Commissioners Court –February 21, 2017
NOTICE OF A MEETING OF THE
COMMISSIONERS COURT OF HAYS COUNTY, TEXAS

This Notice is posted pursuant to the Texas Open Meetings Act. (VERNONS TEXAS CODES ANN. GOV. CODE CH.551). The Hays County Commissioners Court will hold a meeting at **9:00 A.M.** on the **21st day of February, 2017**, in the Hays County Courthouse, Room 301, San Marcos, Texas. An Open Meeting will be held concerning the following subjects:

CALL TO ORDER
INVOCATION
PLEDGE OF ALLEGIANCE - **Pledge of Allegiance to the American Flag & Pledge of Allegiance to the Texas Flag**
ROLL CALL

PUBLIC COMMENTS

At this time **3-MINUTE** comments will be taken from the audience on Non-Agenda related topics. To address the Court, please submit a Public Participation/ Witness Form to the County Clerk. Please Complete the Public Participation/ Witness Form in its Entirety.
NO ACTION MAY BE TAKEN BY THE COURT DURING PUBLIC COMMENTS.

CONSENT ITEMS

The following may be acted upon in one motion.
A Commissioner, the County Judge, or a Citizen may request items be pulled for separate discussion and/or action.

1	4	Approve payments of county invoices. **VILLARREAL-ALONZO**
2	5-11	Approve Commissioners Court Minutes of February 14, 2017. **COBB/GONZALEZ**
3	12-53	Authorize the County Judge to execute a contract with the Department of State Health Services (DSHS) for the FY2018 Immunization/Local Grant Program in the amount of $192,341.00. **INGALSBE/GARZA/HAUFF**
4	54-68	Authorize the County Judge to submit a grant application to the Texas Department of State Health Services (DSHS) for the Tuberculosis Prevention & Control for FY2018 State Funds in the amount of $25,875.00. **COBB/GARZA/HAUFF**
5	69-73	Approve the transfer of a 2008 Dodge Charger and equipment from the Sheriff's Office to Constable Pct. 1. **CUTLER/COBB**
6	74-79	Approve the transfer of a 2008 Dodge Charger and equipment from the Sheriff's Office to Constable Pct. 3. **CUTLER/COBB**
7	80	Authorize the County Judge to execute an agreement with Plateau Land & Wildlife Management in the amount of $2808.24 for annual wildlife management services contract for Dahlstrom Public Access Area. **JONES/GARZA**
8	81	Authorize Commercial OSSF Permit at 2951 FM-2001, Buda, TX 78610. **JONES/MCINNIS**
9	82	Authorize the County Judge to execute a renewal of the Agreement between Hays County and Thomson Reuters related to licensure of legal research software for the District Attorney's Office and the Office of General Counsel. **COBB/KENNEDY/MAU**

ACTION ITEMS

ROADS

10	83	Hold a public hearing to establish traffic regulations (3-way stop) at the intersection of Mesa Verde Drive and Estes Drive in Belterra subdivision. Discussion and possible action to follow. **WHISENANT/BORCHERDING**
11	84	Discussion and possible action to consider the acceptance of the roads into the county road system for Rim Rock subd. Phase 2, Section 5, and release of maintenance bond #PRF9153419mnt-2 in the amount of $79,245.45. **JONES/BORCHERDING**

SUBDIVISIONS

12	85-87	SUB-721 Medlin Creek Ranch Phase 1 (4 Lots). Discussion and possible action to approve final plat. **WHISENANT/HAIRELL**

MISCELLANEOUS

13	88-326	Discussion and possible action to authorize the County Judge to execute an Installation Contract with Performance Services Inc. related to The Energy Efficiency Project and the technical energy audit performed in 2016. **CONLEY/GARZA**
14	327-335	Discussion and possible action to approve a resolution Authorizing the Execution and Delivery of a Public Property Finance Contract with Respect to the Acquisition, Purchase, and Financing of a County Wide Energy Conservation Project; and authorize the County Judge to execute all required documents. **COBB/GARZA**
15	336-351	Discussion and possible action to approve a resolution Authorizing the Financing of a County Wide Energy Conservation Project; and authorize the County Judge to execute all required documents. **COBB/GARZA**
16	352-353	Discussion and possible action to approve payment without issuance of a purchase order for supplies purchased for the County Clerk's office. **COBB/GONZALEZ**
17	354-388	Hold a public hearing to discuss and finalize changes to the Hays County Development Regulations; discussion with staff regarding proposed changes to the Hays County Development Regulations. Possible action may follow in court. **COBB/HAIRELL**
18	389-396	Discussion and possible resolution of the Hays County Commissioners Court regarding the creation of one additional Judicial District Court and one additional County Court-at-Law for Hays County in the upcoming 85th legislative session. **COBB/CONLEY**
19	397-399	Discussion and possible action to authorize the Sheriff's Office to accept the Scope of Work (SOW) from Dynamic Systems, Inc. for a Hot Water Storage Tank replacement at the Jail Facility and amend the budget accordingly. **COBB/CUTLER**
20	400	Discussion and Possible action to authorize the Personal Health Department to offer a salary exception for the Epidemiologist, slot 1142-002 position at the 14th percentile (grade 113) effective March 1, 2017. **INGALSBE/GARZA**

EXECUTIVE SESSIONS

The Commissioners Court will announce it will go into Executive Session, if necessary, pursuant to Chapter 551 of the Texas Government Code, to receive advice from Legal Counsel to discuss matters of land acquisition, litigation, and personnel matters as specifically listed on this agenda. The Commissioners Court may also announce it will go into Executive Session, if necessary, to receive advice from Legal Counsel regarding any other item on this agenda.

21	401	Executive Session pursuant to Sections 551.071 and 551.072 of the Texas Government Code: consultation with counsel and deliberation regarding the purchase, exchange or value of Right of Way along proposed FM110 in Pct. 1. Possible action to follow in open court. **INGALSBE**
22	402	Executive Session pursuant to Sections 551.071 and 551.074 of the Texas Government Code: consultation with counsel and deliberation regarding all individual positions within the County Court-at-Law. Possible action may follow. **CONLEY**
23	403	Executive Session pursuant to Sections 551.071 and 551.072 of the Texas Government Code: consultation with counsel and deliberation regarding the purchase, exchange, lease or value of real property owned by Hays County. Possible action to follow in open court. **COBB**

STANDING AGENDA ITEMS

The Commissioners Court utilizes Standing Agenda Items to address issues that are frequently or periodically discussed in court. This section allows the Court to open the item when a need for discussion arises.

24	Discussion of issues related to the Hays County Jail, and the planning of projects pertaining to the public safety facilities needs within the County. Possible action may follow. **COBB/CUTLER**
25	Discussion and possible action related to the burn ban and/or disaster declaration. **COBB/SMITH/BROWNING**
26	Discussion of issues related to the road bond projects, including updates from Mike Weaver, Prime Strategies, Laura Harris, HNTB and Allen Crozier, HDR. Possible action may follow. **COBB**

ADJOURNMENT

Posted by 5:00 o'clock P.M. on the 17th day of February, 2017

COMMISSIONERS COURT, HAYS COUNTY, TEXAS

CLERK OF THE COURT

Hays County encourages compliance with the Americans with Disabilities Act (ADA) in the conduct of all public meetings. To that end, persons with disabilities who plan to attend this meeting and who may need auxiliary aids such as an interpreter for a person who is hearing impaired are requested to contact the Hays County Judge's Office at (512) 393-2205 as soon as the meeting is posted (72 hours before the meeting) or as soon as practical so that appropriate arrangements can be made. While it would be helpful to receive as much advance notice as possible, Hays County will make every reasonable effort to accommodate any valid request regardless of when it is received. Braille is not available.

AGENDA ITEM REQUEST FORM

Hays County Commissioners Court
Tuesdays at 9:00 AM

Request forms are due in Microsoft Word Format via email by 2:00 p.m. on Wednesday.

AGENDA ITEM

Approve payment of County invoices.

ITEM TYPE	MEETING DATE	AMOUNT REQUIRED
CONSENT	February 21, 2017	

LINE ITEM NUMBER

AUDITOR USE ONLY

AUDITOR COMMENTS:

PURCHASING GUIDELINES FOLLOWED: N/A **AUDITOR APPROVAL:** N/A

REQUESTED BY	SPONSOR	CO-SPONSOR
Auditor's Office	VILLARREAL-ALONZO	N/A

SUMMARY

AGENDA ITEM REQUEST FORM

Hays County Commissioners Court

Tuesdays at 9:00 AM

Request forms are due in Microsoft Word Format via email by 2:00 p.m. on Wednesday.

AGENDA ITEM

Approve Commissioner Court Minutes of February 14, 2017.

ITEM TYPE	MEETING DATE	AMOUNT REQUIRED
CONSENT	February 21, 2017	

LINE ITEM NUMBER

AUDITOR USE ONLY

AUDITOR COMMENTS:

PURCHASING GUIDELINES FOLLOWED: N/A **AUDITOR REVIEW:** N/A

REQUESTED BY	SPONSOR	CO-SPONSOR
Gonzalez	COBB	N/A

SUMMARY

***** *****

STATE OF TEXAS *
COUNTY OF HAYS *

ON THIS THE 14TH DAY OF FEBRUARY A.D., 2017, THE COMMISSIONERS' COURT OF HAYS COUNTY, TEXAS, MET IN REGULAR MEETING. THE FOLLOWING MEMBERS WERE PRESENT, TO-WIT:

ALBERT H. COBB JR	**COUNTY JUDGE**
DEBBIE GONZALES INGALSBE	**COMMISSIONER, PCT. 1**
MARK JONES	**COMMISSIONER, PCT. 2**
WILL CONLEY	**COMMISSIONER, PCT. 3**
RAY O. WHISENANT JR.	**COMMISSIONER, PCT. 4**
CHRISTOPHER ALANIZ	**DEPUTY COUNTY CLERK**

AND THE FOLLOWING PROCEEDINGS WERE HAD, THAT IS:

Judge Cobb gave the invocation and led the court in the Pledge of Allegiance to the United States and Texas flags. Judge Cobb called the meeting to order.

Clerks Note Re: Item #1- *ADOPT A PROCLAMATION DECLARING FEBRUARY, 2017 AS DATING VIOLENCE AWARENESS AND PREVENTION MONTH IN HAYS COUNTY* - **was pulled**

PUBLIC COMMENTS
Sam Brannon- a San Marcos resident and Matt Ocker- a Buda resident spoke.

32245 APPROVE PAYMENTS OF COUNTY INVOICES

A motion was made by Commissioner Whisenant, seconded by Commissioner Jones to approve payments of county invoices in the amount of $1,329,474.28 as presented by the County Auditor. All present voting "Aye". MOTION PASSED

32246 APPROVE COMMISSIONERS COURT MINUTES OF FEBRUARY 7, 2017

A motion was made by Commissioner Whisenant, seconded by Commissioner Jones to approve Commissioners Court Minutes of February 7, 2017. All present voting "Aye". MOTION PASSED

32247 ACCEPT AND APPROVE THE 2016 RACIAL PROFILING REPORT AND THE 2016 ANNUAL ACTIVITY REPORT FROM HAYS COUNTY CONSTABLE OFFICE, PCT. 4

In compliance with Senate Bill 1074-76th regular session of the Texas Legislature amended by House Bill 3389-81st regular session. **A motion was made by Commissioner Whisenant, seconded by Commissioner Jones to accept and approve the 2016 Racial Profiling Report and the 2016 Annual Activity Report from Hays County Constable Office, Pct. 4. All present voting "Aye". MOTION PASSED**

32248 AUTHORIZE THE SHERIFF'S OFFICE TO PURCHASE A MOTOR-ONE WIRELESS MOTOR KIT FOR A HONDA ST1300 MOTORCYCLE

In the FY 2016 budget the Sheriff's Office was approved a replacement motorcycle; it was not received prior to 9/30/2016 and the funds were rolled over to FY 2017. At this time the Sheriff's Office is seeking approval to purchase a motor-one wireless motor kit for this unit. The wireless kit will link to the handheld radio and siren providing officer safety. No additional funds are needed; $695.00 was identified in the Law Enforcement Equipment Operating g/l. **A motion was made by Commissioner Whisenant, seconded by Commissioner Jones to authorize the Sheriff's Office to purchase a motor-one wireless motor kit for a Honda ST1300 motorcycle. All present voting "Aye". MOTION PASSED**

32249 AUTHORIZE THE SHERIFF'S OFFICE TO ACCEPT A DONATION OF $500.00 ISSUED TO THE COMMUNITY OUTREACH DIVISION AND AMEND THE BUDGET ACCORDINGLY

The Sheriff's Office received a donation of $500 from the Unity Church of Wimberley. The Church is requesting for the donation to be split between the following community programs; $300 to Sunshine Kids and $200 to Hays County Citizens Academy. Donated funds will be utilized for supplies and services for each program. Budget Amendment: Increase 052-618-00.4610 Contributions $500.00. Increase 052-618-00.5222 Special

Projects $500.00**. A motion was made by Commissioner Whisenant, seconded by Commissioner Jones to authorize the Sheriff's Office to accept a donation of $500.00 issued to the Community Outreach Division and amend the budget accordingly. All present voting "Aye". MOTION PASSED**

32250 APPROVE SPECIFICATIONS FOR RFQ 2017-P04 MATERIALS TESTING AND TECHNICAL INSPECTIONS, COMMISSIONING SERVICES FOR THE HAYS COUNTY PUBLIC SAFETY BOND PROGRAM AND AUTHORIZE PURCHASING TO SOLICIT FOR QUALIFICATIONS AND ADVERTISE

A motion was made by Commissioner Ingalsbe, seconded by Commissioner Whisenant to approve specifications for RFQ 2017-P04 Materials Testing and Technical Inspections, Commissioning Services for the Hays County Public Safety Bond Program and authorize Purchasing to solicit for qualifications and advertise. All present voting "Aye". MOTION PASSED

32251 APPROVE OUT OF STATE TRAVEL FOR THE COUNTY COURT AT LAW 2 JUDGE AND VETERAN'S COURT TEAM TO ATTEND THE NATIONAL ASSOCIATION OF DRUG COURT PROFESSIONALS CONFERENCE IN WASHINGTON, DC AND AMEND THE BUDGET ACCORDINGLY

The CCL2 Judge requests the Court's authorization for himself and three members of the Veteran's Court Team, to attend the National Association of Drug Court Professionals conference in Washington, DC in July 2017. Funds were budgeted in the CCL2 budget for the Judge to attend and the NADCP conference. The granting agency has approved the VC Team to attend as part of the approved CJD grant budget, utilizing the VC Coordinator's declined medical insurance savings. Grant Budget Amendment: Increase Continuing Education - $5,000. Decrease Medical Insurance - ($5,000). **A motion was made by Commissioner Ingalsbe, seconded by Commissioner Whisenant to approve out of state travel for the County Court at Law 2 Judge and Veteran's Court Team to attend the National Association of Drug Court Professionals conference in Washington, DC and amend the budget accordingly. All present voting "Aye". MOTION PASSED**

32252 AUTHORIZE THE RENEWAL OF THE COMPOUNDING SERVICE AGREEMENT BETWEEN B AND J PHARMACY AND HAYS COUNTY LOCAL HEALTH DEPARTMENT FOR SERVICES RELATED TO HCLHD-TB PROGRAM FEBRUARY 1, 2017

These services will run from February 1, 2017. This agreement is written to automatically renew each fiscal year for a period of 5 years. **A motion was made by Commissioner Ingalsbe, seconded by Commissioner Whisenant to authorize the renewal of the Compounding service agreement between B and J Pharmacy and Hays County Local Health Department for services related to HCLHD-TB program February 1, 2017. All present voting "Aye". MOTION PASSED**

32253 AUTHORIZE THE RENEWAL OF THE COMPOUNDING SERVICE AGREEMENT BETWEEN MED-PARK PHARMACY AND HAYS COUNTY LOCAL HEALTH DEPARTMENT FOR SERVICES RELATED TO HCLHD-TB PROGRAM FEBRUARY 1, 2017

These services will run from February 1, 2017. This agreement is written to automatically renew each fiscal year for a period of 5 years. **A motion was made by Commissioner Ingalsbe, seconded by Commissioner Whisenant to authorize the renewal of the Compounding service agreement between Med-Park Pharmacy and Hays County Local Health Department for services related to HCLHD-TB program February 1, 2017. All present voting "Aye". MOTION PASSED**

32254 AUTHORIZE THE COUNTY JUDGE TO EXECUTE A CONTRACT WITH THE DEPARTMENT OF STATE HEALTH SERVICES (DSHS) FOR THE FY2018 PUBLIC HEALTH EMERGENCY PREPAREDNESS (PHEP) PROGRAM IN THE AMOUNT OF $122,790.00

On January 10, 2017, the Commissioners Court authorized submission of a grant application to the Department of Health Services (DSHS), Public Health Emergency Preparedness (PHEP) program. Funds are used to support the salary and benefits of the Emergency Preparedness Coordinator and SNS Coordinator in the Hays County Local Health Department. This grant requires a 10% match ($12,279.00) with match met through in-kind contributions from the health department operating funds for a total project amount of $135,069.00. The term for this grant is July 1, 2017 through June 30, 2018. The contract will be signed electronically. **A motion was made by Commissioner Whisenant, seconded by Commissioner Ingalsbe to authorize the County Judge to execute a contract with the Department of State Health Services (DSHS) for the FY2018 Public Health**

Emergency Preparedness (PHEP) Program in the amount of $122,790.00. All present voting "Aye". MOTION PASSED

32255 AUTHORIZE THE COUNTY JUDGE TO EXECUTE THE RESOLUTION AND SUBMIT A GRANT APPLICATION TO THE GOVERNOR'S OFFICE, CRIMINAL JUSTICE DIVISION FOR FUNDING TO SUPPORT THE HAYS COUNTY VETERANS COURT IN THE AMOUNT OF $77,584.00

On December 17, 2013 the Commissioners Court authorized creation of the Hays County Veterans Court, to be placed under the jurisdiction of County Court-at-Law #2. The Veterans Court provides a voluntary intensive treatment program for those military veterans who suffer from combat-related trauma and have been diagnosed with mental health issues, PTSD, or TBI, and have been arrested for a non-violent offense. The Court began on a pilot basis in May, 2014 and funding from the Governor's Office, Criminal Justice Division (CJD) – Specialty Courts program was received in September, 2014 for operation of the Court. This grant application to the same program requests support to continue operations of the Court, and includes funding for a Court Coordinator, travel and training expenses, office supplies, and contractual services including drug/alcohol testing and monitoring. Funding has been capped by CJD to the amount received last year minus any new ineligible items. The contract services for the Defense Attorney that were funded under the previous grant are now considered an ineligible cost, and the requested grant amount has been reduced accordingly. The grant must be submitted in electronic format by February 20, 2017 and the project period, if awarded, is from September 1, 2017 through August 31, 2018. No matching funds are required for the grant. **A motion was made by Commissioner Whisenant, seconded by Commissioner Ingalsbe to authorize the County Judge to execute the Resolution and submit a grant application to the Governor's Office, Criminal Justice Division for funding to support the Hays County Veterans Court in the amount of $77,584.00. All present voting "Aye". MOTION PASSED**

32256 APPROVE OUT OF STATE TRAVEL FOR THE DIRECTOR OF DEVELOPMENT AND COMMUNITY SERVICES FOR THE 2017 NATIONAL ENVIRONMENTAL HEALTH ASSOCIATION'S ANNUAL EDUCATIONAL CONFERENCE BEING HELD JULY 10-13 IN GRAND RAPIDS, MI

NEHA's AEC is an opportunity to obtain real-world information and expertise in the field of environmental health. The education and skills acquired would prove beneficial in strengthening the daily operations of the Development and Community Services Department. **A motion was made by Commissioner Whisenant, seconded by Commissioner Ingalsbe to approve out of state travel for the Director of Development and Community Services for the 2017 National Environmental Health Association's Annual Educational Conference being held July 10-13 in Grand Rapids, MI. All present voting "Aye". MOTION PASSED**

32257 CALL FOR A PUBLIC HEARING ON FEBRUARY 28, 2017 TO ESTABLISH TRAFFIC REGULATIONS ON EAGLE NEST DRIVE, LEWIS LANE & LONGLEY TRACE IN CIMARRON PARK SUBDIVISION NEAR FM 1626

This action will be to establish a new stop sign on Eagle Nest Drive at Lewis Lane, a new stop sign on Longley Trace at Lewis Lane, and to remove an existing stop sign on Eagle Nest Drive at Longley Trace as a result of the completion of construction on FM 1626 and the new orientation of the roads within the subdivision (see map). **A motion was made by Commissioner Jones, seconded by Commissioner Whisenant to call for a public hearing on February 28, 2017 to establish traffic regulations on Eagle Nest Drive, Lewis Lane & Longley Trace in Cimarron Park subdivision near FM 1626. All present voting "Aye". MOTION PASSED**

32258 AUTHORIZE THE COUNTY JUDGE TO EXECUTE AN ADVANCE FUNDING COMMITMENT AGREEMENT BETWEEN HAYS COUNTY AND FLINT HILLS RESOURCES CENTRAL TEXAS, LLC RELATED TO A LEFT TURN LANE TO BE LOCATED AT THE ENTRANCE OF 2361 JACK C. HAYS TRAIL, BUDA, TEXAS 78610

A motion was made by Commissioner Jones, seconded by Commissioner Ingalsbe to authorize the County Judge to execute an Advance Funding Commitment Agreement between Hays County and Flint Hills Resources Central Texas, LLC related to a left turn lane to be located at the entrance of 2361 Jack C. Hays Trail, Buda, Texas 78610. All present voting "Aye". MOTION PASSED

32259 AUTHORIZE THE COUNTY JUDGE TO EXECUTE A PROFESSIONAL SERVICES AGREEMENT WITH CHAPARRAL PROFESSIONAL LAND SURVEYING, INC. FOR SURVEYING SERVICES NECESSARY FOR THE ACQUISITION OF THE REMAINING RIGHT OF WAY REQUIRED FOR THE DACY LANE PHASE II PROJECT

Dacy Lane was identified as a County roadway warranting safety improvements as part of the 2008 Priority Road Bond Program. The project scope described in the bond program included the initial engineering studies required to begin environmental clearance as well as ROW preservation. 27BIn addition, in November of 2016, Hays County voters approved Proposition 2 of the proposed 2016 Bond Program for road improvements throughout the County. Dacy Lane, including ROW acquisition, design and construction, was identified within this program. Therefore, funding is available for ROW procurement once the identified savings in the 2008 County Road Bond Program have been fully utilized. This Agreement is to complete the survey necessary for the acquisition of the remaining parcels on the northern end of the project between Windy Hill Road and Hillside Terrace. This effort was kept separate from the acquisition services being provided by Lockwood, Andrews and Newnam, Inc. to remove the need for the surveyor to charge sales tax for these services as well as remove sub-consultant management fees. The Professional Services Agreement is attached for the Court's review and approval. **A motion was made by Commissioner Jones, seconded by Commissioner Ingalsbe to authorize the County Judge to execute a Professional Services Agreement with Chaparral Professional Land Surveying, Inc. for surveying services necessary for the acquisition of the remaining right of way required for the Dacy Lane Phase II project. All present voting "Aye". MOTION PASSED**

32260 SUB-721 MEDLIN CREEK RANCH PHASE 1 (4 LOTS). DISCUSSION AND POSSIBLE ACTION TO APPROVE PRELIMINARY PLAN

The proposed Medlin Creek Ranch is a proposed 4 lot subdivision located off of W Fitzhugh Road in Precinct 4. The subdivision will be served by individual water wells and wastewater treatment will be accomplished by individual on-site sewage facilities. Hays County Planner Caitlyn Hairell spoke and staff gave recommendation. **A motion was made by Commissioner Whisenant, seconded by Commissioner Ingalsbe to approve preliminary plan SUB-721 Medlin Creek Ranch Phase 1 (4 Lots). All present voting "Aye". MOTION PASSED**

32261 SUB-651 REUNION RANCH PHASE 2, SECTION 5 (26 LOTS). DISCUSSION AND POSSIBLE ACTION TO APPROVE FINAL PLAT; ACCEPT FISCAL SURETY FOR THE CONSTRUCTION OF STREET AND DRAINAGE IMPROVEMENTS IN THE AMOUNT OF $413,225.50 (BOND # SU1143656)

This section includes 26 single family residential lots. All lots will be served by the Reunion Ranch Water Control and Improvement District. Hays County Planner Caitlyn Hairell spoke. **A motion was made by Commissioner Whisenant, seconded by Commissioner Jones to approve final plat; accept fiscal surety for the construction of street and drainage improvements in the amount of $413,225.50 (Bond # SU1143656) SUB-651 Reunion Ranch Phase 2, Section 5 (26 lots). All present voting "Aye". MOTION PASSED**

32262 SUB-630 SHADOW CREEK PHASE 8, SECTION 2 (78 LOTS). DISCUSSION AND POSSIBLE ACTION TO APPROVE FINAL PLAT; ACCEPT CONSTRUCTION BOND NO. K0956889A FOR THE CONSTRUCTION OF STREET AND DRAINAGE IMPROVEMENTS IN THE AMOUNT OF $969,723.55

The preliminary plan for the Shadow Creek Subdivision was originally approved on June 15, 2004 as a 1440 lot subdivision located off of Windy Hill Road in Precinct 2. This section includes 76 single-family residential lots and 2 greenspace/drainage lots. All lots will be served by GoForth Special Utility District and sewer provided by North Hays County Municipal Utility District Number 1. Hays County Planner Caitlyn Hairell spoke. **A motion was made by Commissioner Jones, seconded by Commissioner Ingalsbe to approve final plat; accept Construction Bond No. K0956889A for the construction of street and drainage improvements in the amount of $969,723.55 for SUB-630 Shadow Creek Phase 8, Section 2 (78 lots). All present voting "Aye". MOTION PASSED**

32263 AUTHORIZE THE COUNTY JUDGE TO EXECUTE A PROFESSIONAL SERVICES AGREEMENT WITH VISIONBEE, LLC, DBA BEE®, FOR THE REVIEW OF THE UTILITY ASSESSMENT REPORT, MEASUREMENT & VERIFICATION PLAN AND THE SAVINGS ESTIMATION CALCULATIONS PREPARED BY PERFORMANCE SERVICES INC. IN CONNECTION WITH THE PROPOSED ENERGY SAVINGS PERFORMANCE CONTRACT

Bee® has been selected by Hays County as an independent third party to review various documents and the savings estimation calculations prepared by Performance Services Inc. in relation to the proposed Energy Savings Performance Contract. The contractor will provide a letter reporting findings from the review to Hays County once their review has been completed. **A motion was made by Commissioner Conley, seconded by Commissioner Whisenant to authorize the County Judge to execute a professional services agreement with VisionBee, LLC, dba Bee®, for the review of the Utility Assessment Report, Measurement &**

Verification Plan and the savings estimation calculations prepared by Performance Services Inc. in connection with the proposed Energy Savings Performance Contract. All present voting "Aye". MOTION PASSED

32264 AUTHORIZE THE COUNTY JUDGE TO EXECUTE A BUSINESS ASSOCIATES AGREEMENT AND SUBSCRIPTION AGREEMENT WITH VIRTRU FOR THE LOCAL HEALTH DEPARTMENT RELATED TO ENCRYPTED EMAIL AND FILE PROTECTION AND AMEND THE BUDGET ACCORDINGLY

The HIPAA Privacy and Security Rules require that covered entities enter into contracts with their business associates to ensure that the business associate will appropriately safeguard protected health information. The agreement protects personal health information in accordance with HIPAA guidelines. HIPAA requires that agreements be in writing, whether in the form of a contract or other agreement between the covered entity and the business associate. Approval and execution of the Business Associates Agreement ensures paper and electronic records are handled in accordance with all applicable rules. Additionally, the Security Rules requires a covered entity implement technical policies and procedures to limit access, destruction, or alteration of protected health information being transmitted electronically. The Security Rule requires that a covered entity implement technical measures to guard against unauthorized access to protected health information that is being transmitted over an electronic communications network (45 CFR 164.312 (e)). This includes having integrity controls and encryption. The attached Subscription Agreement ensures protected health information is transmitted in accordance with all applicable rules and includes the proposal for the software licenses needed. Attachments: Virtru Business Associate Agreement; Virtru Subscription Agreement. Budget Amendment: Local Health Department; Increase 120-675-00.5429; Decrease 120-675-00.5391. Clint Garza, Director of Development spoke. **A motion was made by Commissioner Ingalsbe, seconded by Commissioner Whisenant to authorize the County Judge to execute a Business Associates Agreement and Subscription Agreement with Virtru for the Local Health Department related to encrypted email and file protection and amend the budget accordingly. All present voting "Aye". MOTION PASSED**

APPOINTMENT OF COMMISSIONERS TO THE BOARD OF THE NEWLY-CREATED EMERGENCY SERVICES DISTRICT NO.9 (ESD#9), AND MATTERS RELATED THERETO

Chief of Staff, Lon Shell and Chief David Smith of San Marcos Hays County EMS spoke on the matter. No action was taken. Creation of ESD#9 was authorized during the November 2016 election. Pursuant to 775.034 of the Texas Health and Safety Code, the Commissioners Court is authorized to appoint the 5-person board. Other matters related to ESD#9 may be discussed during this item.

Clerks Note Re: Item #23- *EXECUTIVE SESSION PURSUANT TO SECTIONS 551.071 AND 551.072 OF THE TEXAS GOVERNMENT CODE: CONSULTATION WITH COUNSEL AND DELIBERATION REGARDING THE PURCHASE, EXCHANGE OR VALUE OF RIGHT OF WAY ALONG PROPOSED FM110 IN PCT. 1. POSSIBLE ACTION TO FOLLOW IN OPEN COURT-* **was pulled**

Clerks Note Re: Item #24- *DISCUSSION OF ISSUES RELATED TO THE HAYS COUNTY JAIL, AND THE PLANNING OF PROJECTS PERTAINING TO THE PUBLIC SAFETY FACILITIES NEEDS WITHIN THE COUNTY. POSSIBLE ACTION MAY FOLLOW -* **was pulled**

32265 DISCUSSION AND POSSIBLE ACTION RELATED TO THE BURN BAN AND/OR DISASTER DECLARATION. COBB/SMITH/BROWNING

Hays County Fire Marshal Clint Browning gave recommendation to lift burn ban. **A motion was made by Commissioner Ingalsbe, seconded by Commissioner Whisenant to lift the current burn ban. All present voting "Aye". MOTION PASSED**

Clerks Note Re: Item #26- *DISCUSSION OF ISSUES RELATED TO THE ROAD BOND PROJECTS, INCLUDING UPDATES FROM MIKE WEAVER, PRIME STRATEGIES, LAURA HARRIS, HNTB AND ALLEN CROZIER, HDR. POSSIBLE ACTION MAY FOLLOW* **- was pulled**

ADJOURNMENT

A motion was made by Commissioner Jones, seconded by Commissioner Whisenant to adjourn court at 10:00 a.m.

I, LIZ Q. GONZALEZ, COUNTY CLERK and EXOFFICIO CLERK OF THE COMMISSIONERS' COURT, do hereby certify that the foregoing contains a true and accurate record of the proceedings had by the Hays County Commissioners' Court on February 14, 2017.

***** *****

LIZ Q GONZALEZ, COUNTY CLERK AND EXOFFICIO CLERK OF THE COMMISSIONERS' COURT OF HAYS COUNTY, TEXAS

AGENDA ITEM REQUEST FORM

Hays County Commissioners Court

Tuesdays at 9:00 AM

Request forms are due in Microsoft Word Format via email by 2:00 p.m. on Wednesday.

AGENDA ITEM

Authorize the County Judge to execute a contract with the Department of State Health Services (DSHS) for the FY2018 Immunization/Local Grant Program in the amount of $192,341.00.

ITEM TYPE	MEETING DATE	AMOUNT REQUIRED
CONSENT	February 21, 2017	

LINE ITEM NUMBER

AUDITOR USE ONLY

AUDITOR COMMENTS:

PURCHASING GUIDELINES FOLLOWED: N/A **AUDITOR REVIEW:** MARISOL VILLARREAL-ALONZO

REQUESTED BY	SPONSOR	CO-SPONSOR
Garza/Hauff	INGALSBE	N/A

SUMMARY

On January 10, 2017, the Commissioners Court approved to submit a renewal grant application to the Texas Department of State Health Services (DSHS) for the FY2018 Immunization Program. Funds will be utilized to provide support of the salary and benefits of the staffs involved in this program. The grant period begins on September 1, 2017 through August 31, 2018. The contract is signed electronically.

DocuSign Envelope ID: D0F1C0DA-D6A3-4FA9-9404-C74F1B3561FF

SIGNATURE DOCUMENT FOR
DEPARTMENT OF STATE HEALTH SERVICES
CONTRACT NO. 537-18-0059-00001
UNDER THE
IMMUNIZATION/LOCALS GRANT PROGRAM

I. PURPOSE

The Department of State Health Services ("System Agency"), a pass-through entity, and Hays County ("Grantee") (each a "Party" and collectively the "Parties") enter into the following grant contract to provide funding for immunization services (the "Contract").

II. LEGAL AUTHORITY

This Contract is authorized by and in compliance with 42 USC 247b; 42 USC 243; 42 USC 300aa-3, 300aa-25, and 300aa-26; 42 USC 1396s; Chapter 791 of the Texas Government Code, and Chapters 81, 161 and 1001 of the Texas Health and Safety Code.

II. DURATION

The Contract is effective on September 1, 2017 and terminates on August 31, 2018, unless renewed or terminated pursuant to the terms and conditions of the Contract. The System Agency, at its own discretion, may extend this Contract subject to terms and conditions mutually agreeable to both Parties.

III. BUDGET

The total amount of this Contract will not exceed **ONE HUNDRED NINETY-TWO THOUSAND THREE HUNDRED FORTY-ONE DOLLARS ($192,341.00)**. The System Agency will act as a pass-through entity for up to **EIGHTY-FIVE THOUSAND FIVE HUNDRED SEVENTY-NINE DOLLARS ($85,579.00)**. The remainder, **ONE HUNDRED SIX THOUSAND SEVEN HUNDRED SIXTY-TWO DOLLARS ($106,762.00)**, will be provided from state funds. All expenditures under the Contract will be in accordance with **ATTACHMENT B, BUDGET**.

IV. CONTRACT REPRESENTATIVES

The following will act as the Representative authorized to administer activities under this Contract on behalf of their respective Party.

System Agency
Department of State Health Services
1100 West 49th Street
Austin, Texas 78756
Attention: Tray Kirkpatrick
tray.kirkpatrick@dshs.state.tx.us

DocuSign Envelope ID: D0F1C0DA-D6A3-4FA9-9404-C74F1B3561FF

Grantee
Hays County
712 S. Stagecoach Trail, Suite 1071
San Marcos, Texas 78666
Attention: County Judge Bert Cobb, M.D.
bert.cobb@co.hays.tx.us

LEGAL NOTICES

Any legal notice required under this Contract shall be deemed delivered when deposited by the System Agency either in the United States mail, postage paid, certified, return receipt requested; or with a common carrier, overnight, signature required, to the appropriate address below:

System Agency
Department of State Health Services
Attention: Lisa Hernandez
1100 W. 49th Street, MC 1911
Austin, TX 78756

Grantee
Hays County
712 S. Stagecoach Trail, Suite 1071
San Marcos, Texas 78666
Attention: County Judge Bert Cobb, M.D.
bert.cobb@co.hays.tx.us

Notice given by Grantee will be deemed effective when received by the System Agency. Either Party may change its address for notice by written notice to the other Party.

V. ADDITIONAL GRANT INFORMATION

Federal Award Identification Number (FAIN): H23IP000773
Federal Award Date: 9/08/2016
Name of Federal Awarding Agency: Centers for Disease Control and Prevention
CFDA Name and Number: Immunization and Vaccines for Children Program 93.268
Awarding Official Contact Information: SeQuoyah Hill, Office: (770) 488-8350; email: kwj3@cdc.gov
DUNS: 097494884

SIGNATURE PAGE FOLLOWS

DocuSign Envelope ID: D0F1C0DA-D6A3-4FA9-9404-C74F1B3561FF

SIGNATURE PAGE FOR SYSTEM AGENCY CONTRACT NO. 537-18-0059-00001

DEPARTMENT OF STATE HEALTH SERVICES	**GRANTEE**
Name: Janna Zumbrun	Name: Bert Cobb, M.D.
Title: Associate Commissioner Disease Control and Prevention	Title: County Judge
Date of execution:_____	Date of execution:_____

THE FOLLOWING ATTACHMENTS TO SYSTEM AGENCY CONTRACT NO. 537-18-0059-00001 ARE HEREBY INCORPORATED BY REFERENCE:

ATTACHMENT A - STATEMENT OF WORK
ATTACHMENT B - BUDGET
ATTACHMENT C - UNIFORM TERMS AND CONDITIONS
ATTACHMENT D - SUPPLEMENTAL & SPECIAL CONDITIONS
ATTACHMENT E - FEDERAL ASSURANCES AND CERTIFICATIONS
ATTACHMENT F - FFATA

DocuSign Envelope ID: D0F1C0DA-D6A3-4FA9-9404-C74F1B3561FF

ATTACHMENT A
STATEMENT OF WORK

I. GRANTEE RESPONSIBILITIES

Grantee will:

A. Implement and operate an immunization program for children, adolescents, and adults, with special emphasis on accelerating interventions to improve the immunization coverage of children three (3) years of age or younger (birth to 35 months of age). Contractor shall incorporate traditional and non-traditional systematic approaches designed to eliminate barriers, expand immunization capacity, and establish uniform operating policies, as described herein.

B. Be enrolled as a provider in the Texas Vaccines for Children (TVFC) and the Adult Safety (ASN) Programs by the effective date of this Program Attachment. This includes a signed *Deputization Addendum Form (E6-102)* and adherence to the TVFC Operations Manual and associated TVFC policy guidelines provided by the DSHS Immunization Unit (located at http://www.dshs.state.tx.us/immunize/tvfc/tvfc_manual.shtm).

C. Comply with written policies and procedures provided by DSHS in managing vaccines supplied through the ASN and TVFC Programs, including guidelines for proper storage, handling, and safeguarding of vaccines in the event of natural disaster. Contractor shall comply with all requirements laid out in the final, approved Work Plan (Exhibit A).

1. Contractor will use the current vaccine management system as described in the *TVFC Operations Manual.*

2. Contractor will notify ASN and TVFC providers of changes to vaccine storage and handling, vaccine management reporting, and present updates and training to providers, as requested by DSHS.

3. Contractor will plan and implement community-based activities and collaborations to accomplish the required tasks as specified in the final, approved Work Plan (Exhibit A).

D. Report all notifiable conditions as specified in Texas Administrative Code (TAC) Title 25, Part I §§ 97.1-97.6 and §§ 97.101-97.102, and as otherwise required by law.

E. Report all vaccine adverse event occurrences in accordance with the 1986 National Childhood Vaccine Injury Act (NCVIA) 42 U.S.C. § 300aa-25 (located at http://vaers.hhs.gov/ or 1-800-822-7967).

F. Inform and educate the public about vaccines and vaccine-preventable diseases, as described in the *DSHS Immunization Contractors Guide for Local Health Departments* (located at http://www.dshs.state.tx.us/immunize/docs/contractor/E11-13985_FY2018_ContractorsGuide.pdf).

DocuSign Envelope ID: D0F1C0DA-D6A3-4FA9-9404-C74F1B3561FF

G. Conduct outreach and collaborative activities with American Indian tribes located within the boundaries of the contractor's jurisdiction.

H. Work to promote a health care workforce within the Local Health Department's (LHDs) service area (including Contractor's staff) that is knowledgeable about vaccines, vaccine safety, vaccine-preventable diseases, and delivery of immunization services.

I. Not deny vaccinations to recipients because they do not reside within Contractor's jurisdiction or because of an inability to pay an administration fee.

J. Comply with all applicable federal and state regulations and statutes, including but not limited to:

1. Human Resources Code §42.043, VTCA;
2. Education Code §§38.001-38.002, VTCA;
3. Health and Safety Code §§12.032, 81.023, and 161.001-161.009, VTCA;
4. TAC Title 25, Chapter 97;
5. TAC Title 25, Chapter 96;
6. TAC Title 25, Chapter 100;
7. 42 USC §§247b and 300 aa-25;
8. Omnibus Budget Reconciliation Act of 1993, 26 USC §4980B.

K. Comply with current applicable state and federal standards, policies and guidelines, including but not limited to *DSHS's Standards for Public Health Clinic Services*, revised August 31, 2004 (located at http://www.dshs.state.tx.us/qmb/default.shtm#public).

L. Be responsible for identification and case management of all surface antigen (HBsAg)-positive pregnant women. Contractor shall ensure timely newborn post exposure prophylaxis (PEP) with hepatitis B vaccine and hepatitis B immune globin (HBIG), timely completion of doses two and three of hepatitis B vaccine, and timely completion of post-vaccination serologic testing (PVST).

M. Be responsible for conducting outreach regarding vaccinations for children (19 through 35 months of age in the Contractor's jurisdiction) included on the list distributed to Contractor by the ImmTrac Group at DSHS. Lists are distributed through ImmTrac at the start of each quarterly reporting period (September 01, 2017; December 01, 2017; March 01, 2018; and June 01, 2018).

N. Be responsible for conducting outreach to 17-year-olds included on the lists distributed to the Contractor by the ImmTrac Group at DSHS to explain the lifetime registry and obtain their consent to remain in ImmTrac as an adult. Lists are distributed on October 1, 2017; December 1, 2017; February 1, 2018; April 1, 2018; June 1, 2018; and August 1, 2018.

DocuSign Envelope ID: D0F1C0DA-D6A3-4FA9-9404-C74F1B3561FF

O. Be responsible for conducting outreach to new ImmTrac providers who have logged into ImmTrac within 30 days of registering. Lists of these providers are distributed at the beginning of each month.

P. Be responsible for conducting outreach to existing ImmTrac providers that have not logged in into ImmTrac in the last 90 days. Lists are distributed on September 1, 2017; November 1, 2017; January 1, 2018; March 1, 2018; May 1, 2018; and July 1, 2018.

Q. Receive written approval from DSHS before varying from applicable policies, procedures, protocols, and/or work plans, and must update and disseminate its implementation documentation to its staff involved in activities under this contract within forty-eight (48) hours of making approved changes.

R. Review monthly contract funding expenditures and salary savings from any contract-paid staff vacancies and revise spending plan to ensure that all funds will be properly expended under this contract before the end of the contract term on August 31, 2018.

S. Send at least one representative to Immunization Unit mandatory meetings held in Austin, including the 1) Immunization Unit local health department held in the fall of every year and the 2) TVFC Annual Training held in January/February of every year. Additional mandatory meetings may be required during the contract term.

T. Submit out of state travel requests to the Immunization Unit for approval when utilizing contract funds or program income.

U. Agree DSHS reserves the right, where allowed by legal authority, to redirect funds in the event of financial shortfalls. DSHS will monitor Contractor's expenditures on a monthly basis. If expenditures are below what is projected in Contractor's total Program Attachment amount, Contractor's budget may be subject to a decrease for the remainder of the Contract term. Vacant positions existing after ninety (90) days may result in a decrease in funds.

V. The following performance measure(s) will be used, in part, to assess Contractor's effectiveness in providing the services described in this Program Attachment, without waiving the enforceability of any of the terms of the Contract.

AA. Investigate and document, in accordance with *DSHS Emerging and Acute Infectious*
1. *Disease Investigation Guidelines* (located at
2. http://www.dshs.state.tx.us/idcu/investigation/conditions/) and *NBS Data Entry Guidelines*, at least 90% of confirmed or probable reportable vaccine-preventable disease cases within thirty (30) days of initial report to public health.

BB. Complete 100% of the follow-up activities, designated by DSHS, for TVFC provider quality assurance site visits assigned by DSHS.

DocuSign Envelope ID: D0F1C0DA-D6A3-4FA9-9404-C74F1B3561FF

CC. Ship overstocked vaccines and vaccines approaching expiration to alternate providers for immediate use when instructed to do so by the DSHS Health Service Region (HSR) Immunization Program Manager to avoid vaccine waste. Contractor is responsible for covering the cost to ship overstocked vaccines and vaccines approaching expiration.

DD. Contact and provide case management to 100% of the number of hepatitis B surface antigen-positive pregnant women identified.

EE. Contact 3% or 250 children (whichever is more) per each Full Time Equivalent (FTE) contract employee position, who are not up-to-date on their immunizations according to the ImmTrac-generated client list provided to the contractor by DSHS at the beginning of each reporting period.

FF. Perform outreach and education activities targeting adolescents 14 to 18 years of age and their parents via health-care providers, health-care clinics, hospitals, and any other health-care facility providing health care to adolescents 14 to 18 years of age to satisfy Texas Health and Safety Code Chapter 161, Subsection A, Section 161.0095 requirements. Outreach and education activities must focus on the immunization registry and the option for an individual who is 18 years of age or older to consent to having their immunization records stored within the immunization registry. Additional outreach and educational activities may focus on high schools, colleges, and universities.

GG. Participate in at least one collaborative meeting concerning tribal health issues, concerns, or needs with American Indian tribal members during the contract term if American Indian tribes are in their jurisdiction.

HH. Report outreach done, and collaborative efforts made, with the American Indian tribes in the contractor's jurisdiction.

II. Review 100% of monthly biological reports, vaccine orders (when applicable), and temperature recording forms for accuracy to ensure the vaccine supply is appropriately maintained and within established maximum stock levels. Review and approval for vaccines orders (when applicable) must be documented in the Electronic Vaccine Inventory (EVI) system.

JJ. Complete 100% of child-care facility and Head Start center assessments, in accordance with the *Immunization Population Assessment Manual,* as assigned by the DSHS Immunization Unit.

KK. Complete 100% of public and private school assessments, retrospective surveys, and validation surveys, in accordance with the *Immunization Population Assessment Manual,* as assigned by DSHS.

LL. Report number of doses administered to underinsured children monthly, as directed by DSHS.

DocuSign Envelope ID: D0F1C0DA-D6A3-4FA9-9404-C74F1B3561FF

MM. Report the number of unduplicated underinsured clients served, as directed by DSHS.

W. Utilize the Assessment, Feedback, Incentives, and eXchange (AFIX) on-line tool and methodology to assess immunization practices and coverage rates for all sub-contracted entities and non-local health department clinics. Immunization provider coverage rates will be generated using the Comprehensive Clinic Assessment Software Application (CoCASA), as specified by DSHS.

X. Utilize the Centers for Disease Control and Prevention (CDC) Provider Education, Assessment, and Reporting (PEAR) system and directly enter data into PEAR to document TVFC compliance site-visits for all sub-contracted entities and non-local health department clinics. The Contractor shall submit the final assessment results in the PEAR system within twenty-four (24) hours of conducting the visit.

Y. Utilize the CDC PEAR system and directly enter data into PEAR to document TVFC unannounced storage and handling visits conducted at TVFC provider offices. The Contractor shall submit the final unannounced storage and handling visit results in the PEAR system within twenty-four (24) hours of conducting the visit.

Z. Required to complete and submit Immunization Inter-Local Agreement (ILA) Quarterly Report form, utilizing the format provided by the DSHS Immunization Unit and available at http://www.dshs.state.tx.us/immunize/providers.shtm, by the report due date.

Report Type	Reporting Period	Report Due Date
Programmatic	09/1/2017 to 11/30/2017	12/29/2017
Programmatic	12/1/2017 to 02/28/2018	4/01/2018
Programmatic	03/1/2018 to 05/30/2018	7/01/2018
Programmatic	06/1/2018 to 08/31/2018	10/01/2018

Contractors LHD ILA Quarterly Reports should be submitted electronically to dshsimmunizationcontracts@dshs.state.tx.us according to the time frames stated above.

II. PERFORMANCE MEASURES

The System Agency will monitor the Grantee's performance of the requirements in Attachment A and compliance with the Contract's terms and conditions.

III. INVOICE AND PAYMENT

A. Grantee will request monthly payments using the State of Texas Purchase Voucher (Form B-13) at http://www.dshs.texas.gov/grants/forms.shtm. Voucher and any

DocuSign Envelope ID: D0F1C0DA-D6A3-4FA9-9404-C74F1B3561FF

supporting documentation will be mailed or submitted by fax or electronic mail to the address/number below.

Department of State Health Services
Claims Processing Unit, MC 1940
1100 West 49th Street
P.O. Box 149347
Austin, TX 78714-9347
FAX: (512) 458-7442
EMAIL: invoices@dshs.state.tx.us

B. Grantee will be paid on a cost reimbursement basis and in accordance with the Budget in Attachment B of this Contract.

DocuSign Envelope ID: D0F1C0DA-D6A3-4FA9-9404-C74F1B3561FF

ATTACHMENT B
BUDGET SUMMARY

Organization Name: Hays County

Program ID: IMM/LOCALS

Contract Number: **537-18-0059-00001**

Budget Categories

Budget Categories	**DSHS Funds Requested**	**Cash Match**	**In Kind Match Contribution**	**Category Total**
Personnel	$124,018.00			$124,018.00
Fringe Benefits	$58,323.00			$58,323.00
Travel	$0.00			$0.00
Equipment	$0.00			$0.00
Supplies	$0.00			$0.00
Contractual	$10,000.00			$10,000.00
Other	$0.00			$0.00
Total Direct Costs	$192,341.00			$192,341.00
Indirect Costs	$0.00			$0.00
Totals	$192,341.00		$0.00	$192,341.00

DocuSign Envelope ID: D0F1C0DA-D6A3-4FA9-9404-C74F1B3561FF

HHSC Uniform Terms and Conditions Version 2.13
Published and Effective: July 15, 2016
Responsible Office: Chief Counsel

Health and Human Services Commission

HHSC Uniform Terms and Conditions - Grant

Version 2.13

DocuSign Envelope ID: D0F1C0DA-D6A3-4FA9-9404-C74F1B3561FF

TABLE OF CONTENTS

ARTICLE I. DEFINITIONS AND INTERPRETIVE PROVISIONS 4
1.01 Definitions 4
1.02 Interpretive Provisions 5
ARTICLE II Payment Methods and Restrictions 6
2.01 Payment Methods 6
2.02 Final Billing Submission 6
2.03 Financial Status Reports (FSRs) 7
2.04 Debt to State and Corporate Status 7
2.05 Application of Payment Due 7
2.06 Use of Funds 7
2.07 Use for Match Prohibited 7
2.08 Program Income 7
2.09 Nonsupplanting 8
ARTICLE III. STATE AND FEDERAL FUNDING 8
3.01 Funding 8
3.02 No debt Against the State 8
3.03 Debt to State 8
3.04 Recapture of Funds 8
ARTICLE IV Allowable Costs and Audit Requirements 9
4.01 Allowable Costs. 9
4.02 Independent Single or Program-Specific Audit 10
4.03 Submission of Audit 10
Article V AFFIRMATIONS, ASSURANCES AND CERTIFICATIONS 11
5.01 General Affirmations 11
5.02 Federal Assurances 11
5.03 Federal Certifications 11
ARTICLE VI OWNERSHIP AND INTELLECTUAL PROPERTY 11
6.01 Ownership 11
6.02 Intellectual Property 11
ARTICLE VII RECORDS, AUDIT, AND DISCLOSURE 11
7.01 Books and Records 11
7.02 Access to records, books, and documents 12

DocuSign Envelope ID: D0F1C0DA-D6A3-4FA9-9404-C74F1B3561FF

7.03 Response/compliance with audit or inspection findings 12
7.04 SAO Audit 12
7.05 Confidentiality 13
7.06 Public Information Act 13
ARTICLE VIII CONTRACT MANAGEMENT AND EARLY TERMINATION 13
8.01 Contract Management 13
8.02 Termination for Convenience 13
8.03 Termination for Cause 13
8.04 Equitable Settlement 14
ARTICLE IX MISCELLANEOUS PROVISIONS 14
9.01 Amendment 14
9.02 Insurance 14
9.03 Legal Obligations 14
9.04 Permitting and Licensure 14
9.05 Indemnity 15
9.06 Assignments 15
9.07 Relationship of the Parties 15
9.08 Technical Guidance Letters 16
9.09 Governing Law and Venue 16
9.11 Survivability 16
9.12 Force Majeure 17
9.13 No Waiver of Provisions 17
9.14 Publicity 17
9.15 Prohibition on Non-compete Restrictions 17
9.16 No Waiver of Sovereign Immunity 17
9.17 Entire Contract and Modification 17
9.18 Counterparts 17
9.19 Proper Authority 18
9.20 Employment Verification 18
9.21 Civil Rights 18

DocuSign Envelope ID: D0F1C0DA-D6A3-4FA9-9404-C74F1B3561FF

ARTICLE I. DEFINITIONS AND INTERPRETIVE PROVISIONS

1.01 Definitions

As used in this Contract, unless the context clearly indicates otherwise, the following terms and conditions have the meanings assigned below:

"Amendment" means a written agreement, signed by the parties hereto, which documents changes to the Contract other than those permitted by Work Orders or Technical Guidance Letters, as herein defined.

"Attachment" means documents, terms, conditions, or additional information physically added to this Contract following the Signature Document or included by reference, as if physically, within the body of this Contract.

"Contract" means the Signature Document, these Uniform Terms and Conditions, along with any Attachments, and any Amendments, or Technical Guidance Letters that may be issued by the System Agency, to be incorporated by reference herein for all purposes if issued.

"Deliverable" means a work product prepared, developed, or procured by Grantee as part of the Services under the Contract for the use or benefit of the System Agency or the State of Texas.

"Effective Date" means the date agreed to by the Parties as the date on which the Contract takes effect.

"System Agency" means HHSC or any of the agencies of the State of Texas that are overseen by HHSC under authority granted under State law and the officers, employees, and designees of those agencies. These agencies include: the Department of Aging and Disability Services, the Department of Assistive and Rehabilitative Services, the Department of Family and Protective Services, and the Department of State Health Services.

"Federal Fiscal Year" means the period beginning October 1 and ending September 30 each year, which is the annual accounting period for the United States government.

"GAAP" means Generally Accepted Accounting Principles.

"GASB" means the Governmental Accounting Standards Board.

"Grantee" means the Party receiving funds under this Contract, if any.

"Health and Human Services Commission" or "HHSC" means the administrative agency established under Chapter 531, Texas Government Code or its designee.

"HUB" means Historically Underutilized Business, as defined by Chapter 2161 of the Texas Government Code.

"Intellectual Property" means inventions and business processes, whether or not patentable; works of authorship; trade secrets; trademarks; service marks; industrial designs; and creations

DocuSign Envelope ID: D0F1C0DA-D6A3-4FA9-9404-C74F1B3561FF

that are subject to potential legal protection incorporated in any Deliverable and first created or developed by Grantee, Grantee's contractor or a subcontractor in performing the Project.

"Mentor Protégé" means the Comptroller of Public Accounts' leadership program found at: http://www.window.state.tx.us/procurement/prog/hub/mentorprotege/.

"Parties" means the System Agency and Grantee, collectively.

"Party" means either the System Agency or Grantee, individually.

"Program" means the statutorily authorized activities of the System Agency under which this Contract has been awarded.

"Project" means specific activities of the Grantee that are supported by funds provided under this Contract.

"Public Information Act" or "PIA" means Chapter 552 of the Texas Government Code.

"Statement of Work" means the description of activities performed in completing the Project, as specified in the Contract and as may be amended.

"Signature Document" means the document executed by both Parties that specifically sets forth all of the documents that constitute the Contract.

"Solicitation" means the document issued by the System Agency under which applications for Program funds were requested, which is incorporated herein by reference for all purposes in its entirety, including all Amendments and Attachments.

"Solicitation Response" means Grantee's full and complete response to the Solicitation, which is incorporated herein by reference for all purposes in its entirety, including any Attachments and addenda.

"State Fiscal Year" means the period beginning September 1 and ending August 31 each year, which is the annual accounting period for the State of Texas.

"State of Texas *Textravel*" means Texas Administrative Code, Title 34, Part 1, Chapter 5, Subchapter C, Section 5.22, relative to travel reimbursements under this Contract, if any.

"Technical Guidance Letter" or "TGL" means an instruction, clarification, or interpretation of the requirements of the Contract, issued by the System Agency to the Grantee.

1.02 Interpretive Provisions

a. The meanings of defined terms are equally applicable to the singular and plural forms of the defined terms.
b. The words "hereof," "herein," "hereunder," and similar words refer to this Contract as a whole and not to any particular provision, section, Attachment, or schedule of this Contract unless otherwise specified.
c. The term "including" is not limiting and means "including without limitation" and, unless otherwise expressly provided in this Contract, (i) references to contracts (including this Contract) and other contractual instruments shall be deemed to include all subsequent

DocuSign Envelope ID: D0F1C0DA-D6A3-4FA9-9404-C74F1B3561FF

Amendments and other modifications thereto, but only to the extent that such Amendments and other modifications are not prohibited by the terms of this Contract, and (ii) references to any statute or regulation are to be construed as including all statutory and regulatory provisions consolidating, amending, replacing, supplementing, or interpreting the statute or regulation.

d. Any references to "sections," "appendices," or "attachments" are references to sections, appendices, or attachments of the Contract.
e. Any references to agreements, contracts, statutes, or administrative rules or regulations in the Contract are references to these documents as amended, modified, or supplemented from time to time during the term of the Contract.
f. The captions and headings of this Contract are for convenience of reference only and do not affect the interpretation of this Contract.
g. All Attachments within this Contract, including those incorporated by reference, and any Amendments are considered part of the terms of this Contract.
h. This Contract may use several different limitations, regulations, or policies to regulate the same or similar matters. All such limitations, regulations, and policies are cumulative and each will be performed in accordance with its terms.
i. Unless otherwise expressly provided, reference to any action of the System Agency or by the System Agency by way of consent, approval, or waiver will be deemed modified by the phrase "in its sole discretion."
j. Time is of the essence in this Contract.

ARTICLE II PAYMENT METHODS AND RESTRICTIONS

2.01 Payment Methods

Except as otherwise provided by the provisions of the Contract, the payment method will be one or more of the following:

a. cost reimbursement. This payment method is based on an approved budget and submission of a request for reimbursement of expenses Grantee has incurred at the time of the request;
b. unit rate/fee-for-service. This payment method is based on a fixed price or a specified rate(s) or fee(s) for delivery of a specified unit(s) of service and acceptable submission of all required documentation, forms and/or reports; or
c. advance payment. This payment method is based on disbursal of the minimum necessary funds to carry out the Program or Project where the Grantee has implemented appropriate safeguards. This payment method will only be utilized in accordance with governing law and at the sole discretion of the System Agency.

Grantees shall bill the System Agency in accordance with the Contract. Unless otherwise specified in the Contract, Grantee shall submit requests for reimbursement or payment monthly by the last business day of the month following the month in which expenses were incurred or services provided. Grantee shall maintain all documentation that substantiates invoices and make the documentation available to the System Agency upon request.

2.02 Final Billing Submission

Unless otherwise provided by the System Agency, Grantee shall submit a reimbursement or payment request as a final close-out invoice not later than forty-five (45) calendar days following

DocuSign Envelope ID: D0F1C0DA-D6A3-4FA9-9404-C74F1B3561FF

the end of the term of the Contract. Reimbursement or payment requests received in the System Agency's offices more than forty-five (45) calendar days following the termination of the Contract may not be paid.

2.03 Financial Status Reports (FSRs)

Except as otherwise provided in these General Provisions or in the terms of any Program Attachment(s) that is incorporated into the Contract, for contracts with categorical budgets, Grantee shall submit quarterly FSRs to Accounts Payable by the last business day of the month following the end of each quarter of the Program Attachment term for System Agency review and financial assessment. Grantee shall submit the final FSR no later than forty-five (45) calendar days following the end of the applicable term.

2.04 Debt to State and Corporate Status

Pursuant to Tex. Gov. Code § 403.055, the Department will not approve and the State Comptroller will not issue payment to Grantee if Grantee is indebted to the State for any reason, including a tax delinquency. Grantee, if a corporation, certifies by execution of this Contract that it is current and will remain current in its payment of franchise taxes to the State of Texas or that it is exempt from payment of franchise taxes under Texas law (Tex. Tax Code §§ 171.001 et seq.). If tax payments become delinquent during the Contract term, all or part of the payments under this Contract may be withheld until Grantee's delinquent tax is paid in full.

2.05 Application of Payment Due

Grantee agrees that any payments due under this Contract will be applied towards any debt of Grantee, including but not limited to delinquent taxes and child support that is owed to the State of Texas.

2.06 Use of Funds

Grantee shall expend funds provided under this Contract only for the provision of approved services and for reasonable and allowable expenses directly related to those services.

2.07 Use for Match Prohibited

Grantee shall not use funds provided under this Contract for matching purposes in securing other funding without the written approval of the System Agency.

2.08 Program Income

Income directly generated from funds provided under this Contract or earned only as a result of such funds is Program Income. Unless otherwise required under the Program, Grantee shall use the addition alternative, as provided in UGMS § __.25(g)(2), for the use of Project income to further the Program, and Grantee shall spend the Program Income on the Project. Grantee shall identify and report this income in accordance with the Contract, applicable law, and any programmatic guidance. Grantee shall expend Program Income during the Contract term and may not carry Program Income forward to any succeeding term. Grantee shall refund program income to the System Agency if the Program Income is not expended in the term in which it is earned. The System Agency may base future funding levels, in part, upon Grantee's proficiency in identifying, billing, collecting, and reporting Program Income, and in using it for the purposes and under the conditions specified in this Contract.

DocuSign Envelope ID: D0F1C0DA-D6A3-4FA9-9404-C74F1B3561FF

2.09 Nonsupplanting

Grantee shall not use funds from this Contract to replace or substitute for existing funding from other but shall use funds from this Contract to supplement existing state or local funds currently available. Grantee shall make a good faith effort to maintain its current level of support. Grantee may be required to submit documentation substantiating that a reduction in state or local funding, if any, resulted for reasons other than receipt or expected receipt of funding under this Contract.

ARTICLE III. STATE AND FEDERAL FUNDING

3.01 Funding

This Contract is contingent upon the availability of sufficient and adequate funds. If funds become unavailable through lack of appropriations, budget cuts, transfer of funds between programs or agencies, amendment of the Texas General Appropriations Act, agency consolidation, or any other disruptions of current funding for this Contract, the System Agency may restrict, reduce, or terminate funding under this Contract. This Contract is also subject to immediate cancellation or termination, without penalty to the System Agency, if sufficient and adequate funds are not available. Grantee will have no right of action against the System Agency if the System Agency cannot perform its obligations under this Contract as a result of lack of funding for any activities or functions contained within the scope of this Contract. In the event of cancellation or termination under this Section, the System Agency will not be required to give notice and will not be liable for any damages or losses caused or associated with such termination or cancellation.

3.02 No debt Against the State

The Contract will not be construed as creating any debt by or on behalf of the State of Texas.

3.03 Debt to State

If a payment law prohibits the Texas Comptroller of Public Accounts from making a payment, the Grantee acknowledges the System Agency's payments under the Contract will be applied toward eliminating the debt or delinquency. This requirement specifically applies to any debt or delinquency, regardless of when it arises.

3.04 Recapture of Funds

The System Agency may withhold all or part of any payments to Grantee to offset overpayments made to the Grantee. Overpayments as used in this Section include payments (i) made by the System Agency that exceed the maximum allowable rates; (ii) that are not allowed under applicable laws, rules, or regulations; or (iii) that are otherwise inconsistent with this Contract, including any unapproved expenditures. Grantee understands and agrees that it will be liable to the System Agency for any costs disallowed pursuant to financial and compliance audit(s) of funds received under this Contract. Grantee further understands and agrees that reimbursement of such disallowed costs will be paid by Grantee from funds which were not provided or otherwise made available to Grantee under this Contract.

DocuSign Envelope ID: D0F1C0DA-D6A3-4FA9-9404-C74F1B3561FF

ARTICLE IV ALLOWABLE COSTS AND AUDIT REQUIREMENTS

4.01 Allowable Costs.

System Agency will reimburse the allowable costs incurred in performing the Project that are sufficiently documented. Grantee must have incurred a cost prior to claiming reimbursement and within the applicable term to be eligible for reimbursement under this Contract. The System Agency will determine whether costs submitted by Grantee are allowable and eligible for reimbursement. If the System Agency has paid funds to Grantee for unallowable or ineligible costs, the System Agency will notify Grantee in writing, and Grantee shall return the funds to the System Agency within thirty (30) calendar days of the date of this written notice. The System Agency may withhold all or part of any payments to Grantee to offset reimbursement for any unallowable or ineligible expenditure that Grantee has not refunded to the System Agency, or if financial status report(s) required under the Financial Status Reports section are not submitted by the due date(s). The System Agency may take repayment (recoup) from funds available under this Contract in amounts necessary to fulfill Grantee's repayment obligations. Applicable cost principles, audit requirements, and administrative requirements include-

Applicable Entity	Applicable Cost Principles	Audit Requirements	Administrative Requirements
State, Local and Tribal Governments	2 CFR, Part 225	2 CFR Part 200, Subpart F and UGMS	2 CFR Part 200 and UGMS
Educational Institutions	2 CFR, Part 220	2 CFR Part 200, Subpart F and UGMS	2 CFR Part 200 and UGMS
Non-Profit Organizations	2 CFR, Part 230	2 CFR Part 200, Subpart F and UGMS	2 CFR Part 200 and UGMS
For-profit Organization other than a hospital and an organization named in OMB Circular A-122 (2 CFR Part, 230) as not subject to that circular.	48 CFR Part 31, Contract Cost Principles Procedures, or uniform cost accounting standards that comply with cost principles acceptable to the federal or state awarding agency	2 CFR Part 200, Subpart F and UGMS	2 CFR Part 200 and UGMS

DocuSign Envelope ID: D0F1C0DA-D6A3-4FA9-9404-C74F1B3561FF

OMB Circulars will be applied with the modifications prescribed by UGMS with effect given to whichever provision imposes the more stringent requirement in the event of a conflict.

4.02 Independent Single or Program-Specific Audit

If Grantee, within Grantee's fiscal year, expends a total amount of at least **SEVEN HUNDRED FIFTY THOUSAND DOLLARS ($750,000)** in federal funds awarded, Grantee shall have a single audit or program-specific audit in accordance with the 2 CFR 200. The $750,000 federal threshold amount includes federal funds passed through by way of state agency awards. If Grantee, within Grantee's fiscal year, expends a total amount of at least $750,000 in state funds awarded, Grantee must have a single audit or program-specific audit in accordance with UGMS, State of Texas Single Audit Circular. For-profit Grantees whose expenditures meet or exceed the federal or state expenditure thresholds stated above shall follow the guidelines in 2 CFR 200 or UGMS, as applicable, for their program-specific audits. The HHSC Office of Inspector General (OIG) will notify Grantee to complete the Single Audit Status Registration Form. If Grantee fails to complete the Single Audit Status Form within thirty (30) calendar days after notification by OIG to do so, Grantee shall be subject to the System Agency sanctions and remedies for non-compliance with this Contract. The audit must be conducted by an independent certified public accountant and in accordance with applicable OMB Circulars, Government Auditing Standards, and UGMS. Grantee shall procure audit services in compliance with this section, state procurement procedures, as well as with the provisions of UGMS

4.03 Submission of Audit

Within thirty (30) calendar days of receipt of the audit reports required by the Independent Single or Program-Specific Audit section, Grantee shall submit one copy to the System Agency as directed in this Contract. The Grantee will also submit a copy of the Independent Single or Program-Specific Audit to the OIG, at the following address:

Health and Human Services Commission
Office of Inspector General
Compliance/Audit, Mail Code 1326
P.O. Box 85200
Austin, Texas 78708-5200

Electronic submission to OIG should be addressed as follows:
Dani.fielding@hhsc.state.tx.us

If Grantee fails to submit the audit report as required by the Independent Single or Program-Specific Audit section within thirty (30) calendar days of receipt by Grantee of an audit report, Grantee shall be subject to the System Agency sanctions and remedies for non-compliance with this Contract.

DocuSign Envelope ID: D0F1C0DA-D6A3-4FA9-9404-C74F1B3561FF

ARTICLE V AFFIRMATIONS, ASSURANCES AND CERTIFICATIONS

5.01 General Affirmations

Grantee certifies that, to the extent General Affirmations are incorporated into the Contract under the Signature Document, the General Affirmations have been reviewed and that Grantee is in compliance with each of the requirements reflected therein.

5.02 Federal Assurances

Grantee further certifies that, to the extent Federal Assurances are incorporated into the Contract under the Signature Document, the Federal Assurances have been reviewed and that Grantee is in compliance with each of the requirements reflected therein.

5.03 Federal Certifications

Grantee further certifies, to the extent Federal Certifications are incorporated into the Contract under the Signature Document, that the Federal Certifications have been reviewed, and that Grantee is in compliance with each of the requirements reflected therein. **In addition, Grantee certifies that it is in compliance with all applicable federal laws, rules, or regulations, as they may pertain to this Contract.**

ARTICLE VI OWNERSHIP AND INTELLECTUAL PROPERTY

6.01 Ownership

The System Agency will own, and Grantee hereby assigns to the System Agency, all right, title, and interest in all Deliverables.

6.02 Intellectual Property

a. The System Agency and Grantee will retain ownership, all rights, title, and interest in and to, their respective pre-existing Intellectual Property. A license to either Party's pre-existing Intellectual Property must be agreed to under this or another contract.

b. Grantee grants to the System Agency and the State of Texas a royalty-free, paid up, worldwide, perpetual, non-exclusive, non-transferable license to use any Intellectual Property invented or created by Grantee, Grantee's contractor, or a subcontractor in the performance of the Project. Grantee will require its contractors to grant such a license under its contracts.

ARTICLE VII RECORDS, AUDIT, AND DISCLOSURE

7.01 Books and Records

Grantee will keep and maintain under GAAP or GASB, as applicable, full, true, and complete records necessary to fully disclose to the System Agency, the Texas State Auditor's Office, the United States Government, and their authorized representatives sufficient information to determine compliance with the terms and conditions of this Contract and all state and federal rules, regulations, and statutes. Unless otherwise specified in this Contract, Grantee will maintain legible copies of this Contract and all related documents for a minimum of seven (7) years after the termination of the contract period or seven (7) years after the completion of any litigation or dispute involving the Contract, whichever is later.

DocuSign Envelope ID: D0F1C0DA-D6A3-4FA9-9404-C74F1B3561FF

7.02 Access to records, books, and documents

In addition to any right of access arising by operation of law, Grantee and any of Grantee's affiliate or subsidiary organizations, or Subcontractors will permit the System Agency or any of its duly authorized representatives, as well as duly authorized federal, state or local authorities, unrestricted access to and the right to examine any site where business is conducted or Services are performed, and all records, which includes but is not limited to financial, client and patient records, books, papers or documents related to this Contract. If the Contract includes federal funds, federal agencies that will have a right of access to records as described in this section include: the federal agency providing the funds, the Comptroller General of the United States, the General Accounting Office, the Office of the Inspector General, and any of their authorized representatives. In addition, agencies of the State of Texas that will have a right of access to records as described in this section include: the System Agency, HHSC, HHSC's contracted examiners, the State Auditor's Office, the Texas Attorney General's Office, and any successor agencies. Each of these entities may be a duly authorized authority. If deemed necessary by the System Agency or any duly authorized authority, for the purpose of investigation or hearing, Grantee will produce original documents related to this Contract. The System Agency and any duly authorized authority will have the right to audit billings both before and after payment, and all documentation that substantiates the billings. Grantee will include this provision concerning the right of access to, and examination of, sites and information related to this Contract in any Subcontract it awards.

7.03 Response/compliance with audit or inspection findings

a. Grantee must act to ensure its and its Subcontractor's compliance with all corrections necessary to address any finding of noncompliance with any law, regulation, audit requirement, or generally accepted accounting principle, or any other deficiency identified in any audit, review, or inspection of the Contract and the goods or services provided hereunder. Any such correction will be at Grantee or its Subcontractor's sole expense. Whether Grantee's action corrects the noncompliance will be solely the decision of the System Agency.

b. As part of the Services, Grantee must provide to HHSC upon request a copy of those portions of Grantee's and its Subcontractors' internal audit reports relating to the Services and Deliverables provided to the State under the Contract.

7.04 SAO Audit

Grantee understands that acceptance of funds directly under the Contract or indirectly through a Subcontract under the Contract acts as acceptance of the authority of the State Auditor's Office (SAO), or any successor agency, to conduct an audit or investigation in connection with those funds. Under the direction of the legislative audit committee, an entity that is the subject of an audit or investigation by the SAO must provide the SAO with access to any information the SAO considers relevant to the investigation or audit. Grantee agrees to cooperate fully with the SAO or its successor in the conduct of the audit or investigation, including providing all records requested. Grantee will ensure that this clause concerning the authority to audit funds received indirectly by Subcontractors through Grantee and the requirement to cooperate is included in any Subcontract it awards.

DocuSign Envelope ID: D0F1C0DA-D6A3-4FA9-9404-C74F1B3561FF

7.05 Confidentiality

Any specific confidentiality agreement between the Parties takes precedent over the terms of this section. To the extent permitted by law, Grantee agrees to keep all information confidential, in whatever form produced, prepared, observed, or received by Grantee. The provisions of this section remain in full force and effect following termination or cessation of the services performed under this Contract.

7.06 Public Information Act

Information related to the performance of this Contract may be subject to the PIA and will be withheld from public disclosure or released only in accordance therewith. Grantee must make all information not otherwise excepted from disclosure under the PIA available in portable document file (".pdf") format or any other format agreed between the Parties.

ARTICLE VIII CONTRACT MANAGEMENT AND EARLY TERMINATION

8.01 Contract Management

To ensure full performance of the Contract and compliance with applicable law, the System Agency may take actions including:

a. Suspending all or part of the Contract;
b. Requiring the Grantee to take specific corrective actions in order to remain in compliance with term of the Contract;
c. Recouping payments made to the Grantee found to be in error;
d. Suspending, limiting, or placing conditions on the continued performance of the Project;
e. Imposing any other remedies authorized under this Contract; and
f. Imposing any other remedies, sanctions or penalties permitted by federal or state statute, law, regulation, or rule.

8.02 Termination for Convenience

The System Agency may terminate the Contract at any time when, in its sole discretion, the System Agency determines that termination is in the best interests of the State of Texas. The termination will be effective on the date specified in HHSC's notice of termination.

8.03 Termination for Cause

Except as otherwise provided by the U.S. Bankruptcy Code, or any successor law, the System Agency may terminate the Contract, in whole or in part, upon either of the following conditions:

a. Material Breach

The System Agency will have the right to terminate the Contract in whole or in part if the System Agency determines, at its sole discretion, that Grantee has materially breached the Contract or has failed to adhere to any laws, ordinances, rules, regulations or orders of any public authority having jurisdiction and such violation prevents or substantially impairs performance of Grantee's duties under the Contract. Grantee's misrepresentation in any aspect of Grantee's Solicitation Response, if any or Grantee's addition to the Excluded Parties List System (EPLS) will also constitute a material breach of the Contract.

b. Failure to Maintain Financial Viability

DocuSign Envelope ID: D0F1C0DA-D6A3-4FA9-9404-C74F1B3561FF

The System Agency may terminate the Contract if, in its sole discretion, the System Agency has a good faith belief that Grantee no longer maintains the financial viability required to complete the Services and Deliverables, or otherwise fully perform its responsibilities under the Contract.

8.04 Equitable Settlement

Any early termination under this Article will be subject to the equitable settlement of the respective interests of the Parties up to the date of termination.

ARTICLE IX MISCELLANEOUS PROVISIONS

9.01 Amendment

The Contract may only be amended by an Amendment executed by both Parties.

9.02 Insurance

Unless otherwise specified in this Contract, Grantee will acquire and maintain, for the duration of this Contract, insurance coverage necessary to ensure proper fulfillment of this Contract and potential liabilities thereunder with financially sound and reputable insurers licensed by the Texas Department of Insurance, in the type and amount customarily carried within the industry as determined by the System Agency. Grantee will provide evidence of insurance as required under this Contract, including a schedule of coverage or underwriter's schedules establishing to the satisfaction of the System Agency the nature and extent of coverage granted by each such policy, upon request by the System Agency. In the event that any policy is determined by the System Agency to be deficient to comply with the terms of this Contract, Grantee will secure such additional policies or coverage as the System Agency may reasonably request or that are required by law or regulation. If coverage expires during the term of this Contract, Grantee must produce renewal certificates for each type of coverage.

These and all other insurance requirements under the Contract apply to both Grantee and its Subcontractors, if any. Grantee is responsible for ensuring its Subcontractors' compliance with all requirements.

9.03 Legal Obligations

Grantee will comply with all applicable federal, state, and local laws, ordinances, and regulations, including all federal and state accessibility laws relating to direct and indirect use of information and communication technology. Grantee will be deemed to have knowledge of all applicable laws and regulations and be deemed to understand them. In addition to any other act or omission that may constitute a material breach of the Contract, failure to comply with this Section may also be a material breach of the Contract.

9.04 Permitting and Licensure

At Grantee's sole expense, Grantee will procure and maintain for the duration of this Contract any state, county, city, or federal license, authorization, insurance, waiver, permit, qualification or certification required by statute, ordinance, law, or regulation to be held by Grantee to provide the goods or Services required by this Contract. Grantee will be responsible for payment of all taxes, assessments, fees, premiums, permits, and licenses required by law. Grantee agrees to be responsible for payment of any such government obligations not paid by its contactors or subcontractors during performance of this Contract.

DocuSign Envelope ID: D0F1C0DA-D6A3-4FA9-9404-C74F1B3561FF

9.05 Indemnity

TO THE EXTENT ALLOWED BY LAW, GRANTEE WILL DEFEND, INDEMNIFY, AND HOLD HARMLESS THE STATE OF TEXAS AND ITS OFFICERS AND EMPLOYEES, AND THE SYSTEM AGENCY AND ITS OFFICERS AND EMPLOYEES, FROM AND AGAINST ALL CLAIMS, ACTIONS, SUITS, DEMANDS, PROCEEDINGS, COSTS, DAMAGES, AND LIABILITIES, INCLUDING ATTORNEYS' FEES AND COURT COSTS ARISING OUT OF, OR CONNECTED WITH, OR RESULTING FROM:

a. GRANTEE'S PERFORMANCE OF THE CONTRACT, INCLUDING ANY NEGLIGENT ACTS OR OMISSIONS OF GRANTEE, OR ANY AGENT, EMPLOYEE, SUBCONTRACTOR, OR SUPPLIER OF GRANTEE, OR ANY THIRD PARTY UNDER THE CONTROL OR SUPERVISION OF GRANTEE, IN THE EXECUTION OR PERFORMANCE OF THIS CONTRACT; OR

b. ANY BREACH OR VIOLATION OF A STATUTE, ORDINANCE, GOVERNMENTAL REGULATION, STANDARD, RULE, OR BREACH OF CONTRACT BY GRANTEE, ANY AGENT, EMPLOYEE, SUBCONTRACTOR, OR SUPPLIER OF GRANTEE, OR ANY THIRD PARTY UNDER THE CONTROL OR SUPERVISION OF GRANTEE, IN THE EXECUTION OR PERFORMANCE OF THIS CONTRACT; OR

c. EMPLOYMENT OR ALLEGED EMPLOYMENT, INCLUDING CLAIMS OF DISCRIMINATION AGAINST GRANTEE, ITS OFFICERS, OR ITS AGENTS; OR

d. WORK UNDER THIS CONTRACT THAT INFRINGES OR MISAPPROPRIATES ANY RIGHT OF ANY THIRD PERSON OR ENTITY BASED ON COPYRIGHT, PATENT, TRADE SECRET, OR OTHER INTELLECTUAL PROPERTY RIGHTS.

GRANTEE WILL COORDINATE ITS DEFENSE WITH THE SYSTEM AGENCY AND ITS COUNSEL. THIS PARAGRAPH IS NOT INTENDED TO AND WILL NOT BE CONSTRUED TO REQUIRE GRANTEE TO INDEMNIFY OR HOLD HARMLESS THE STATE OR THE SYSTEM AGENCY FOR ANY CLAIMS OR LIABILITIES RESULTING SOLELY FROM THE GROSS NEGLIGENCE OF THE SYSTEM AGENCY OR ITS EMPLOYEES. THE PROVISIONS OF THIS SECTION WILL SURVIVE TERMINATION OF THIS CONTRACT.

9.06 Assignments

Grantee may not assign all or any portion of its rights under, interests in, or duties required under this Contract without prior written consent of the System Agency, which may be withheld or granted at the sole discretion of the System Agency. Except where otherwise agreed in writing by the System Agency, assignment will not release Grantee from its obligations under the Contract.

Grantee understands and agrees the System Agency may in one or more transactions assign, pledge, or transfer the Contract. This assignment will only be made to another State agency or a non-state agency that is contracted to perform agency support.

9.07 Relationship of the Parties

Grantee is, and will be, an independent contractor and, subject only to the terms of this Contract, will have the sole right to supervise, manage, operate, control, and direct performance of the details incident to its duties under this Contract. Nothing contained in this Contract will be deemed or construed to create a partnership or joint venture, to create relationships of an employer-employee or principal-agent, or to otherwise create for the System Agency any

DocuSign Envelope ID: D0F1C0DA-D6A3-4FA9-9404-C74F1B3561FF

liability whatsoever with respect to the indebtedness, liabilities, and obligations of Grantee or any other Party.

Grantee will be solely responsible for, and the System Agency will have no obligation with respect to:

a. Payment of Grantee's employees for all Services performed;
b. Ensuring each of its employees, agents, or Subcontractors who provide Services or Deliverables under the Contract are properly licensed, certified, or have proper permits to perform any activity related to the Work;
c. Withholding of income taxes, FICA, or any other taxes or fees;
d. Industrial or workers' compensation insurance coverage;
e. Participation in any group insurance plans available to employees of the State of Texas;
f. Participation or contributions by the State to the State Employees Retirement System;
g. Accumulation of vacation leave or sick leave; or
h. Unemployment compensation coverage provided by the State.

9.08 Technical Guidance Letters

In the sole discretion of the System Agency, and in conformance with federal and state law, the System Agency may issue instructions, clarifications, or interpretations as may be required during Work performance in the form of a Technical Guidance Letter. A TGL must be in writing, and may be delivered by regular mail, electronic mail, or facsimile transmission. Any TGL issued by the System Agency will be incorporated into the Contract by reference herein for all purposes when it is issued.

9.09 Governing Law and Venue

This Contract and the rights and obligations of the Parties hereto will be governed by, and construed according to, the laws of the State of Texas, exclusive of conflicts of law provisions. Venue of any suit brought under this Contract will be in a court of competent jurisdiction in Travis County, Texas unless otherwise elected by the System Agency. Grantee irrevocably waives any objection, including any objection to personal jurisdiction or the laying of venue or based on the grounds of forum non conveniens, which it may now or hereafter have to the bringing of any action or proceeding in such jurisdiction in respect of this Contract or any document related hereto.

9.10 Severability

If any provision contained in this Contract is held to be unenforceable by a court of law or equity, this Contract will be construed as if such provision did not exist and the non-enforceability of such provision will not be held to render any other provision or provisions of this Contract unenforceable.

9.11 Survivability

Termination or expiration of this Contract or a Contract for any reason will not release either party from any liabilities or obligations in this Contract that the parties have expressly agreed will survive any such termination or expiration, remain to be performed, or by their nature would be intended to be applicable following any such termination or expiration, including maintaining confidentiality of information and records retention.

DocuSign Envelope ID: D0F1C0DA-D6A3-4FA9-9404-C74F1B3561FF

9.12 Force Majeure

Except with respect to the obligation of payments under this Contract, if either of the Parties, after a good faith effort, is prevented from complying with any express or implied covenant of this Contract by reason of war; terrorism; rebellion; riots; strikes; acts of God; any valid order, rule, or regulation of governmental authority; or similar events that are beyond the control of the affected Party (collectively referred to as a "Force Majeure"), then, while so prevented, the affected Party's obligation to comply with such covenant will be suspended, and the affected Party will not be liable for damages for failure to comply with such covenant. In any such event, the Party claiming Force Majeure will promptly notify the other Party of the Force Majeure event in writing and, if possible, such notice will set forth the extent and duration thereof.

9.13 No Waiver of Provisions

Neither failure to enforce any provision of this Contract nor payment for services provided under it constitute waiver of any provision of the Contract.

9.14 Publicity

Except as provided in the paragraph below, Grantee must not use the name of, or directly or indirectly refer to, the System Agency, the State of Texas, or any other State agency in any media release, public announcement, or public disclosure relating to the Contract or its subject matter, including in any promotional or marketing materials, customer lists, or business presentations.

Grantee may publish, at its sole expense, results of Grantee performance under the Contract with the System Agency's prior review and approval, which the System Agency may exercise at its sole discretion. Any publication (written, visual, or sound) will acknowledge the support received from the System Agency and any Federal agency, as appropriate.

9.15 Prohibition on Non-compete Restrictions

Grantee will not require any employees or Subcontractors to agree to any conditions, such as non-compete clauses or other contractual arrangements that would limit or restrict such persons or entities from employment or contracting with the State of Texas.

9.16 No Waiver of Sovereign Immunity

Nothing in the Contract will be construed as a waiver of sovereign immunity by the System Agency.

9.17 Entire Contract and Modification

The Contract constitutes the entire agreement of the Parties and is intended as a complete and exclusive statement of the promises, representations, negotiations, discussions, and other agreements that may have been made in connection with the subject matter hereof. Any additional or conflicting terms in any future document incorporated into the Contract will be harmonized with this Contract to the extent possible by the System Agency.

9.18 Counterparts

This Contract may be executed in any number of counterparts, each of which will be an original, and all such counterparts will together constitute but one and the same Contract.

DocuSign Envelope ID: D0F1C0DA-D6A3-4FA9-9404-C74F1B3561FF

9.19 Proper Authority

Each Party hereto represents and warrants that the person executing this Contract on its behalf has full power and authority to enter into this Contract. Any Services or Work performed by Grantee before this Contract is effective or after it ceases to be effective are performed at the sole risk of Grantee with respect to compensation.

9.20 Employment Verification

Grantee will confirm the eligibility of all persons employed during the contract term to perform duties within Texas and all persons, including subcontractors, assigned by the contractor to perform work pursuant to the Contract.

9.21 Civil Rights

a. Grantee agrees to comply with state and federal anti-discrimination laws, including:
   1. Title VI of the Civil Rights Act of 1964 (42 U.S.C. §2000d *et seq.*);
   2. Section 504 of the Rehabilitation Act of 1973 (29 U.S.C. §794);
   3. Americans with Disabilities Act of 1990 (42 U.S.C. §12101 *et seq*.);
   4. Age Discrimination Act of 1975 (42 U.S.C. §§6101-6107);
   5. Title IX of the Education Amendments of 1972 (20 U.S.C. §§1681-1688);
   6. Food and Nutrition Act of 2008 (7 U.S.C. §2011 *et seq*.); and
   7. The System Agency's administrative rules, as set forth in the Texas Administrative Code, to the extent applicable to this Agreement.

   Grantee agrees to comply with all amendments to the above-referenced laws, and all requirements imposed by the regulations issued pursuant to these laws. These laws provide in part that no persons in the United States may, on the grounds of race, color, national origin, sex, age, disability, political beliefs, or religion, be excluded from participation in or denied any aid, care, service or other benefits provided by Federal or State funding, or otherwise be subjected to discrimination.

b. Grantee agrees to comply with Title VI of the Civil Rights Act of 1964, and its implementing regulations at 45 C.F.R. Part 80 or 7 C.F.R. Part 15, prohibiting a contractor from adopting and implementing policies and procedures that exclude or have the effect of excluding or limiting the participation of clients in its programs, benefits, or activities on the basis of national origin. State and federal civil rights laws require contractors to provide alternative methods for ensuring access to services for applicants and recipients who cannot express themselves fluently in English. Grantee agrees to take reasonable steps to provide services and information, both orally and in writing, in appropriate languages other than English, in order to ensure that persons with limited English proficiency are effectively informed and can have meaningful access to programs, benefits, and activities.

c. Grantee agrees to post applicable civil rights posters in areas open to the public informing clients of their civil rights and including contact information for the HHS Civil Rights Office. The posters are available on the HHS website at: http://www.hhsc.state.tx.us/about_hhsc/civil-rights/brochures-posters.shtml

DocuSign Envelope ID: D0F1C0DA-D6A3-4FA9-9404-C74F1B3561FF

d. Grantee agrees to comply with Executive Order 13279, and its implementing regulations at 45 C.F.R. Part 87 or 7 C.F.R. Part 16. These provide in part that any organization that participates in programs funded by direct financial assistance from the United States Department of Agriculture or the United States Department of Health and Human Services shall not discriminate against a program beneficiary or prospective program beneficiary on the basis of religion or religious belief.

e. Upon request, Grantee will provide HHSC Civil Rights Office with copies of all of the Grantee's civil rights policies and procedures.

f. Grantee must notify HHSC's Civil Rights Office of any civil rights complaints received relating to its performance under this Agreement. This notice must be delivered no more than ten (10) calendar days after receipt of a complaint. Notice provided pursuant to this section must be directed to:

HHSC Civil Rights Office
701 W. 51st Street, Mail Code W206
Austin, Texas 78751
Phone Toll Free: (888) 388-6332
Phone: (512) 438-4313
TTY Toll Free: (877) 432-7232
Fax: (512) 438-5885.

DocuSign Envelope ID: D0F1C0DA-D6A3-4FA9-9404-C74F1B3561FF

ATTACHMENT D
SUPPLEMENTAL & SPECIAL CONDITIONS

SUPPLEMENTAL CONDITIONS

There are no supplemental condition for this contract that modify the HHS Uniform Terms and Conditions.

SPECIAL CONDITIONS

Section 1.01 Notice of Legal Matter or Litigation.
Grantee shall notify the contract manager assigned to this Contract of any litigation or legal matter related to or affecting this Contract within seven calendar days of becoming aware of the litigation or legal matter.

Section 1.02 Notice of a Contract Action.
Grantee shall notify their assigned contract manager assigned to the contract if Grantee has had any contract suspended or terminated for cause by any local, state or federal department or agency or nonprofit entity within five days of becoming aware of the action and include the following:

a. Reason for such action;
b. Name and contact information of the local, state or federal department or agency or entity;
c. Date of the contract;
d. Date of suspension or termination; and
e. Contract or case reference number.

Section 1.03 Notice of Bankruptcy.
Grantee shall notify in writing their assigned contract manager assigned of its plan to seek bankruptcy protection within five days of such action by Grantee.

Section 1.04 Notice of Criminal Activity and Disciplinary Actions.

a. Grantee shall immediately report in writing their contract manager when the Grantee has knowledge or reason to believe any that they or any person with ownership or controlling interest in the organization/business, or their agent, employee, subcontractor or volunteer that is providing services under this Contract has engaged in any activity that:

    1. Would constitute a criminal offense equal to or greater than a Class A misdemeanor; and
    2. Reasonably would constitute grounds for disciplinary action by a state or federal regulatory authority; or
    3. Has been placed on community supervision, received deferred adjudication, or been indicted for or convicted of a criminal offense relating to involvement in any financial matter, federal or state program or felony sex crime.

b. Grantee shall not permit any person who engaged, or was alleged to have engaged, in any activity subject to reporting under this section to perform direct client services or have direct contact with clients, unless otherwise directed in writing by DSHS.

Section 1.05 Grantee's Notification of Change of Contact Person or Key Personnel.
Within ten days shall notify in writing the contract manager assigned to the Contract of any change enumerated in the Grantee's Contact Person or Key Personnel.

Section 1.06 Services and Information for Persons with Limited English Proficiency.

a. Grantee shall take reasonable steps to provide services and information both orally and in writing, in appropriate languages other than English, to ensure that persons with limited English proficiency are effectively informed and can have meaningful access to programs, benefits and activities.

b. Grantee shall identify and document on the client records the primary language/dialect of a client who has limited English proficiency and the need for translation or interpretation services and shall not

DocuSign Envelope ID: D0F1C0DA-D6A3-4FA9-9404-C74F1B3561FF

require a client to provide or pay for the services of a translator or interpreter.

c. Grantee shall make every effort to avoid use of any persons under the age of 18 or any family member or friend of the client as an interpreter for essential communications with a client with limited English proficiency unless the client has requested that person and using the person would not compromise the effectiveness of services or violate the client's confidentiality and the client is advised that a free interpreter is available.

Section 1.07 HIV/AIDS Model Workplace Guidelines.
Grantee shall implement Department's policies based on the Human Immunodeficiency Virus/Acquired Immunodeficiency Syndrome (HIV/AIDS), AIDS Model Workplace Guidelines for Businesses at http://www.dshs.state.tx.us/hivstd/policy/policies.shtm, State Agencies and State Grantees Policy No. 090.021.

Grantee shall also educate employees and clients concerning HIV and its related conditions, including AIDS, in accordance with the Texas. Health & Safety Code §§ 85.112-114.

Section 1.08 Electronic and Information Resources Accessibility and Security Standards.

a. **Applicability.**

The following Electronic and Information Resources (EIR) requirements apply to the Contract because the Grantee performs services that include EIR that DSHS employees are required or permitted to access or members of the public are required or permitted to access.

This Section does not apply to incidental uses of EIR in the performance of the Agreement, unless the Parties agree that the EIR will become property of the State of Texas or will be used by HHSC's clients or recipients after completion of the Agreement.

Nothing in this section is intended to prescribe the use of particular designs or technologies or to prevent the use of alternative technologies, provided they result in substantially equivalent or greater access to and use of a Product.

b. **Definitions.**
For purposes of this Section:

"Accessibility Standards" means accessibility standards and specifications for Texas agency and institution of higher education websites and EIR set forth in 1 TAC Chapter 206 and/or Chapter 213.

"**Electronic and Information Resources**" means information resources, including information resources technologies, and any equipment or interconnected system of equipment that is used in the creation, conversion, duplication, or delivery of data or information. The term includes telephones and other telecommunications products, information kiosks, transaction machines, Internet websites, multimedia resources, and office equipment, including copy machines and fax machines.

"Electronic and Information Resources Accessibility Standards" means the accessibility standards for electronic and information resources contained in 1 Texas Administrative Code Chapter 213.

"Product" means information resources technology that is, or is related to EIR.

"Web Site Accessibility Standards/ Specifications" means standards contained in Volume 1 Tex. Admin. Code Chapter 206(c) Accessibility Requirements.

Under Tex. Gov't Code Chapter 2054, Subchapter M, and implementing rules of the Texas Department of

DocuSign Envelope ID: D0F1C0DA-D6A3-4FA9-9404-C74F1B3561FF

Information Resources, DSHS must procure Products and services that comply with the Accessibility Standards when those Products are available in the commercial marketplace or when those Products are developed in response to a procurement solicitation. Accordingly, Grantee must provide electronic and information resources and associated Product documentation and technical support that comply with the Accessibility Standards.

c. **Evaluation, Testing, and Monitoring.**

1. DSHS may review, test, evaluate and monitor Grantee's Products and services, as well as associated documentation and technical support for compliance with the Accessibility Standards. Review, testing, evaluation and monitoring may be conducted before and after the award of a contract. Testing and monitoring may include user acceptance testing.
   Neither the review, testing (including acceptance testing), evaluation or monitoring of any Product or service, nor the absence of review, testing, evaluation or monitoring, will result in a waiver of the State's right to contest the Grantee's assertion of compliance with the Accessibility Standards.

2. Grantee agrees to cooperate fully and provide DSHS and its representatives timely access to Products, records, and other items and information needed to conduct such review, evaluation, testing, and monitoring.

d. **Representations and Warranties.**

1. Grantee represents and warrants that:

   i. As of the Effective Date of the Contract, the Products and associated documentation and technical support comply with the Accessibility Standards as they exist at the time of entering the Agreement, unless and to the extent the Parties otherwise expressly agree in writing; and

   ii. If the Products will be in the custody of the state or a DSHS client or recipient after the Contract expiration or termination, the Products will continue to comply with Accessibility Standards after the expiration or termination of the Contract Term, unless DSHS or its clients or recipients, as applicable, use the Products in a manner that renders it noncompliant.

2. In the event Grantee becomes aware, or is notified that the Product or service and associated documentation and technical support do not comply with the Accessibility Standards, Grantee represents and warrants that it will, in a timely manner and at no cost to DSHS, perform all necessary steps to satisfy the Accessibility Standards, including remediation, replacement, and upgrading of the Product or service, or providing a suitable substitute.

3. Grantee acknowledges and agrees that these representations and warranties are essential inducements on which DSHS relies in awarding this Contract.

4. Grantee's representations and warranties under this subsection will survive the termination or expiration of the Contract and will remain in full force and effect throughout the useful life of the Product.

e. **Remedies.**

1. Under Tex. Gov't Code § 2054.465, neither the Grantee nor any other person has cause of action against DSHS for a claim of a failure to comply with Tex. Gov't Code Chapter 2054, Subchapter M, and rules of the Department of Information Resources.

2. In the event of a breach of Grantee's representations and warranties, Grantee will be liable for direct, consequential, indirect, special, or liquidated damages and any other remedies to which DSHS may be entitled under this Contract and other applicable law. This remedy is cumulative of

DocuSign Envelope ID: D0F1C0DA-D6A3-4FA9-9404-C74F1B3561FF

any other remedies to which DSHS may be entitled under this Contract and other applicable law.

DocuSign Envelope ID: D0F1C0DA-D6A3-4FA9-9404-C74F1B3561FF

OMB Number: 4040-0007
Expiration Date: 01/31/2019

ASSURANCES - NON-CONSTRUCTION PROGRAMS

Public reporting burden for this collection of information is estimated to average 15 minutes per response, including time for reviewing instructions, searching existing data sources, gathering and maintaining the data needed, and completing and reviewing the collection of information. Send comments regarding the burden estimate or any other aspect of this collection of information, including suggestions for reducing this burden, to the Office of Management and Budget, Paperwork Reduction Project (0348-0040), Washington, DC 20503.

PLEASE DO NOT RETURN YOUR COMPLETED FORM TO THE OFFICE OF MANAGEMENT AND BUDGET. SEND IT TO THE ADDRESS PROVIDED BY THE SPONSORING AGENCY.

NOTE: Certain of these assurances may not be applicable to your project or program. If you have questions, please contact the awarding agency. Further, certain Federal awarding agencies may require applicants to certify to additional assurances. If such is the case, you will be notified.

As the duly authorized representative of the applicant, I certify that the applicant:

1. Has the legal authority to apply for Federal assistance and the institutional, managerial and financial capability (including funds sufficient to pay the non-Federal share of project cost) to ensure proper planning, management and completion of the project described in this application.

2. Will give the awarding agency, the Comptroller General of the United States and, if appropriate, the State, through any authorized representative, access to and the right to examine all records, books, papers, or documents related to the award; and will establish a proper accounting system in accordance with generally accepted accounting standards or agency directives.

3. Will establish safeguards to prohibit employees from using their positions for a purpose that constitutes or presents the appearance of personal or organizational conflict of interest, or personal gain.

4. Will initiate and complete the work within the applicable time frame after receipt of approval of the awarding agency.

5. Will comply with the Intergovernmental Personnel Act of 1970 (42 U.S.C. §§4728-4763) relating to prescribed standards for merit systems for programs funded under one of the 19 statutes or regulations specified in Appendix A of OPM's Standards for a Merit System of Personnel Administration (5 C.F.R. 900, Subpart F).

6. Will comply with all Federal statutes relating to nondiscrimination. These include but are not limited to: (a) Title VI of the Civil Rights Act of 1964 (P.L. 88-352) which prohibits discrimination on the basis of race, color or national origin; (b) Title IX of the Education Amendments of 1972, as amended (20 U.S.C.§§1681-1683, and 1685-1686), which prohibits discrimination on the basis of sex; (c) Section 504 of the Rehabilitation Act of 1973, as amended (29 U.S.C. §794), which prohibits discrimination on the basis of handicaps; (d) the Age Discrimination Act of 1975, as amended (42 U. S.C. §§6101-6107), which prohibits discrimination on the basis of age; (e) the Drug Abuse Office and Treatment Act of 1972 (P.L. 92-255), as amended, relating to nondiscrimination on the basis of drug abuse; (f) the Comprehensive Alcohol Abuse and Alcoholism Prevention, Treatment and Rehabilitation Act of 1970 (P.L. 91-616), as amended, relating to nondiscrimination on the basis of alcohol abuse or alcoholism; (g) §§523 and 527 of the Public Health Service Act of 1912 (42 U.S.C. §§290 dd-3 and 290 ee- 3), as amended, relating to confidentiality of alcohol and drug abuse patient records; (h) Title VIII of the Civil Rights Act of 1968 (42 U.S.C. §§3601 et seq.), as amended, relating to nondiscrimination in the sale, rental or financing of housing; (i) any other nondiscrimination provisions in the specific statute(s) under which application for Federal assistance is being made; and, (j) the requirements of any other nondiscrimination statute(s) which may apply to the application.

7. Will comply, or has already complied, with the requirements of Titles II and III of the Uniform Relocation Assistance and Real Property Acquisition Policies Act of 1970 (P.L. 91-646) which provide for fair and equitable treatment of persons displaced or whose property is acquired as a result of Federal or federally-assisted programs. These requirements apply to all interests in real property acquired for project purposes regardless of Federal participation in purchases.

8. Will comply, as applicable, with provisions of the Hatch Act (5 U.S.C. §§1501-1508 and 7324-7328) which limit the political activities of employees whose principal employment activities are funded in whole or in part with Federal funds.

DocuSign Envelope ID: D0F1C0DA-D6A3-4FA9-9404-C74F1B3561FF

9. Will comply, as applicable, with the provisions of the Davis-Bacon Act (40 U.S.C. §§276a to 276a-7), the Copeland Act (40 U.S.C. §276c and 18 U.S.C. §874), and the Contract Work Hours and Safety Standards Act (40 U.S.C. §§327-333), regarding labor standards for federally-assisted construction subagreements.

10. Will comply, if applicable, with flood insurance purchase requirements of Section 102(a) of the Flood Disaster Protection Act of 1973 (P.L. 93-234) which requires recipients in a special flood hazard area to participate in the program and to purchase flood insurance if the total cost of insurable construction and acquisition is $10,000 or more.

11. Will comply with environmental standards which may be prescribed pursuant to the following: (a) institution of environmental quality control measures under the National Environmental Policy Act of 1969 (P.L. 91-190) and Executive Order (EO) 11514; (b) notification of violating facilities pursuant to EO 11738; (c) protection of wetlands pursuant to EO 11990; (d) evaluation of flood hazards in floodplains in accordance with EO 11988; (e) assurance of project consistency with the approved State management program developed under the Coastal Zone Management Act of 1972 (16 U.S.C. §§1451 et seq.); (f) conformity of Federal actions to State (Clean Air) Implementation Plans under Section 176(c) of the Clean Air Act of 1955, as amended (42 U.S.C. §§7401 et seq.); (g) protection of underground sources of drinking water under the Safe Drinking Water Act of 1974, as amended (P.L. 93-523); and, (h) protection of endangered species under the Endangered Species Act of 1973, as amended (P.L. 93-205).

12. Will comply with the Wild and Scenic Rivers Act of 1968 (16 U.S.C. §§1271 et seq.) related to protecting components or potential components of the national wild and scenic rivers system.

13. Will assist the awarding agency in assuring compliance with Section 106 of the National Historic Preservation Act of 1966, as amended (16 U.S.C. §470), EO 11593 (identification and protection of historic properties), and the Archaeological and Historic Preservation Act of 1974 (16 U.S.C. §§469a-1 et seq.).

14. Will comply with P.L. 93-348 regarding the protection of human subjects involved in research, development, and related activities supported by this award of assistance.

15. Will comply with the Laboratory Animal Welfare Act of 1966 (P.L. 89-544, as amended, 7 U.S.C. §§2131 et seq.) pertaining to the care, handling, and treatment of warm blooded animals held for research, teaching, or other activities supported by this award of assistance.

16. Will comply with the Lead-Based Paint Poisoning Prevention Act (42 U.S.C. §§4801 et seq.) which prohibits the use of lead-based paint in construction or rehabilitation of residence structures.

17. Will cause to be performed the required financial and compliance audits in accordance with the Single Audit Act Amendments of 1996 and OMB Circular No. A-133, "Audits of States, Local Governments, and Non-Profit Organizations."

18. Will comply with all applicable requirements of all other Federal laws, executive orders, regulations, and policies governing this program.

19. Will comply with the requirements of Section 106(g) of the Trafficking Victims Protection Act (TVPA) of 2000, as amended (22 U.S.C. 7104) which prohibits grant award recipients or a sub-recipient from (1) Engaging in severe forms of trafficking in persons during the period of time that the award is in effect (2) Procuring a commercial sex act during the period of time that the award is in effect or (3) Using forced labor in the performance of the award or subawards under the award.

SIGNATURE OF AUTHORIZED CERTIFYING OFFICIAL	TITLE
	County Judge
APPLICANT ORGANIZATION	DATE SUBMITTED
Hays County, Texas	02-21-2017

Standard Form 424B (Rev. 7-97) Back

DocuSign Envelope ID: D0F1C0DA-D6A3-4FA9-9404-C74F1B3561FF

CERTIFICATION REGARDING LOBBYING

Certification for Contracts, Grants, Loans, and Cooperative Agreements

The undersigned certifies, to the best of his or her knowledge and belief, that:

(1) No Federal appropriated funds have been paid or will be paid, by or on behalf of the undersigned, to any person for influencing or attempting to influence an officer or employee of an agency, a Member of Congress, an officer or employee of Congress, or an employee of a Member of Congress in connection with the awarding of any Federal contract, the making of any Federal grant, the making of any Federal loan, the entering into of any cooperative agreement, and the extension, continuation, renewal, amendment, or modification of any Federal contract, grant, loan, or cooperative agreement.

(2) If any funds other than Federal appropriated funds have been paid or will be paid to any person for influencing or attempting to influence an officer or employee of any agency, a Member of Congress, an officer or employee of Congress, or an employee of a Member of Congress in connection with this Federal contract, grant, loan, or cooperative agreement, the undersigned shall complete and submit Standard Form-LLL, ''Disclosure of Lobbying Activities,'' in accordance with its instructions.

(3) The undersigned shall require that the language of this certification be included in the award documents for all subawards at all tiers (including subcontracts, subgrants, and contracts under grants, loans, and cooperative agreements) and that all subrecipients shall certify and disclose accordingly. This certification is a material representation of fact upon which reliance was placed when this transaction was made or entered into. Submission of this certification is a prerequisite for making or entering into this transaction imposed by section 1352, title 31, U.S. Code. Any person who fails to file the required certification shall be subject to a civil penalty of not less than $10,000 and not more than $100,000 for each such failure.

Statement for Loan Guarantees and Loan Insurance

The undersigned states, to the best of his or her knowledge and belief, that:

If any funds have been paid or will be paid to any person for influencing or attempting to influence an officer or employee of any agency, a Member of Congress, an officer or employee of Congress, or an employee of a Member of Congress in connection with this commitment providing for the United States to insure or guarantee a loan, the undersigned shall complete and submit Standard Form-LLL, "Disclosure of Lobbying Activities," in accordance with its instructions. Submission of this statement is a prerequisite for making or entering into this transaction imposed by section 1352, title 31, U.S. Code. Any person who fails to file the required statement shall be subject to a civil penalty of not less than $10,000 and not more than $100,000 for each such failure.

* APPLICANT'S ORGANIZATION

Hays County

* PRINTED NAME AND TITLE OF AUTHORIZED REPRESENTATIVE

Prefix: Dr. * First Name: Bert Middle Name:

* Last Name: Cobb Suffix:

* Title: County Judge

* SIGNATURE: * DATE: 02-21-2017

DocuSign Envelope ID: D0F1C0DA-D6A3-4FA9-9404-C74F1B3561FF

Fiscal Federal Funding Accountability and Transparency Act (FFATA) CERTIFICATION

The certifications enumerated below represent material facts upon which DSHS relies when reporting information to the federal government required under federal law. If the Department later determines that the Contractor knowingly rendered an erroneous certification, DSHS may pursue all available remedies in accordance with Texas and U.S. law. Signor further agrees that it will provide immediate written notice to DSHS if at any time Signor learns that any of the certifications provided for below were erroneous when submitted or have since become erroneous by reason of changed circumstances. ***If the Signor cannot certify all of the statements contained in this section, Signor must provide written notice to DSHS detailing which of the below statements it cannot certify and why*.**

Legal Name of Contractor:	**FFATA Contact # 1 Name, Email and Phone Number:**
Hays County	Bert Cobb, M.D. bert.cobb@co.hays.tx.us 512-393-2205
Primary Address of Contractor:	**FFATA Contact #2 Name, Email and Phone Number:**
712 S. Stagecoach Trail, Ste. 1071 San Marcos, TX 78666	Marisol Villarreal-Alonzo Marisol.alonzo@co.hays.tx.us 512-393-2283
ZIP Code: 9-digits Required www.usps.com 7 8 6 6 6 - 6 2 4 7	**DUNS Number: 9-digits Required www.sam.gov** 0 9 7 4 9 4 8 8 4
State of Texas Comptroller Vendor Identification Number (VIN) 14 Digits 1 7 4 6 0 0 2 2 4 1 5 0 0 2	

Printed Name of Authorized Representative	**Signature of Authorized Representative**
Bert Cobb, M.D.	
Title of Authorized Representative	**Date**
County Judge	02-21-2017

DocuSign Envelope ID: D0F1C0DA-D6A3-4FA9-9404-C74F1B3561FF

Fiscal Federal Funding Accountability and Transparency Act (FFATA) CERTIFICATION

As the duly authorized representative (Signor) of the Contractor, I hereby certify that the statements made by me in this certification form are true, complete and correct to the best of my knowledge.

Did your organization have a gross income, from all sources, of less than $300,000 in your previous tax year? ☐ Yes ☒ No

If your answer is "Yes", skip questions "A", "B", and "C" and finish the certification.
If your answer is "No", answer questions "A" and "B".

A. Certification Regarding % of Annual Gross from Federal Awards.

Did your organization receive 80% or more of its annual gross revenue from federal awards during the preceding fiscal year? ☐ Yes ☒ No

B. Certification Regarding Amount of Annual Gross from Federal Awards.

Did your organization receive $25 million or more in annual gross revenues from federal awards in the preceding fiscal year? ☐ Yes ☐ No

If your answer is "Yes" to both question "A" and "B", you must answer question "C".
If your answer is "No" to either question "A" or "B", skip question "C" and finish the certification.

C. Certification Regarding Public Access to Compensation Information.

Does the public have access to information about the compensation of the senior executives in your business or organization (including parent organization, all branches, and all affiliates worldwide) through periodic reports filed under section 13(a) or 15(d) of the Securities Exchange Act of 1934 (15 U.S.C. 78m(a), 78o(d)) or section 6104 of the Internal Revenue Code of 1986? ☐ Yes ☐ No

If your answer is "Yes" to this question, where can this information be accessed?

If your answer is "No" to this question, you must provide the names and total compensation of the top five highly compensated officers below.

Provide compensation information here:

Certificate Of Completion

Envelope Id: D0F1C0DAD6A34FA99404C74F1B3561FF
Status: Sent
Subject: $192,341; 537-18-0059-00001; HAYS COUNTY; IMM-LOCALS
Source Envelope:
Document Pages: 48
Signatures: 0
Envelope Originator:
Supplemental Document Pages: 0
Initials: 0
Jason Jahnke
Certificate Pages: 3
AutoNav: Enabled
Payments: 0
1860 Michael Faraday Dr
EnvelopeId Stamping: Enabled
Reston, VA 20190
Time Zone: (UTC-06:00) Central Time (US & Canada)
jason.jahnke@hhsc.state.tx.us
IP Address: 167.137.1.16

Record Tracking

Status: Original
2/8/2017
Holder: Jason Jahnke
jason.jahnke@hhsc.state.tx.us
Location: DocuSign

Signer Events	Signature	Timestamp
Patty Melchior Patty.Melchior@dshs.state.tx.us Resource Director Department State Health Services Security Level: Email, Account Authentication (None) Electronic Record and Signature Disclosure: Not Offered via DocuSign ID:	**Completed** Using IP Address: 160.42.85.9	Sent: 2/8/2017 Viewed: 2/8/2017 Signed: 2/8/2017
Joe James joe.james@hhsc.state.tx.us Texas Health and Human Services Commission Security Level: Email, Account Authentication (None) Electronic Record and Signature Disclosure: Not Offered via DocuSign ID:	**Completed** Using IP Address: 167.137.1.15	Sent: 2/8/2017 Viewed: 2/9/2017 Signed: 2/9/2017
Bert Cobb, M.D. bert.cobb@co.hays.tx.us Security Level: Email, Account Authentication (None) Electronic Record and Signature Disclosure: Not Offered via DocuSign ID:		Sent: 2/9/2017 Viewed: 2/9/2017
Janna Zumbrun Janna.Zumbrun@dshs.state.tx.us Security Level: Email, Account Authentication (None) Electronic Record and Signature Disclosure: Not Offered via DocuSign ID:		

In Person Signer Events	Signature	Timestamp

Editor Delivery Events	Status	Timestamp

Agent Delivery Events	Status	Timestamp

Intermediary Delivery Events	Status	Timestamp

Certified Delivery Events	Status	Timestamp

Carbon Copy Events	Status	Timestamp
Tray Kirkpatrick tray.kirkpatrick@dshs.state.tx.us Contract Manager Texas Health and Human Services Commission Security Level: Email, Account Authentication (None) Electronic Record and Signature Disclosure: Not Offered via DocuSign ID:	COPIED	Sent: 2/8/2017
Justin Davis justin.davis@dshs.state.tx.us Department of State Health Services Security Level: Email, Account Authentication (None) Electronic Record and Signature Disclosure: Not Offered via DocuSign ID:	COPIED	Sent: 2/8/2017
Amy Greene amy.greene@hhsc.state.tx.us Contract Specialist V Texas Health and Human Services Commission Security Level: Email, Account Authentication (None) Electronic Record and Signature Disclosure: Not Offered via DocuSign ID:	COPIED	Sent: 2/8/2017
Susana Garcia susana.garcia@dshs.state.tx.us Unit Director Texas Health and Human Services Commission Security Level: Email, Account Authentication (None) Electronic Record and Signature Disclosure: Not Offered via DocuSign ID:	COPIED	Sent: 2/8/2017
Jeff Hauff jeff.hauff@co.hays.tx.us Security Level: Email, Account Authentication (None) Electronic Record and Signature Disclosure: Not Offered via DocuSign ID:	COPIED	Sent: 2/9/2017
DSHS CMU Inbox CMUContracts@dshs.texas.gov Security Level: Email, Account Authentication (None) Electronic Record and Signature Disclosure: Not Offered via DocuSign ID:		

Notary Events	Timestamp

Envelope Summary Events	Status	Timestamps

Envelope Summary Events	Status	Timestamps
Envelope Sent	Hashed/Encrypted	2/9/2017

Payment Events	Status	Timestamps

AGENDA ITEM REQUEST FORM

Hays County Commissioners Court

Tuesdays at 9:00 AM

Request forms are due in Microsoft Word Format via email by 2:00 p.m. on Wednesday.

AGENDA ITEM

Authorize the County Judge to submit a grant application to the Texas Department of State Health Services (DSHS) for the Tuberculosis Prevention & Control for FY2018 State Funds in the amount of $25,875.00.

ITEM TYPE	MEETING DATE	AMOUNT REQUIRED
CONSENT	February 21, 2017	$5,175.00

LINE ITEM NUMBER

AUDITOR USE ONLY

AUDITOR COMMENTS:

PURCHASING GUIDELINES FOLLOWED: N/A **AUDITOR REVIEW:** MARISOL VILLARREAL-ALONZO

REQUESTED BY	SPONSOR	CO-SPONSOR
Garza/Hauff	COBB	N/A

SUMMARY

DSHS provides funding to local health departments for the identification and treatment of those persons with, or exposed to, tuberculosis (TB). The state funding is $25,875, with a 20% match ($5,175.00) required of the County for participation in the program, for a total project amount of $31,050.00. The match will be budgeted within the Health Department for fiscal 2018 from existing salaries, benefits, and operating expenses. The funding period for this program is from September 1, 2017 through August 31, 2018.

Inter-Local Application For Tuberculosis Prevention and Control for FY 2018 State Funds

http://www.dshs.state.tx.us/idcu/disease/tb

TB Services Branch

1100 W. 49th Street
P. O. Box 149347, MS 1990
Austin, Texas 78714

TABLE OF CONTENTS

A. FACE PAGE/INSTRUCTIONS – Inter-Local Application for Financial Assistance

B. APPLICATION TABLE OF CONTENTS AND CHECKLIST

C. CONTACT PERSON INFORMATION

D. ADMINISTRATIVE INFORMATION (with supplemental documentation attached if required)

E. ORGANIZATION, RESOURCES AND CAPACITY

F. PERFORMANCE MEASURES

Department of State Health Services
Form A Face Page – Tuberculosis (TB) Funding

RESPONDENT INFORMATION

1) LEGAL BUSINESS NAME: Hays County Local Health Department

2) MAILING Address Information (include mailing address, street, city, county, state and 9-digit zip code): Check if address change ☐
111 E. San Antonio St., Ste. 300, San Marcos,Texas 78666-5534

3) PAYEE Name and Mailing Address, including 9-digit zip code (if different from above): Check if address change ☐
Hays County Treasurer, 712 S Stagecoach Trl., Ste. 1094, San Marcos, Texas 78666-6247

4) DUNS Number (9-digit) required if receiving federal funds: 09-7494884

5) Federal Tax ID No. (9-digit), State of Texas Comptroller Vendor ID Number (14-digit) or Social Security Number (9-digit): 74-6002241,174-6002241-5002

**The respondent acknowledges, understands and agrees that the respondent's choice to use a social security number as the vendor identification number for the contract, may result in the social security number being made public via state open records requests.*

6) TYPE OF ENTITY (check all that apply):

☐ City	☐ Nonprofit Organization*	☐ Individual
☒ County	☐ For Profit Organization*	☐ Federally Qualified Health Centers
☐ Other Political Subdivision	☐ HUB Certified	☐ State Controlled Institution of Higher Learning
☐ State Agency	☐ Community-Based Organization	☐ Hospital
☐ Indian Tribe	☐ Minority Organization	☐ Private
	☐ Faith Based (Nonprofit Org)	☐ Other (specify): _____

**If incorporated, provide 10-digit charter number assigned by Secretary of State:*

7) PROPOSED BUDGET PERIOD: Start Date: 09-01-2018 End Date: 08-31-2020

8) COUNTIES SERVED BY PROJECT: Hays

9) AMOUNT OF FUNDING REQUESTED: $25,875.00

10) PROJECTED EXPENDITURES

Does respondent's projected federal expenditures exceed $500,000, or its projected state expenditures exceed $500,000, for respondent's current fiscal year (excluding amount requested in line 9 above)? **

Yes ☒ No ☐

***Projected expenditures should include anticipated expenditures under all federal grants including "pass through" federal funds from all state agencies, or all anticipated expenditures under state grants, as applicable.*

11) PROJECT CONTACT PERSON

Name: Iris Barrera
Phone: 512-393-5569
Fax: 512-393-5530
Email: Iris.barrera@co.hays.tx.us

12) FINANCIAL OFFICER

Name: Marisol Villarreal-Alonzo
Phone: 512-393-2283
Fax: 512-393-2248
Email: Marisol.alonzo@co.hays.tx.us

The facts affirmed by me in this proposal are truthful and I warrant the respondent is in compliance with the assurances and certifications co ntained in APPENDIX B: DSHS Assurances and Certifications. I understand the truthfulness of the facts affirmed herein and the continuing compliance with these requirements are conditions precedent to the award of a contract. This document has been duly authorized by the governing body of the respondent and I (the person signing below) am authorized to represent the respondent.

13) AUTHORIZED REPRESENTATIVE Check if change ☐

Name: Bert Cobb, M.D.
Title: County Judge
Phone: 512-393-2205
Fax: 512-393-2248
Email: bert.cobb@co.hays.tx.us

14) SIGNATURE OF AUTHORIZED REPRESENTATIVE

15) DATE

February 21, 2017

FORM A: FACE PAGE INSTRUCTIONS

This form provides basic information about the respondent and the proposed project with the Department of State Health Services (DSHS), including the signature of the authorized representative. It is the cover page of the proposal and is required to be completed. Signature affirms the facts contained in the respondent's response are truthful and the respondent is in compliance with the assurances and certifications contained in APPENDIX B: DSHS Assurances and Certifications and acknowledges that continued compliance is a condition for the award of a contract. Please follow the instructions below to complete the face page form and return with the respondent's proposal.

1) LEGAL BUSINESS NAME - Enter the legal name of the respondent.

2) MAILING ADDRESS INFORMATION - Enter the respondent's complete physical address and mailing address, city, county, state, and 9-digit zip code.

3) PAYEE NAME AND MAILING ADDRESS - Payee – Entity involved in a contractual relationship with respondent to receive payment for services rendered by respondent and to maintain the accounting records for the contract; i.e., fiscal agent. Enter the PAYEE's name and mailing address, including 9-digit zip code, if PAYEE is different from the respondent. The PAYEE is the corporation, entity or vendor who will be receiving payments.

4) DUNS Number – 9- digit Dun and Bradstreet Data Universal Numbering System (DUNS) number. . This number is required if receiving ANY federal funds and can be obtained at: http://fedgov.dnb.com/webform

5) FEDERAL TAX ID or STATE OF TEXAS COMPTROLLER VENDOR ID NUMBER OR SOCIAL SECURITY NUMBER - Enter the Federal Tax Identification Number (9-digit) or the Texas Vendor Identification Number assigned by the Texas State Comptroller (14-digit). *The respondent acknowledges, understands and agrees the respondent's choice to use a social security number as its vendor identification number for the contract, may result in the social security number being made public via state open records requests.

6) TYPE OF ENTITY - Check the type of entity as defined by the Secretary of State at http://www.sos.state.tx.us/corp/businessstructure.shtml and/or the Texas State Comptroller at https://fmx.cpa.state.tx.us/fmx/pubs/tins/tinsguide/2009-04/TINS_Guide_0409.pdf and check all other boxes that describe the entity.

   Historically Underutilized Business: A minority or women-owned business as defined by Texas Government Code, Title 10, Subtitle D, Chapter 2161. (http://www.window.state.tx.us/procurement/prog/hub/)
   State Agency: an agency of the State of Texas as defined in Texas Government Code §2056.001.ii
   Institutions of higher education as defined by §61.003 of the Education Code.
   MINORITY ORGANIZATION is defined as an organization in which the Board of Directors is made up of 50% racial or ethnic minority members.
   If a Non-Profit Corporation or For-Profit Corporation, provide the 10-digit charter number assigned by the Secretary of State.

7) PROPOSED BUDGET PERIOD - Enter the budget period for this proposal. Budget period is defined in the RFP.

8) COUNTIES SERVED BY PROJECT - Enter the proposed counties served by the project.

9) AMOUNT OF FUNDING REQUESTED - Enter the amount of funding requested from DSHS for proposed project activities (not including possible renewals). This amount must match column (1) row K from the BUDGET SUMMARY used for cost reimbursement budgets.

10) PROJECTED EXPENDITURES - If respondent's projected federal expenditures exceed $500,000 or its projected state expenditures exceed $500,000 for respondent's current fiscal year, respondent must arrange for a financial compliance audit (Single Audit).

11) PROJECT CONTACT PERSON - Enter the name, phone, fax, and email address of the person responsible for the proposed project.

12) FINANCIAL OFFICER - Enter the name, phone, fax, and email address of the person responsible for the financial aspects of the proposed project.

13) AUTHORIZED REPRESENTATIVE - Enter the name, title, phone, fax, and email address of the person authorized to represent the respondent. Check the "Check if change" box if the authorized representative is different from previous submission to DSHS.

14) SIGNATURE OF AUTHORIZED REPRESENTATIVE - The person authorized to represent the respondent must sign in this blank.

15) DATE - Enter the date the authorized representative signed this form.

FORM B: Inter-Local APPLICATION CHECKLIST

Legal Name of applicant: Hays County Local Health Department

This form is provided to ensure that the application is complete, proper signatures are included, and the required assurances, certifications, and attachments have been submitted.

FORM	DESCRIPTION	Included
A	Face Page completed, and proper signatures and date included	X
B	Application Checklist completed and included	X
C	Contact Person Information completed and included	X
D	Administrative Information completed and included (with supplemental documentation attached if required)	X
E	Organization, Resources and Capacity included	X
F	Performance Measures included	X

FORM C: CONTACT PERSON INFORMATION

Legal Business Name of Contractor: Hays County Local Health Department

This form provides information about the appropriate contacts in the contractor's organization in addition to those on FORM A: FACE PAGE. If any of the following information changes during the term of the contract, please send written notification to the ***Contract Management Unit.***

Contact:	Jeff Hauff	Mailing Address (incl. street, city, county, state, & zip):
Title:	Grants Administrator	712 S Stagecoach Trl., Ste. 1204
Phone:	512-393-2209	San Marcos
Fax:	512-393-2458	Hays
E-mail:	Jeff.hauff@co.hays.tx.us	Texas, 78666

Contact:	Vickie Dorsett	Mailing Address (incl. street, city, county, state, & zip):
Title:	Asst. County Auditor	712 S. Stagecoach Trl, Ste. 1071
Phone:	512-393-2283	San Marcos
Fax:	512-393-2248	Hays
E-mail:	Vickie.dorsett@co.hays.tx.us	Texas, 78666

Contact:	James "Clint" Garza	Mailing Address (incl. street, city, county, state, & zip):
Title:	Development Services, Director	2171 Yarrington Road
Phone:	512-393-2150	San Marcos
Fax:	512-493-1915	Hays
E-mail:	James.garza@co.hays.tx.us	Texas, 78666

FORM D: ADMINISTRATIVE INFORMATION - ILA

This form provides information regarding identification and contract history on the applicant, executive management, project management, governing board members, and/or principal officers. Respond to each request for information ***or provide the required supplemental document behind this form.*** *If responses require multiple pages, identify the supporting pages/documentation with the applicable request.*

Legal Name of Applicant: Hays County Local Health Department

Identifying Information

The applicant shall attach the following information:

- Names (last, first, middle) and addresses for the officials who are authorized to enter into a contract on behalf of the applicant.

Conflict of Interest and Contract History

The applicant shall disclose any existing or potential conflict of interest relative to the performance of the requirements of this Application for Funding. Examples of potential conflicts may include an existing business or personal relationship between the applicant, its principal, or any affiliate or subcontractor, with DSHS, the participating agencies, or any other entity or person involved in any way in any project that is the subject of this Application for Funding. Similarly, any personal or business relationship between the applicant, the principals, or any affiliate or subcontractor, with any employee of DSHS, a participating agency, or their respective suppliers, must be disclosed. Any such relationship that might be perceived or represented as a conflict shall be disclosed. Failure to disclose any such relationship may be cause for contract termination or disqualification of the proposal. If, following a review of this information, it is determined by DSHS that a conflict of interest exists, the applicant may be disqualified from further consideration for the award of a contract.

1. Does anyone in the applicant organization have an existing or potential conflict of interest relative to the performance of the requirements of this Application for Funding?

☐ **YES** **NO** ☒

If YES, detail any such relationship(s) that might be perceived or represented as a conflict. (Attach no more than one additional page.)

2. Has any member of applicant's executive management, project management, governing board or principal officers been employed by the State of Texas 24 months prior to the application due date?

☐ **YES** **NO** ☒

If YES, indicate his/her name, social security number, job title, agency employed by, separation date, and reason for separation.

3. Has applicant had a contract with DSHS within the past 24 months?

☒ **YES** ☐ **NO**

If YES, indicate the contract number(s):

Contract Number(s)	
Contract Number	Grant
2015-001304-00	RLSS/LPHS
2015-003617-00	PHEP-EBOLA
2016-001292-00	Immunization
2016-001304-00	RLSS/LPHS
2016-001268-00	CPS/Hazard
2016-001414-00	TB State
2016-003841-00	IDCU/SUREB
2015-004044-00	BPR/PHEP
2015-047185	PHEP- One time funding
2016-001423-00	TB Federal
2016-001292-01	Immunization

If NO, applicant must be able to demonstrate fiscal solvency. Submit a copy of the organization's most recently audited balance sheet, statement of income and expenses and accompanying financial footnotes DSHS will evaluate the documents that are submitted and may, at its sole discretion, reject the proposal on the grounds of the applicant's financial capability.

4. Is applicant or any member of applicant's executive management, project management, board members or principal officers:

- Delinquent on any state, federal or other debt;
- Affiliated with an organization which is delinquent on any state, federal or other debt; or
- In default on an agreed repayment schedule with any funding organization?

☐ **YES** **NO** ☒

If YES, please explain. (Attach no more than one additional page.)

FORM E: ORGANIZATION, RESOURCES AND CAPACITY
(Organizational Chart)

FORM F: PERFORMANCE MEASURES

In the event a contract is awarded, applicant agrees that performance measures will be used to assess, in part, the applicant's effectiveness in providing the services described.

1. For FY18 reporting, data will be drawn from calendar year 2017 (1/1/2017 -12/31/2017). A compliance percentage of not less than 85.3% is required. If fewer than 85.3% of newly reported TB cases have a result of an HIV test reported, then DSHS may (at its sole discretion) require additional measures be taken by Contractor to improve that percentage, on a timeline set by DSHS.

2. Cases, and suspected cases, of TB under treatment by Contractor shall be placed on timely and appropriate Directly Observed Therapy (DOT).
   For FY18 reporting, data will cover all cases from calendar year 2017 (1/1/2017 -12/31/2017). A compliance percentage of not less than 93.4% is required.
   If data indicates a compliance percentage for this Performance Measure of less than 93.4%, then DSHS may (at its sole discretion) require additional measures be taken by Contractor to improve that percentage, on a timeline set by DSHS.

3. Newly-reported suspected cases of TB disease shall be started in timely manner on the recommended initial 4-drug regimen. For FY18 reporting, data will be drawn from calendar year 2017 (1/1/2017 - 12/31/2017). A compliance percentage of not less than 93.4% is required. If fewer than 93.5% of newly-reported TB cases are started on an initial 4-drug regimen in accordance with this requirement, then DSHS may (at its sole discretion) require additional measures be taken by Contractor to improve that percentage, on a timeline set by DSHS.

4. Newly-reported TB patients that are older than 12-years-old and that have a pleural or respiratory site of disease shall have sputum acid-fast bacilli (AFB)-culture results reported to DSHS according to the timelines for reporting initial and updated results given herein.
   For FY18 reporting, data will be drawn from calendar year 2017 (1/1/2017 -12/31/2017). A compliance percentage of not less than 93.5% is required.
   If data indicates a compliance percentage for this Performance Measure of less than 93.5%, then DSHS may (at its sole discretion) require additional measures be taken by Contractor to improve that percentage, on a timeline set by DSHS.

5. Newly-reported cases of TB with AFB positive sputum culture results will have documented conversion to sputum culture-negative within 60 days of initiation of treatment. For FY18 reporting, data will be drawn from calendar year 2016(1/1/2016-12/31/2016). A compliance percentage of not less than 56% is required. If data indicates a compliance percentage for this Performance Measure of less than 56%, then DSHS may (at its sole discretion) require additional measures be taken by contractor to improve the percentage, on a timeline set by DSHS.
6. Newly diagnosed TB cases that are eligible* to complete treatment within 12 months shall complete therapy within 365 days or less.*Exclude TB cases 1) diagnosed at death, 2) who die during therapy, 3) who are resistant to Rifampin, 4) who have meningeal disease, and/or 5) who are younger than 15 years with either miliary disease or a positive blood culture for TB. For FY18 reporting, data will cover all cases from calendar year 2016 (1/1/2016 -12/31/2016). A compliance percentage of not less than 90.6% is required. If data indicates a compliance percentage for this Performance Measure of less than 90.6%,

then DSHS may (at its sole discretion) require additional measures be taken by Contractor to improve that percentage, on a timeline set by DSHS.

7. Increase the proportion of culture-confirmed TB cases with a genotyping result reported. For FY18 reporting, data will be drawn from calendar year 2017 (1/1/2017 -12/31/2017). A compliance percentage of not less than 90.6 is required. If data indicates a compliance percentage for this Performance Measure of less than 90.6%, then DSHS may (at its sole discretion) require additional measures be taken by Contractor to improve that percentage, on a timeline set by DSHS.
8. TB cases with initial cultures positive for Mycobacterium tuberculosis complex shall be tested for drug susceptibility and have those results documented in their medical record. For FY18 reporting, data will be drawn from calendar year 2017 (1/1/2017 -12/31/2017). A compliance percentage of not less than 98.0% is required. If data indicates a compliance percentage for this Performance Measure of less than 98.0%, then DSHS may (at its sole discretion) require additional measures be taken by Contractor to improve that percentage, on a timeline set by DSHS.
9. Newly-reported TB patients with a positive AFB sputum-smear result shall have at least three contacts identified as part of the contact investigation that must be pursued for each case. For FY18 reporting, data will be drawn from calendar year 2017 (1/1/2017 -12/31/2017). A compliance percentage of not less than 96.0% is required. If data indicates a compliance percentage for this Performance Measure of less than 96.0%, then DSHS may (at its sole discretion) require additional measures be taken by Contractor to improve that percentage, on a timeline set by DSHS.
10. Newly-identified contacts, identified through the contact investigation, that are associated with a sputum AFB smear-positive TB case shall be evaluated for TBI and disease. For FY18 reporting, data will be drawn from calendar year 2016 (1/1/2016 -12/31/2016). A compliance percentage of not less than 88.0% is required. If data indicates a compliance percentage for this Performance Measure of less than 88.0%, then DSHS may (at its sole discretion) require additional measures be taken by Contractor to improve that percentage, on a timeline set by DSHS.
11. Contacts, identified through the contact investigation, that are associated with a sputum AFB smear-positive case and that are newly diagnosed with TBI shall be started on timely and appropriate treatment. For FY18 reporting, data will be drawn from calendar year 2016 (1/1/2016 -12/31/2016). A compliance percentage of not less than 70% is required. If data indicates a compliance percentage for this Performance Measure of less than 70%, then DSHS may (at its sole discretion) require additional measures be taken by Contractor to improve that percentage, on a timeline set by DSHS.
12. Contacts, identified through the contact investigation, that are associated with a sputum AFB smear-positive case that are newly diagnosed with TBI and that were started on treatment shall complete treatment for TBI as described in Targeted Tuberculin Testing and Treatment of Latent TB Infection (LTBI), Morbidity and Mortality Weekly Report, Vol. 49, No. RR-6, 2000; according to timelines given, therein. For FY18 reporting, data will be drawn from calendar year 2016 (1/1/2016 -12/31/2016). A compliance percentage of not less than 64.0% is required. If data indicates a compliance percentage for this Performance Measure of less than 64.0%, then DSHS may (at its sole discretion) require additional measures be taken by Contractor to improve that percentage, on a timeline set by DSHS.
13. For Class B immigrants and refugees with abnormal chest x-rays read overseas as consistent with TB, increase the proportion who initiate a medical evaluation within 30 days of arrival. Arrival is defined as the first notice or report; whether that is by fax, phone call, visit to the health department or EDN notification. For FY18 reporting, data will be drawn from calendar year 2017 (1/1/2017 -12/31/2017). A compliance percentage of not less than 63.5% is required. If data indicates a compliance percentage for this Performance Measure of less than 63.5%, then DSHS may (at its sole discretion) require additional measures be taken by Contractor to improve that percentage, on a timeline set by DSHS.
14. For Class B immigrants and refugees with abnormal chest x-rays read overseas as consistent with TB, increase the proportion who initiate and complete a medical evaluation within 90 days of arrival. For FY18 reporting data will be drawn from calendar year 2017 (1/1/2017-12/31/2017). A compliance percentage of not less than 50.0% is required. If data indicates a compliance percentage for this Performance Measure of less than 60%, then DSHS may (at its sole discretion) require additional

measures be taken by Contractor to improve that percentage, on a timeline set by DSHS.

15. For Class B immigrants and refugees with abnormal chest x-rays read overseas as consistent with TB and who are diagnosed with TBI during evaluation in the US, increase the proportion who start treatment. For FY18 reporting, data will be drawn from calendar year 2017 (1/1/2017 -12/31/2017). A compliance percentage of not less than 74.0% is required. If data indicates a compliance percentage for this Performance Measure of less than 74.0%, then DSHS may (at its sole discretion) require additional measures be taken by Contractor to improve that percentage, on a timeline set by DSHS.
16. For Class B immigrants and refugees with abnormal chest x-rays read overseas as consistent with TB and who are diagnosed with TB infection during evaluation in the US and started on treatment, increase the proportion who complete treatment for TB infection. For FY18 reporting, data will be drawn from calendar year 2016 (1/1/2016 -12/31/2016). A compliance percentage of not less than 59.0% is required. If data indicates a compliance percentage for this Performance Measure of less than 70%, then DSHS may (at its sole discretion) require additional measures be taken by Contractor to improve that percentage, on a timeline set by DSHS

    If Contractor fails to meet any of the performance measures, Contractor shall furnish in the Annual Progress Report, due March 15, 2017, a written narrative explaining the barriers and the plan to address those barriers. This requirement does not excuse any violation of this Contract, nor does it limit DSHS as to any options available under the contract regarding breach
17. Transfer of 100% of collected TB case information, including but not limited to RVCTs, TB340, and TB341, to DSHS Program weekly by the close of business each Friday. Contractor may send a written request to DSHS Program to extend the timetable for transferring data, which must be received at least 24 hours in advance of the deadline at issue. Any such request shall be submitted by email.
18. Provide complete and legitimate information for the following seven (7) data elements for 100% of all submitted RVCT: 1)Date reported; 2)Legal name; 3)Date of birth; 4)Race and ethnicity; 5)Country of origin, if not U.S. Date of entry into U.S.; 5)Laboratory data necessary to meet case definition as applicable; 6)Count status and date counted; 7)Verification of Texas residency physical address, city, county, ZIP code with 4-digit code (and if in or outside city limits) If diagnosed while in a facility or shelter, provide facility or shelter name Initial drug susceptibility results, as applicable

    If data indicates that this requirement is being met less than ninety-eight-point-six percent (98.6%) of the time, DSHS may (at its sole discretion) require additional measures be taken by Contractor to improve that percentage. In that scenario, Contractor must follow those additional measures, and do so according to the timetable mandated by DSHS.

19. Provide complete and legitimate information for the following ten (10) data elements to be reported on 100% of all reported individual contacts to sputum smear positive patients: 1)Name of linked case; 2)RVCT number of linked case; 3)Exposure length and setting; 4)HIV test results; 5)Priority status; 6)TST/IGRA test results 7)CXR date and interpretation; 8)Verification that a complete evaluation was performed. A complete evaluation for purposes of the contact aggregate report consists of a TST or IGRA result. If positive, a CXR date is required; 9)Diagnosis with an ATS classification (If prior positive TST or IGRA, or the possibility of the contact not returning for a chest x-ray, complete the DSHS TB-202 form for a Tuberculosis Health Assessment History or the equivalent thereof); 10)If evaluation was not performed, then provide a reason

    If data indicates that this requirement is being met less than one-hundred percent (100%) of the time, DSHS may (at its sole discretion) require additional measures be taken by Contractor to improve that percentage. In that scenario, Contractor must follow those additional measures, and do so according to the timetable mandated by DSHS.

Contractor shall maintain documentation used to calculate performance measures as required by General Provisions Article VIII "Records Retention" and by Texas Administrative Code Title 22, Part 9 Chapter 165, §165.1 regarding retention of medical records.

All reporting to DSHS shall be completed as described in Section I, "D. Reporting" and submitted by the deadlines given.

If Contractor fails to meet any of the performance measures, Contractor shall furnish in the Annual Progress Report, due March 15, 2016, a written narrative explaining the barriers and the plan to address those barriers. This requirement does not excuse any violation of this Contract, nor does it limit DSHS as to any options available under the contract regarding breach.

FORM I: BUDGET SUMMARY (REQUIRED)

Legal Name of Respondent: Hays County

Budget Categories	Total Budget (1)	DSHS Funds Requested (2)	Direct Federal Funds (3)	Other State Agency Funds* (4)	Local Funding (Match) (5)	Other Funds (6)
A. Personnel	$16,987	$16,987			$0	
B. Fringe Benefits	$8,888	$8,888			$0	
C. Travel	$0	$0			$0	
D. Equipment	$0	$0			$0	
E. Supplies	$0	$0			$0	
F. Contractual	$5,175	$0			$5,175	
G. Other	$0	$0			$0	
H. Total Direct Costs	$31,050	$25,875	$0	$0	$5,175	$0
I. Indirect Costs	$0	$0			$0	
J. Total (Sum of H and I)	$31,050	$25,875	$0	$0	$5,175	$0
K. Program Income - Projected Earnings	$0	$0	$0	$0	$0	$0

NOTE: The "Total Budget" amount for each Budget Category will have to be populated among the funding sources. Enter amounts in whole dollars for (3), (4), & (6), *if applicable*. After amounts have been entered for each funding source, verify that the "Distribution Total" below equals the respective amount under the "Total Budget" from column (1).

	Budget Catetory	Distribution Total	Budget Total	Budget Category	Distribution Total	Budget Total
Check Totals For:	Personnel	$16,987	$16,987	Fringe Benefits	$8,888	$8,888
	Travel	$0	$0	Equipment	$0	$0
	Supplies	$0	$0	Contractual	$5,175	$5,175
	Other	$0	$0	Indirect Costs	$0	$0

TOTAL FOR:	Distribution Totals	$31,050	Budget Total	$31,050

*Letter(s) of good standing that validate the respondent's programmatic, administrative, and financial capability must be placed after this form if respondent receives any funding from state agencies other than DSHS related to this project. If the respondent is a state agency or institution of higher education, letter(s) of good standing are not required. DO NOT include funding from other state agencies in column 4 or Federal sources in column 3 that is not related to activities being funded by this DSHS project.

Revised: 7/6/2009

AGENDA ITEM REQUEST FORM

Hays County Commissioners Court

Tuesdays at 9:00 AM

Request forms are due in Microsoft Word Format via email by 2:00 p.m. on Wednesday.

AGENDA ITEM

Approve the transfer of a 2008 Dodge Charger and equipment from the Sheriff's Office to Constable Pct. 1.

ITEM TYPE	MEETING DATE	AMOUNT REQUIRED
CONSENT	February 21, 2017	

LINE ITEM NUMBER

AUDITOR USE ONLY

AUDITOR COMMENTS:

PURCHASING GUIDELINES FOLLOWED: N/A **AUDITOR REVIEW:** MARISOL VILLARREAL-ALONZO

REQUESTED BY	SPONSOR	CO-SPONSOR
CUTLER	COBB	N/A

SUMMARY

The Sheriff's Office is seeking approval to transfer the following assets from the Sheriff's Office inventory to Constable Pct. 1.

2008 Dodge Charger
VIN: 2B3KA43G88H180651
County Tag ID: 16704

Cage
Serial number: N/A
County Tag ID: 16708

Mobile Camera
Serial number: DV10 116439
County Tag ID: 16705

Radar
Serial number: DS 24006
County Tag ID: 16706

HAYS COUNTY AUDITOR - GENERAL FIXED ASSET TRANSFER FORM

*******THIS FORM IS NOT TO BE USED FOR THE TRANSFER OF COMPUTER EQUIPMENT*******

To be completed for all transfers of general fixed assets between departments and returned to Auditor

To be completed by Transferring Department

***** ONLY ONE GENERAL FIXED ASSET PER FORM *****

DESCRIPTION OF ITEM (Including Manufacturer and Model Number)

2008 Dodge Charger

Fixed Asset County Tag Number:

16704

Serial Number:

2B3KA43G88H180651

Department Name:

Hays County Sheriff

Location:

1307 Uhland Road, San Marcos, TX 78666

Transfer agreed to by Elected Official/Department Head:

(signature)

Date:

****

To be Completed by Department to which asset is transferred

TRANSFERRED TO
Department Name:

Constable Pct 1

Location:

San Marcos, TX

Transfer accepted by Elected Official / Department Head

(signature)

Date:

To be Completed for assets to be auctioned

ASSET TO BE HELD AT WAREHOUSE ☐

Received at Warehouse By:

ASSET TO BE HELD AT PURCHASING ☐

Received at Purchasing By:

Date _____

To be completed by Purchasing Office Only

ASSET SOLD IN COUNTY AUCTION ON

_____

(Auction Date)

****

AUDITOR OFFICE USE ONLY

Fixed Asset System Updated:

Date _____

Initials _____

AUDITOR OFFICE USE ONLY

Asset Deleted from System After Auction:

Date _____

Initials _____

HAYS COUNTY AUDITOR - GENERAL FIXED ASSET TRANSFER FORM

*******THIS FORM IS NOT TO BE USED FOR THE TRANSFER OF COMPUTER EQUIPMENT*******

To be completed for all transfers of general fixed assets between departments and returned to Auditor

To be completed by Transferring Department

***** ONLY ONE GENERAL FIXED ASSET PER FORM *****

DESCRIPTION OF ITEM (Including Manufacturer and Model Number)

Cage

Fixed Asset County Tag Number:

16708

Serial Number:

N/A

Department Name:

Hays County Sheriff

Location:

1307 Uhland Rd San Marcos TX

Transfer agreed to by Elected Official/Department Head:

(signature)

Date:

****

To be Completed by Department to which asset is transferred

TRANSFERRED TO
Department Name:

Pct 1

Location:

San Marcos, TX

Transfer accepted by Elected Official / Department Head

(signature)

Date:

To be Completed for assets to be auctioned

ASSET TO BE HELD AT WAREHOUSE ☐

Received at Warehouse By:

ASSET TO BE HELD AT PURCHASING ☐

Received at Purchasing By:

Date _____

To be completed by Purchasing Office Only

ASSET SOLD IN COUNTY AUCTION ON

_____

(Auction Date)

****

AUDITOR OFFICE USE ONLY

Fixed Asset System Updated:

Date _____

Initials _____

AUDITOR OFFICE USE ONLY

Asset Deleted from System After Auction:

Date _____

Initials _____

HAYS COUNTY AUDITOR - GENERAL FIXED ASSET TRANSFER FORM

*******THIS FORM IS NOT TO BE USED FOR THE TRANSFER OF COMPUTER EQUIPMENT*******

To be completed for all transfers of general fixed assets between departments and returned to Auditor

To be completed by Transferring Department

***** ONLY ONE GENERAL FIXED ASSET PER FORM *****

DESCRIPTION OF ITEM (Including Manufacturer and Model Number)

Mobile camera

Fixed Asset County Tag Number:

16705

Serial Number:

DV10 116439

Department Name:

Hays County Sheriff

Location:

1307 Uhland Road San Marcos TX

Transfer agreed to by Elected Official/Department Head:

(signature)

Date:

****

To be Completed by Department to which asset is transferred

TRANSFERRED TO
Department Name:

Pct 1 Constable

Location:

San Marcos, TX

Transfer accepted by Elected Official / Department Head

(signature)

Date:

To be Completed for assets to be auctioned

ASSET TO BE HELD AT WAREHOUSE ☐

Received at Warehouse By:

ASSET TO BE HELD AT PURCHASING ☐

Received at Purchasing By:

Date _____

To be completed by Purchasing Office Only

ASSET SOLD IN COUNTY AUCTION ON

_____

(Auction Date)

****

AUDITOR OFFICE USE ONLY

Fixed Asset System Updated:

Date _____

Initials _____

AUDITOR OFFICE USE ONLY

Asset Deleted from System After Auction:

Date _____

Initials _____

HAYS COUNTY AUDITOR - GENERAL FIXED ASSET TRANSFER FORM

*******THIS FORM IS NOT TO BE USED FOR THE TRANSFER OF COMPUTER EQUIPMENT*******

To be completed for all transfers of general fixed assets between departments and returned to Auditor

To be completed by Transferring Department

***** ONLY ONE GENERAL FIXED ASSET PER FORM *****

DESCRIPTION OF ITEM (Including Manufacturer and Model Number)

Radar

Fixed Asset County Tag Number:

16706

Serial Number:

DS 24006

Department Name:

Hays County Sheriff

Location:

1307 Uhland Rd San Marcos TX 78666

Transfer agreed to by Elected Official/Department Head:

(signature)

Date:

****

To be Completed by Department to which asset is transferred

TRANSFERRED TO
Department Name:

Pct 1 Constable

Location:

San Marcos, TX

Transfer accepted by Elected Official / Department Head

(signature)

Date:

To be Completed for assets to be auctioned

ASSET TO BE HELD AT WAREHOUSE ☐

Received at Warehouse By:

ASSET TO BE HELD AT PURCHASING ☐

Received at Purchasing By:

Date _____

To be completed by Purchasing Office Only

ASSET SOLD IN COUNTY AUCTION ON

_____

(Auction Date)

****

AUDITOR OFFICE USE ONLY

Fixed Asset System Updated:

Date _____

Initials _____

AUDITOR OFFICE USE ONLY

Asset Deleted from System After Auction:

Date _____

Initials _____

AGENDA ITEM REQUEST FORM

Hays County Commissioners Court

Tuesdays at 9:00 AM

Request forms are due in Microsoft Word Format via email by 2:00 p.m. on Wednesday.

AGENDA ITEM

Approve the transfer of a 2008 Dodge Charger and equipment from the Sheriff's Office to Constable Pct. 3.

ITEM TYPE	MEETING DATE	AMOUNT REQUIRED
CONSENT	February 21, 2017	

LINE ITEM NUMBER

AUDITOR USE ONLY

AUDITOR COMMENTS:

PURCHASING GUIDELINES FOLLOWED: N/A **AUDITOR REVIEW:** MARISOL VILLARREAL-ALONZO

REQUESTED BY	SPONSOR	CO-SPONSOR
CUTLER	COBB	N/A

SUMMARY

The Sheriff's Office is seeking approval to transfer the following assets from the Sheriff's Office inventory to Constable Pct. 3.

2008 Dodge Charger
VIN: 2B3KA43G58H180638
County Tag ID: 16716

Cage
Serial number: N/A
County Tag ID: 16720

Mobile Camera
Serial number: DV10 116438
County Tag ID: 16591

Radar
Serial number: DS 24025
County Tag ID: 16718

Light Bar
Serial number: 960L 49 7F7R

HAYS COUNTY AUDITOR - GENERAL FIXED ASSET TRANSFER FORM

*******THIS FORM IS NOT TO BE USED FOR THE TRANSFER OF COMPUTER EQUIPMENT*******

To be completed for all transfers of general fixed assets between departments and returned to Auditor

To be completed by Transferring Department

***** ONLY ONE GENERAL FIXED ASSET PER FORM *****

DESCRIPTION OF ITEM (Including Manufacturer and Model Number)

2008 Dodge Charger

Fixed Asset County Tag Number:

16716

Serial Number:

2B3KA43G58H180638

Department Name:

Hays County Sheriff

Location:

1307 Uhland Road, San Marcos, TX 78666

Transfer agreed to by Elected Official/Department Head:

(signature)

Date:

****

To be Completed by Department to which asset is transferred

TRANSFERRED TO
Department Name:

Constable Pct 3

Location:

Wimberley, TX

Transfer accepted by Elected Official / Department Head

(signature)

Date:

To be Completed for assets to be auctioned

ASSET TO BE HELD AT WAREHOUSE ☐

Received at Warehouse By:

ASSET TO BE HELD AT PURCHASING ☐

Received at Purchasing By:

Date _____

To be completed by Purchasing Office Only

ASSET SOLD IN COUNTY AUCTION ON

_____

(Auction Date)

****

AUDITOR OFFICE USE ONLY

Fixed Asset System Updated:

Date _____

Initials _____

AUDITOR OFFICE USE ONLY

Asset Deleted from System After Auction:

Date _____

Initials _____

HAYS COUNTY AUDITOR - GENERAL FIXED ASSET TRANSFER FORM

*******THIS FORM IS NOT TO BE USED FOR THE TRANSFER OF COMPUTER EQUIPMENT*******

To be completed for all transfers of general fixed assets between departments and returned to Auditor

To be completed by Transferring Department

***** ONLY ONE GENERAL FIXED ASSET PER FORM *****

DESCRIPTION OF ITEM (Including Manufacturer and Model Number)

Light bar

Fixed Asset County Tag Number:

16719

Serial Number:

960L 49 7F7R

Department Name:

Sheriff's Dept

Location:

1307 Uhland Road San Marcos TX

Transfer agreed to by Elected Official/Department Head:

(signature)

Date:

****

To be Completed by Department to which asset is transferred

TRANSFERRED TO
Department Name:

Constable Pct 3

Location:

Wimberley TX

Transfer accepted by Elected Official / Department Head

(signature)

Date:

To be Completed for assets to be auctioned

ASSET TO BE HELD AT WAREHOUSE ☐

Received at Warehouse By:

ASSET TO BE HELD AT PURCHASING ☐

Received at Purchasing By:

Date _____

To be completed by Purchasing Office Only

ASSET SOLD IN COUNTY AUCTION ON

_____

(Auction Date)

****

AUDITOR OFFICE USE ONLY

Fixed Asset System Updated:

Date _____

Initials _____

AUDITOR OFFICE USE ONLY

Asset Deleted from System After Auction:

Date _____

Initials _____

HAYS COUNTY AUDITOR - GENERAL FIXED ASSET TRANSFER FORM

*******THIS FORM IS NOT TO BE USED FOR THE TRANSFER OF COMPUTER EQUIPMENT*******

To be completed for all transfers of general fixed assets between departments and returned to Auditor

To be completed by Transferring Department

***** ONLY ONE GENERAL FIXED ASSET PER FORM *****

DESCRIPTION OF ITEM (Including Manufacturer and Model Number)

Mobile camera

Fixed Asset County Tag Number:

16591

Serial Number:

DV10 116438

Department Name:

Sheriff's Dept

Location:

1307 Uhland Road San Marcos TX

Transfer agreed to by Elected Official/Department Head:

(signature)

Date:

****

To be Completed by Department to which asset is transferred

TRANSFERRED TO
Department Name:

Constable Pct 3

Location:

Wimberley TX

Transfer accepted by Elected Official / Department Head

(signature)

Date:

To be Completed for assets to be auctioned

ASSET TO BE HELD AT WAREHOUSE ☐

Received at Warehouse By:

ASSET TO BE HELD AT PURCHASING ☐

Received at Purchasing By:

Date _____

To be completed by Purchasing Office Only

ASSET SOLD IN COUNTY AUCTION ON

_____

(Auction Date)

****

AUDITOR OFFICE USE ONLY

Fixed Asset System Updated:

Date _____

Initials _____

AUDITOR OFFICE USE ONLY

Asset Deleted from System After Auction:

Date _____

Initials _____

HAYS COUNTY AUDITOR - GENERAL FIXED ASSET TRANSFER FORM

*******THIS FORM IS NOT TO BE USED FOR THE TRANSFER OF COMPUTER EQUIPMENT*******

To be completed for all transfers of general fixed assets between departments and returned to Auditor

To be completed by Transferring Department

***** ONLY ONE GENERAL FIXED ASSET PER FORM *****

DESCRIPTION OF ITEM (Including Manufacturer and Model Number)

Prisoner cage

Fixed Asset County Tag Number:

16720

Serial Number:

N/A

Department Name:

Sheriff's Dept

Location:

1307 Uhland Road San Marcos TX

Transfer agreed to by Elected Official/Department Head:

(signature)

Date:

****

To be Completed by Department to which asset is transferred

TRANSFERRED TO
Department Name:

Constable Pct 3

Location:

Wimberley TX

Transfer accepted by Elected Official / Department Head

(signature)

Date:

To be Completed for assets to be auctioned

ASSET TO BE HELD AT WAREHOUSE ☐

Received at Warehouse By:

ASSET TO BE HELD AT PURCHASING ☐

Received at Purchasing By:

Date _____

To be completed by Purchasing Office Only

ASSET SOLD IN COUNTY AUCTION ON

_____

(Auction Date)

****

AUDITOR OFFICE USE ONLY

Fixed Asset System Updated:

Date _____

Initials _____

AUDITOR OFFICE USE ONLY

Asset Deleted from System After Auction:

Date _____

Initials _____

HAYS COUNTY AUDITOR - GENERAL FIXED ASSET TRANSFER FORM

*******THIS FORM IS NOT TO BE USED FOR THE TRANSFER OF COMPUTER EQUIPMENT*******

To be completed for all transfers of general fixed assets between departments and returned to Auditor

To be completed by Transferring Department

***** ONLY ONE GENERAL FIXED ASSET PER FORM *****

DESCRIPTION OF ITEM (Including Manufacturer and Model Number)

Radar

Fixed Asset County Tag Number:
16718

Serial Number:
DS 24025

Department Name:
Sheriff's Dept

Location:
1307 Uhland Road San Marcos TX

Transfer agreed to by Elected Official/Department Head:

(signature)

Date:

****

To be Completed by Department to which asset is transferred

TRANSFERRED TO
Department Name:
Constable Pct 3

Location:
Wimberley

Transfer accepted by Elected Official / Department Head

(signature)

Date:

To be Completed for assets to be auctioned

ASSET TO BE HELD AT WAREHOUSE ☐

Received at Warehouse By:

ASSET TO BE HELD AT PURCHASING ☐

Received at Purchasing By:

Date ________________

To be completed by Purchasing Office Only

ASSET SOLD IN COUNTY AUCTION ON

____

(Auction Date)

****

AUDITOR OFFICE USE ONLY

Fixed Asset System Updated:

Date ________________

Initials _______________

AUDITOR OFFICE USE ONLY

Asset Deleted from System After Auction:

Date ________________

Initials _______________

AGENDA ITEM REQUEST FORM

Hays County Commissioners Court

Tuesdays at 9:00 AM

Request forms are due in Microsoft Word Format via email by 2:00 p.m. on Wednesday.

AGENDA ITEM

Authorize the County Judge to execute an agreement with Plateau Land & Wildlife Management in the amount of $2,808.24 for annual wildlife management services contract for Dahlstrom Public Access Area.

ITEM TYPE	MEETING DATE	AMOUNT REQUIRED
CONSENT	February 21, 2017	$2,808.24

LINE ITEM NUMBER

AUDITOR USE ONLY

AUDITOR COMMENTS:

PURCHASING GUIDELINES FOLLOWED: N/A **AUDITOR REVIEW:** MARISOL VILLARREAL-ALONZO

REQUESTED BY	SPONSOR	CO-SPONSOR
Garza	JONES	N/A

SUMMARY

Annual wildlife management plan includes site monitoring visits, inspection and maintenance of nest boxes and wildlife station, spring bird survey and an annual report for CAD.

AGENDA ITEM REQUEST FORM

Hays County Commissioners Court

Tuesdays at 9:00 AM

Request forms are due in Microsoft Word Format via email by 2:00 p.m. on Wednesday.

AGENDA ITEM

Authorize Commercial OSSF Permit at 2951 FM-2001, Buda, TX 78610.

ITEM TYPE	MEETING DATE	AMOUNT REQUIRED
CONSENT	February 21, 2017	

LINE ITEM NUMBER

AUDITOR USE ONLY

AUDITOR COMMENTS:

PURCHASING GUIDELINES FOLLOWED: N/A **AUDITOR REVIEW:** N/A

REQUESTED BY	SPONSOR	CO-SPONSOR
Roxie McInnis, Development Services Manager	JONES	N/A

SUMMARY

Asifali Karowalia is proposing an OSSF to serve the new Mi Rancho Meat Market located at 2951 FM-2001. This is a 5.94 acre property that will be served by a public water supply.
The system designer, Russell Cain, R.S., has designed a treatment system which consist of pretreatment, flow equalization, and secondary treatment. After treatment, the effluent will be dispersed to a low-pressure pipe drainfield at a maximum daily rate of 1,782 gallons.

AGENDA ITEM REQUEST FORM

Hays County Commissioners Court

Tuesdays at 9:00 AM

Request forms are due in Microsoft Word Format via email by 2:00 p.m. on Wednesday.

AGENDA ITEM

Authorize the County Judge to execute a renewal of the Agreement between Hays County and Thomson Reuters related to licensure of legal research software for the District Attorney's Office and the Office of General Counsel.

ITEM TYPE	MEETING DATE	AMOUNT REQUIRED
CONSENT	February 21, 2017	TBD

LINE ITEM NUMBER

AUDITOR USE ONLY

AUDITOR COMMENTS:

PURCHASING GUIDELINES FOLLOWED: N/A **AUDITOR REVIEW:** N/A

REQUESTED BY	SPONSOR	CO-SPONSOR
KENNEDY/MAU	COBB	N/A

SUMMARY

See the attached contract, which is necessary of performance of legal research by prosecutors, investigators, legal assistants and/or General Counsel.

AGENDA ITEM REQUEST FORM

Hays County Commissioners Court

Tuesdays at 9:00 AM

Request forms are due in Microsoft Word Format via email by 2:00 p.m. on Wednesday.

AGENDA ITEM

Hold a public hearing to establish traffic regulations (3-way stop) at the intersection of Mesa Verde Drive and Estes Drive in Belterra subdivision. Discussion and possible action to follow.

ITEM TYPE	MEETING DATE	AMOUNT REQUIRED
ACTION-ROADS	February 21, 2017	

LINE ITEM NUMBER

AUDITOR USE ONLY

AUDITOR COMMENTS:

PURCHASING GUIDELINES FOLLOWED: N/A **AUDITOR REVIEW:** N/A

REQUESTED BY	SPONSOR	CO-SPONSOR
Jerry Borcherding	WHISENANT	N/A

SUMMARY

This action will be to establish two new stop sign locations on Mesa Verde Drive, one on either side of the intersection with Estes Drive, to create a 3-way stop with accompanying stop bars on the pavement. Estes Drive currently has a posted stop sign at that intersection.

AGENDA ITEM REQUEST FORM

Hays County Commissioners Court

Tuesdays at 9:00 AM

Request forms are due in Microsoft Word Format via email by 2:00 p.m. on Wednesday.

AGENDA ITEM

Discussion and possible action to consider the acceptance of the roads into the county road system for Rim Rock subd. Phase 2, Section 5, and release of maintenance bond #PRF9153419mnt-2 in the amount of $79,245.45.

ITEM TYPE	MEETING DATE	AMOUNT REQUIRED
ACTION-ROADS	February 21, 2017	

LINE ITEM NUMBER

AUDITOR USE ONLY

AUDITOR COMMENTS:

PURCHASING GUIDELINES FOLLOWED: N/A **AUDITOR REVIEW:** N/A

REQUESTED BY	SPONSOR	CO-SPONSOR
Jerry Borcherding	JONES	N/A

SUMMARY

Staff recommends acceptance of the roads into the county road system. The Transportation Department has inspected and approved the punch list repairs. Roads include: Sapling Drive (2,736 ft.).

AGENDA ITEM REQUEST FORM

Hays County Commissioners Court

Tuesdays at 9:00 AM

Request forms are due in Microsoft Word Format via email by 2:00 p.m. on Wednesday.

AGENDA ITEM

SUB-721 Medlin Creek Ranch Phase 1 (4 Lots). Discussion and possible action to approve final plat.

ITEM TYPE	MEETING DATE	AMOUNT REQUIRED
ACTION-SUBDIVISIONS	February 21, 2017	

LINE ITEM NUMBER

AUDITOR USE ONLY

AUDITOR COMMENTS:

PURCHASING GUIDELINES FOLLOWED: N/A **AUDITOR REVIEW:** N/A

REQUESTED BY	SPONSOR	CO-SPONSOR
Caitlyn Hairell	WHISENANT	N/A

SUMMARY

The proposed Medlin Creek Ranch is a proposed 4 lot subdivision located off of W Fitzhugh Road in Precinct 4.

The subdivision will be served by individual water wells and wastewater treatment will be accomplished by individual on-site sewage facilities.

STATE OF TEXAS
COUNTY OF HAYS

KNOW ALL MEN BY THESE PRESENTS: THAT I, BARTON BEND, L.P., A CORPORATION ORGANIZED AND EXISTING UNDER THE LAWS OF THE STATE OF TEXAS, WITH IT'S HOME ADDRESS AT 12400 HIGHWAY 71, STE. 350, AUSTIN, TEXAS 78738, OWNER OF 262.4 ACRES OF LAND (RECORD) OUT OF JEAN DERRIGAND SURVEY NO. 41, ABSTRACT NO 149, HAYS COUNTY, TEXAS AS CONVEYED TO IT BY DEED DATED OCTOBER 7, 2016 AND RECORDED IN DOCUMENT NO. 16034486, OFFICIAL PUBLIC RECORDS OF HAYS COUNTY, TEXAS DO HEREBY SUBDIVIDE 29.687 ACRES TO BE KNOWN AS

"MEDLIN CREEK RANCH, PHASE ONE"

IN ACCORDANCE WITH THE PLAT SHOWN HEREON, SUBJECT TO ALL EASEMENTS AND RESTRICTIONS HERETOFORE GRANTED AND DO HEREBY DEDICATE TO THE OWNERS OF THE PROPERTY THE USE OF THE STREETS AND EASEMENTS SHOWN HEREON.

IN WITNESS WHEREOF: BARTON BEND, L.P. HAS CAUSED AND ACKNOWLEDGED THESE PRESENTS TO BE EXECUTED BY IT'S EXECUTIVE OFFICER JOHN SIEMERING, THEREUNTO DULY AUTHORIZED.

JOHN SIEMERING
EXECUTIVE OFFICER
BARTON BEND, L.P.

STATE OF TEXAS
COUNTY OF HAYS

BEFORE ME, THE UNDERSIGNED AUTHORITY, ON THIS DAY PERSONALLY APPEARED JOHN SIEMERING KNOWN TO ME TO BE THE PERSON WHOSE NAME IS SUBSCRIBED TO THE FOREGOING INSTRUMENT AS EXECUTIVE OFFICER OF BARTON BEND, L.P. AND ACKNOWLEDGED TO ME THAT HE EXECUTED THE SAME IN SUCH CAPACITY AS THE ACT AND DEED OF SAID CORPORATION AND ACKNOWLEDGED THE SAME FOR THE PURPOSES AND CONSIDERATIONS THEREIN STATED.

NOTARY PUBLIC IN AND FOR _____ COUNTY, TEXAS
COMMISSION EXPIRES _____
PRINT NAME _____

WATER/ WASTEWATER NOTE:

NO STRUCTURE IN THIS SUBDIVISION SHALL BE OCCUPIED UNTIL CONNECTED TO AN INDIVIDUAL WATER SUPPLY OR A STATE APPROVED COMMUNITY WATER SYSTEM, DUE TO DECLINING WATER SUPPLIES AND WATER QUALITY, PROSPECTIVE PROPERTY OWNERS ARE CAUTIONED BY THE COUNTY TO QUESTION THE SELLER CONCERNING GROUND WATER AVAILABILITY, RAIN WATER COLLECTION IS ENCOURAGED AND IN SOME AREAS MAY OFFER THE BEST RENEWABLE WATER SOURCE.
NO STRUCTURE IN THIS SUBDIVISION SHALL BE OCCUPIED UNTIL CONNECTED TO A PUBLIC SEWER SYSTEM OR TO AN ON SITE WASTEWATER SYSTEM WHICH HAS BEEN APPROVED AND PERMITTED BY HAYS COUNTY DEVELOPMENT SERVICES.

NO CONSTRUCTION OR OTHER DEVELOPMENT WITHIN THIS SUBDIVISION MAY BEGIN UNTIL ALL HAYS COUNTY DEVELOPMENT PERMIT REQUIREMENTS HAVE BEEN MET.

" UNDER DEPARTMENT REGULATIONS, THIS SUBDIVISION IS EXEMPT FROM THE REQUIREMENTS TO DEMONSTRATE THE AVAILABILITY OF WATER AND WASTEWATER SERVICE. FURTHER SUBDIVIDING IS PROHIBITED FOR A DURATION OF 5 YEARS FOLLOWING THE RECORDING OF THIS PLAT"

JAMES "CLINT" GARZA
DIRECTOR OF HAYS COUNTY
DEVELOPMENT AND COMMUNITY SERVICES

TOM POPE, R.S. C.F.M.
HAYS COUNTY FLOODPLAIN ADMINISTRATOR

STATE OF TEXAS
COUNTY OF HAYS

I, LIZ GONZALEZ, COUNTY CLERK OF HAYS COUNTY, TEXAS, DO HEREBY CERTIFY THAT ON THE _____ DAY OF _____, A.D. 2017, THE COMMISSIONERS COURT OF HAYS COUNTY, TEXAS PASSED AN ORDER AUTHORIZING THE FILING FOR RECORD OF THIS PLAT, AND SAID ORDER HAS BEEN ENTERED IN THE MINUTES OF SAID COURT IN DOCUMENT NO. _____ , OFFICIAL PUBLIC RECORDS OF HAYS COUNTY, TEXAS.

WITNESS MY HAND AND SEAL OF OFFICE, THIS THE _____ DAY OF _____ A.D. 2017.

BERT COBB, M.D.
COUNTY JUDGE
HAYS COUNTY, TEXAS

LIZ GONZALEZ
COUNTY CLERK
HAYS COUNTY, TEXAS

STATE OF TEXAS
COUNTY OF HAYS

I, LIZ GONZALEZ, COUNTY CLERK OF HAYS COUNTY, TEXAS, DO HEREBY CERTIFY THAT THE FOREGOING INSTRUMENT IN WRITING WITH ITS CERTIFICATE OF AUTHENTICATION WAS FILED FOR RECORD IN MY OFFICE ON THE _____ DAY OF _____ A.D., 2017 AT _____ O'CLOCK __.M. IN THE PLAT RECORDS OF HAYS COUNTY, TEXAS IN DOCUMENT NO. _____
WITNESS MY HAND AND SEAL OF OFFICE, THIS THE _____ DAY OF _____ A.D., 2017.

LIZ GONZALEZ
COUNTY CLERK
HAYS COUNTY, TEXAS

STATE OF TEXAS
COUNTY OF HAYS

KNOW ALL MEN BY THESE PRESENTS, THAT I, THE UNDERSIGNED, A REGISTERED PROFESSIONAL LAND SURVEYOR IN THE STATE OF TEXAS, HEREBY CERTIFY THAT THIS PLAT COMPLIES WITH THE SURVEY RELATED REQUIREMENTS OF THE HAYS COUNTY DEVELOPMENT REGULATIONS AND THAT AN ACTUAL SURVEY OF THE PROPERTY WAS MADE UNDER MY SUPERVISION ON THE GROUND AND THAT THE CORNER MONUMENTS WERE PROPERLY PLACED UNDER MY SUPERVISION.

PRELIMINARY REVIEW COPY– NOT FOR RECORDATION

SOUTHWEST LAND CONSULTANTS
GARY F. PENNINGTON, R.P.L.S.
REGISTERED PROFESSIONAL LAND SURVEYOR
NO. 4404 – STATE OF TEXAS
P.O. BOX 1244
DRIPPING SPRINGS, TEXAS 78620
(512) 888–4460 FIRM NO. 10194161

DATE

IN APPROVING THIS PLAT BY THE COMMISSIONERS COURT OF HAYS COUNTY, TEXAS, IT IS UNDERSTOOD THAT THE BUILDING OF ALL STREETS, ROADS, AND OTHER PUBLIC THOROUGHFARES DELINEATED AND SHOWN ON THIS PLAT, AND ALL BRIDGES AND CULVERTS NECESSARY TO BE CONSTRUCTED OR PLACED IN SUCH STREETS, ROADS, OR OTHER PUBLIC THOROUGHFARES, OR IN CONNECTION THEREWITH SHALL BE THE RESPONSIBILITY OF THE OWNER AND/OR THE DEVELOPER OF THE TRACT OF LAND COVERED BY THIS PLAT IN ACCORDANCE WITH THE PLANS AND SPECIFICATIONS PRESCRIBED BY THE COMMISSIONERS COURT OF HAYS COUNTY, TEXAS . HAYS COUNTY ASSUMES NO OBLIGATION TO BUILD THE STREETS, ROADS, OR OTHER PUBLIC THOROUGHFARES SHOWN ON THIS PLAT OR OF THE CONSTRUCTION OF ANY BRIDGES OR CULVERTS IN CONNECTION THEREWITH.

MEDLIN CREEK RANCH, PHASE ONE

A SUBDIVISION IN HAYS COUNTY, TEXAS

PRELIMINARY REVIEW COPY

JANUARY 2017
SCALE 1" = 150'

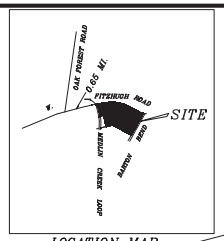

LOCATION MAP
NOT TO SCALE

JON R. HORNADAY AND RHODA A. HORNADAY
VOL. 1009, PG. 14
(122.481 ACRES)
2026 W. FITZHUGH ROAD
DRIPPING SPRINGS, TEXAS 78620

LEGEND

< >	RECORD INFORMATION
●	1/2" IRON ROD FOUND (UNLESS NOTED)
○	1/2 INCH IRON ROD WITH CAP SET
⊠	KC ENGINEERING BRASS CAP FOUND
⊙	CALCULATED POINT
[ ]	RECORD INFORMATION DOC. 16034486

LINE	BEARING	DISTANCE
L1	N 80°49'09" E	137.40'
[REC]	N 80°48'56" E	137.40'
L2	S 76°31'54" W	137.26'
L3	N 29°02'42" E	58.42'
[REC]	N 29°02'05" E	58.46'
L4	S 13°09'50" E	12.21'
L5	N 13°12'00" W	10.25'

0.055 ACRES [0.061 ACRES] TO BE DEDICATED TO HAYS COUNTY (SEE DETAIL "A")

FITZHUGH ROAD W. (60' R.O.W.)

N 80°49'09" E 312.33'
[N 80°48'56" E 312.37']

20' STRIP RESERVED TO HAYS COUNTY FOR ROAD WIDENING PURPOSES 0.833 ACRES

HENERY H. BROOKS, JR.
VOL. 844, PG. 186
(10.00 AC.)
P.O. BOX 118
DRIPPING SPRINGS, TEXAS 78620

CATHERINE GREER 185/233 (2.00 Ac.)
NO ADDRESS FOUND IN PUBLIC RECORDS

MICHELLE ANN MORELAND
VOL. 831, PG. 164
(12.0 AC.)
P.O. BOX 764, DRIPPING SPRINGS, TEXAS 78620

(HAYS COUNTY ROAD NO. 101)

[S 61°18'15" E 443.98']
S 61°15'54" E 443.99'

MEDLIN CREEK LOOP (60' R.O.W. AND 4 AND 37)

(S 13°13'01" E 452.15')
S 12°15'55" E 452.15'
(S 13°31'01" E 456.84')
S 12°15'55" E 456.90')

BARTON BEND, L.P.
DOC. NO. 16034486, O.P.R.H.C.T.
(262.4 AC. REMAINDER TRACT)
12400 HIGHWAY 71, STE 350
AUSTIN, TEXAS, 78738

LOT 17
6.986 Acres

ABSTRACT NO. 149
SURVEY NO. 41.

N 03°45'00" W 872.06'

LOT 16
7.216 Acres

LOT 15
7.751 Acres

S 29°02'08" W 396.54'
N 29°02'08" E 845.27'
N 29°02'08" E 446.73'

N 60°57'35" W 735.32'

N 29°02'58" E 486.67'
941.51']
60'

UN-NUMBERED ROAD BY PRESCRIPTIVE RIGHTS)
BEND

JAMES C. HAWLEY, JR., RICK JORDAN AND DARREL STYLES, TRUSTEES OF AVICULTURAL PRESERVATION CENTER TRUST
VOL. 1225, PG. 398
(16.47 AC.) REMAINDER TRACT

JEAN
DERRIGAND

(N 77°30'47" E)
N 76°30'10" E
(12.36')
(112.18')

MEDLIN CREEK PHASE ONE
BOOK 4, PAGE 37
LOT 61
MACHELLE DIAMOND AND AMY ALAMO
215 MEDLIN CREEK LOOP
DRIPPING SPRINGS, TEXAS 78620
(1.604 AC.)

(S 13°27'40" E 440.00')
S 12°26'57" E 439.99'

MEDLIN CREEK PHASE ONE
BOOK 4, PAGE 37
LOT 7
DAVID DIAMOND AND AMY ALAMO
205 MEDLIN CREEK LOOP
DRIPPING SPRINGS, TEXAS 78620
(1.604 AC.)

S 76°32'52" W
S 77°30'47" W
(S 77°30'47" W)
(177.18')

(S 12°29'13" E 440.04')
S 12°26'56" E 440.01'

342.36]
[S 76°32'36" W
S 76°31'54" W
204.99'
552.31')

LOT 62
MEDLIN CREEK, PHASE ONE
BOOK 4, PAGE 37
JILL RILEY POWELL
DAVID POWELL
(2.304 AC.)
301 MEDLIN CREEK LOOP
DRIPPING SPRINGS, TEXAS 78620

(S 77°30'47" W

LOT 14
7.679 Acres

[S 60°57'23" E 735.14']
S 60°57'35" E 735.22'

LOT 1
RAISCH SUBDIVISION
BOOK 19, PAGES 92-93
CHRIS HIEBER AND JULIE ROXBURG (3.999 ACRES)
NO ADDRESS FOUND IN PUBLIC RECORDS

[N 29°02'53" E
454.96'
N 29°02'58" E

BARTON
(60' COUNTY MAINTAINED

RICK JORDAN AND MARK MOORE
VOL. 3936, PAGE 722
(1.957 AC.)

ORIGINAL CONFIGURATION
NOT TO SCALE

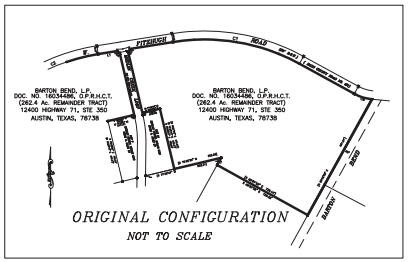

0.055 ACRES SURVEYED [0.061 ACRES RECORD]
TO BE DEDICATED TO HAYS COUNTY
FOR ROAD PURPOSES

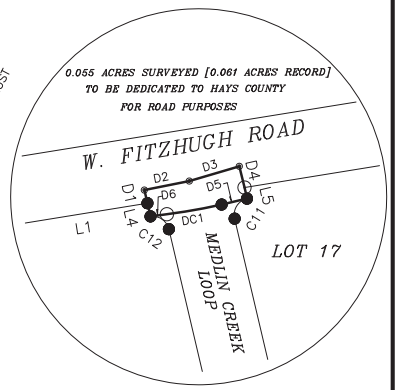

ROAD DEDICATION DETAIL "A"

LINE	BEARING	DISTANCE
D1	N 13°09'50" W	12.21'
D2	N 78°48'01" E	41.33'
D3	N 73°34'39" E	47.24'
D4	S 13°12'00" E	19.64'
D5	S 76°51'07" W	23.60'
D6	S 82°21'35" W	14.90'

CURVE	ARC LENGTH	RADIUS	DELTA ANGLE	CHORD BEARING	CHORD LENGTH
DC1	50.16'	499.72'	5°45'05"	N 79°59'42" E	50.14'

PLATTED CONFIGURATION

GENERAL NOTES

1) ACCORDING TO THE NATIONAL FLOOD INSURANCE RATE MAP COMMUNITY PANEL NO.48209C0050F, DATED SEPT. 02, 2005, THIS PROPERTY IS LOCATED IN ZONE "X", AND IS NOT IN THE 100 YEAR FLOODPLAIN.

2) NO PORTION OF THIS SUBDIVISION LIES WITHIN THE EDWARDS AQUIFER RECHARGE ZONE. THIS SUBDIVISION DOES LIE WITHIN THE BOUNDARIES OF THE CONTRIBUTING ZONE OF THE EDWARDS AQUIFER.

3) THIS SUBDIVISION IS SUBJECT TO ALL EXISTING EASEMENTS AND MATTERS OF RECORD AFFECTING THESE LOTS THAT ARE NOT REFLECTED ON THIS PLAT.

4) THIS PROPERTY WILL BE SERVED BY INDIVIDUAL ON-SITE SEWAGE FACILITIES.

5) MINIMUM CULVERT SIZE FOR DRIVEWAYS WITHIN THIS SUBDIVISION, IF REQUIRED, SHALL BE 18" C.M.P OR AS DIRECTED BY THE HAYS COUNTY. TRANSPORTATION DEPARTMENT.

6) THIS PROPERTY IS NOT LOCATED WITHIN THE EXTRA-TERRITORIAL JURISDICTION OF ANY CITY OR MUNICIPALITY.

7) THE FOLLOWING PUBLIC UTILITY EASEMENTS ARE HEREBY DEDICATED:
10' P.U.E. ALONG EACH SIDE OF INTERIOR LOT LINES
10' P.U.E. ALONG ALL OTHER PERIMETER LINES OF SUBDIVISION
20' P.E.C. EASEMENT CENTERED ALONG ALL EXISTING UTILITY LINES AND GUYING ANCHORS.
20' P.U.E. ALONG MEDLIN CREEK LOOP, W. FITZHUGH ROAD AND BARTON BEND

8) THIS PROPERTY IS LOCATED WITHIN THE DRIPPING SPRINGS INDEPENDENT SCHOOL DISTRICT.

9) THIS PROPERTY IS LOCATED WITHIN THE NORTH HAYS COUNTY ES DISTRICT #1 AND THE HAYS COUNTY ES DISTRICT #6.

10) BEARING BASIS IS N.A.D. 83, SOUTH CENTRAL ZONE (4202)

11) ACCESS TO LOT 17 WILL BE RESTRICTED TO MEDLIN CREEK LOOP AND ACCESS TO LOT 15 WILL BE RESTRICTED TO BARTON BEND ROAD. LOT 16 WILL BE A SINGLE-FAMILY RESIDENCE DRIVEWAY OFF FITZHUGH ROAD AND LOT 14 WILL BE A SINGLE FAMILY RESIDENCE DRIVEWAY OFF BARTON BEND ROAD.

TOTAL NO. OF LOTS	4
TOTAL ACREAGE OF LOTS WITH ROAD DEDICATION	29.687 ACRES
TOTAL ACREAGE OF LOTS	29.632 ACRES
AVERAGE LOT ACREAGE	7.408 ACRES
NO. OF LOTS LARGER THAN 1 AC. AND SMALLER THAN 2 AC.	0
NO. OF LOTS LARGER THAN 2 AC. AND SMALLER THAN 5 AC.	0
NO. OF LOTS LARGER THAN 5 AC. AND SMALLER THAN 10 AC.	4
NO. OF LOTS LARGER THAN 10 AC.	0
ELECTRICITY SERVICE	PEDERNALES ELECTRIC COOPERATIVE, INC.
TELEPHONE SERVICE	FRONTIER COMMUNICATIONS.
WATER	INDIVIDUAL WATER WELLS
WASTEWATER	INDIVIDUAL ON-SITE SEWAGE FACILITIES
OWNER AND DEVELOPER	BARTON BEND, L.P. AGENT-JOHN SIEMERING, EXECUTIVE OFFICER 12400 HIGHWAY 71, STE. 350 AUSTIN, TEXAS 78738
SURVEYOR	SOUTHWEST LAND CONSULTANTS GARY F. PENNINGTON, R.P.L.S. R.P.L.S. NO. 4404 - STATE OF TEXAS P.O. BOX 1244 DRIPPING SPRINGS, TEXAS 78620 (512) 888-4460

CURVE	ARC LENGTH	RADIUS	DELTA ANGLE	CHORD BEARING	CHORD LENGTH
C1	928.02'	1402.39'	37°54'54"	N 80°13'40" W	911.18'
[REC]	928.13'	1402.39'	37°55'10"		911.28'
C2	603.13'	1402.40'	24°38'28"	S 68°30'48" W	598.49'
C5	152.09'	1402.39'	6°12'50"	S 83°55'18" W	152.02'
C6	613.10'	1402.39'	25°02'56"	N 80°26'49" W	608.23'
C7	162.82'	1402.39'	6°39'08"	N 64°35'47" W	162.73'
C8	132.74'	330.00'	23°02'51"	S 72°45'10" E	131.85'
[REC]	132.73'	330.00'	23°02'44"	S 72°47'24" E	131.84'
C9	23.42'	15.00'	89°28'06"	S 31°43'42" W	21.11'
REC	23.50'	15.00'	89°45'42"	S 32°37'56" W	21.17'
C10	23.54'	15.00'	89°55'43"	N 58°10'38" W	21.20'
REC	23.62'	15.00'	90°14'18"	N 57°22'04" W	21.26'
C11	23.68'	15.00'	90°27'40"	S 31°52'42" W	21.30'
REC	23.61'	15.00'	90°12'02"	S 32°51'06" W	21.25'
C12	22.15'	15.00'	84°35'53"	N 55°09'17" W	20.19'
REC	22.01'	15.00'	84°35'53"	N 54°17'03" W	20.09'

MEDLIN CREEK RANCH, PHASE ONE

A SUBDIVISION IN HAYS COUNTY, TEXAS

PRELIMINARY REVIEW COPY

AGENDA ITEM REQUEST FORM

Hays County Commissioners Court

Tuesdays at 9:00 AM

Request forms are due in Microsoft Word Format via email by 2:00 p.m. on Wednesday.

AGENDA ITEM

Discussion and possible action to authorize the County Judge to execute an Installation Contract with Performance Services Inc. related to The Energy Efficiency Project and the technical energy audit performed in 2016.

ITEM TYPE	MEETING DATE	AMOUNT REQUIRED
ACTION-MISCELLANEOUS	February 21, 2017	

LINE ITEM NUMBER

TBD

AUDITOR USE ONLY

AUDITOR COMMENTS:

PURCHASING GUIDELINES FOLLOWED: N/A **AUDITOR REVIEW:** N/A

REQUESTED BY	SPONSOR	CO-SPONSOR
Garza	CONLEY	N/A

SUMMARY

On July 19, 2016, Commissioners Court passed a memorandum of understanding authorizing Performance Services Incorporated to perform a technical energy audit and report back to Hays County. The audit was completed over the summer and fall. In November, 2016, the court approved a resolution pertaining to financing of the project. Staff and PSI have identified possible funding sources and are ready to move forward and begin the project.

INSTALLATION CONTRACT

Contract No.: _____

This INSTALLATION CONTRACT (the "Contract") is made as of the _____ day of _____ 20__, by and between ***Performance Services of Texas, Inc.*** *("PSI") and Hays County("Owner"), concerning the following:*

Owner: *Hays County*
712 s. Stagecoach Trail
San Marcos, Texas 78666

Qualified Provider/ Contractor: *Performance Services of Texas, Inc.*
3010 LJB Freeway, Suite 1200
Dallas, TX 75234

Project: ENERGY SAVINGS PERFORMANCE CONTRACT

Scope of Work: PSI proposes to provide Utility Cost Reduction Measures ("UCRMs") for Owner at the Project, as described in the Utility Assessment Report dated _____, and attached hereto as **Exhibit A** (the "UAR"), and as further described in the Improvement List, dated _____, and attached hereto as **Exhibit B** (the "Improvement List").

PSI shall cause the UCRMs to be installed in accordance with the UAR, the Improvement List and the Measurement and Verification Plan, attached hereto as **Exhibit C** (the "M&V Plan"). PSI has guaranteed the savings due to the installation of the UCRMs as set forth in the UAR and the Performance Guarantee Agreement, attached hereto as **Exhibit D** (the "Guarantee").

Contract Price: _____ Dollars ($_____)

Terms of Payment: Monthly progress based payments, pursuant to the terms of Paragraph 4 below.

Exhibits:
"A": Utility Assessment Report ("UAR")
"B": Improvement List
"C": Measurement and Verification Plan ("M&V Plan")
"D": Performance Guarantee Agreement ("Guarantee")
"E": Sample Periodic Savings Report

PSI and Owner agree to the terms above and as set forth below in the following Terms and Conditions and in the Exhibits attached hereto, all of which are a material part of this Contract. The Contract, with its attachments and exhibits, is the full agreement between PSI and the Owner as of the date it is signed. All previous conversations, correspondence, agreements, or representations not included in the Contract are not part of the Contract between PSI and the Owner. This Contract shall become effective on the date first above written notwithstanding different dates of execution hereof.

OWNER:	**QUALIFIED PROVIDER/CONTRACTOR:**
HAYS COUNTY	**PERFORMANCE SERVICES, INC.**

By:_____ By: _____
Signature Signature

_____ _____
Printed Name and Title Printed Name and Title

TERMS AND CONDITIONS

1. **SCOPE OF WORK.** PSI shall provide Owner with the work and the services set forth in the Scope of Work above ("Work"), except to the extent specifically indicated in the Contract Documents to be the responsibility of others. PSI shall supervise and direct the Work and shall be solely responsible for all construction means, methods, techniques, sequences, and procedures and for coordinating all portions of the Work. PSI shall be responsible to pay for all labor, materials, equipment, tools, construction equipment and machinery, transportation, and other facilities and services necessary for the proper execution and completion of the Work and Services, whether temporary or permanent and whether or not incorporated or to be incorporated in the Work. Owner and PSI will mutually agree upon any required field utilities or other work, equipment or services to be provided by the Owner. In resolving conflicts, errors, discrepancies and disputes concerning the Scope of Work to be performed by PSI, PSI's Improvement List and PSI's plan, plan notes and scope documents generated therefrom, shall be given precedence over all other documents. The Work and the UCRMs shall comply with current local, state and federal construction, plumbing and environmental codes and regulations.

2. **CONTRACT DOCUMENTS.** The Contract Documents are comprised of the following: (1) this Contract; (2) All written modifications, addenda, amendments, scope modifications or additions to this Contract; (3) the UAR; (4) the Improvement List; (5) the Measurement and Verification Plan; and (6) the Performance Guarantee.

3. **MUTUAL OBLIGATIONS.** Owner and PSI commit at all times to cooperate fully with each other and proceed on the basis of trust and good faith, to realize the benefits afforded under the Contract Documents. Owner shall, throughout the performance of the Work, cooperate with PSI and perform its responsibilities, obligations and services in a timely manner to facilitate PSI's timely and efficient performance of the Work and so as not to delay or interfere with PSI's performance of its obligations under this Contract.

4. **CONTRACT PRICE AND PAYMENT**. The total price for PSI's Work under this Contract shall be as set forth above, subject to adjustments as set forth herein (the "Contract Price"). All payments made by Owner to PSI shall be made via wire transfer. Within ten (10) days of execution of the Contract, Owner shall pay to PSI the agreed cost for the UAR, five percent (5%) of the Contract Price as a mobilization fee and one hundred percent (100%) of the engineering for the Project, as specified in the UAR. Thereafter, the balance of the Contract Price shall be paid to PSI in monthly progress payments on or before the 28th of each month for the value of work completed plus the amount of materials and equipment suitably stored, either on site or off-site the previous month, less the aggregate of previous payments to PSI. Sales of materials are payable in cash on delivery of the goods. There shall be no retainage withheld from payments made under this Contract. Final payment, constituting the entire unpaid balance for the Work, shall be due 30 days after the Work described in this Contract is substantially complete, except for 150% of the value of any agreed upon punch list items remaining at that time. "Substantial Completion" is defined as the stage in the progress of the Work when the Work is sufficiently complete in accordance with the Contract Documents so that the Owner can occupy or utilize the Work for its intended use. Any amounts withheld for punch list shall be due 30 days after the punch list items are completed. Any performance guarantee, as set forth in the Performance Guarantee, shall not commence or become effective until such final payment is received by PSI. No back charges or claim of Owner for services shall be valid except by the agreement in writing by PSI before work is executed. In the event that the Owner fails to make any monthly progress payment or is otherwise overdue in making such payment, and upon fourteen (14) days written notice to the Owner, PSI shall be entitled to stop work without prejudice to any other remedy it may have, and Owner shall be responsible to PSI for any increased costs in demobilization and remobilization in stopping and re-commencing the Work. In the event of such work stoppage and start up, PSI and Owner agree to cooperate in

adjusting any schedule requirements so as to endeavor to minimize the impact on the Owner's operations of its facility. All sums not paid when due shall bear interest at the rate of 1½% per month from due date until paid or the maximum legal rate permitted by law whichever is less; and PSI is entitled to recover all costs of collection, including PSI's attorney fees, from the Owner.

5. **ACCESS TO JOB-SITE.** Owner and PSI shall mutually agree upon the access to the jobsite necessary to perform the Work, as well as any preparation of work areas so as to be acceptable for PSI's Work under this Contract. PSI and Owner will cooperate with each other to coordinate such access and preparation of the work areas. PSI will not be called upon to start work until the mutually agreed upon access to the jobsite is provided and until sufficient areas are ready to ensure continued work until job completion. The performance of PSI's Work is contingent upon such agreed access to the job site and to the areas whereby PSI is to perform its work.

6. **SCHEDULE**. After execution of this Contract, PSI shall be given a reasonable time in which to commence and complete the performance of the Work under this Contract ("Contract Time"). PSI shall not be liable or responsible for any loss, damage, costs, delay, default, or injury that is caused by acts, omissions, conditions, events or circumstances beyond its control or due to no fault of PSI or those for whom PSI is responsible, or due to any act, omission or neglect of the Owner or anyone under the Owner's control, including but not limited to: delays, hindrances or interferences caused by Owner, architect and/or engineers, or other contractors, subcontractors, suppliers or third parties; Concealed or Unknown Subsurface Conditions, Hazardous Conditions, changes ordered in the Work, armed conflict or economic dislocation resulting therefrom; embargos, shortages of labor, equipment or materials, production facilities or transportation; labor difficulties or disputes, civil disorders of any kind; action of civil or military authorities; vendor priorities and allocations, fires, floods, accidents, unusual or unanticipated weather conditions or precipitation and acts of God. IN NO EVENT SHALL PSI BE LIABLE FOR BUSINESS INTERRUPTION LOSSES OR CONSEQUENTIAL OR SPECULATIVE DAMAGES.

7. **WARRANTY.** PSI warrants that materials and equipment furnished by PSI will be of good quality and new; that the Work will be free from defects, and to the extent consistent with the standard of reasonable care and skill ordinarily used and exercised by contractors such as PSI in performing work for projects of the same type, kind, nature, complexity and size as the Project covered by this Contract, and as otherwise not inherent in the quality required or permitted; and that the Work will conform to the requirements of this Contract. PSI warrants that the Work shall be free from defects in material and workmanship arising from normal usage for a period of one (1) year from the date of Substantial Completion ("Warranty Period"). THIS WARRANTY IS IN LIEU OF ALL OTHER WARRANTIES EXPRESS OR IMPLIED, INCLUDING ANY WARRANTIES OF MERCHANTABILITY OR FITNESS FOR A PARTICULAR PURPOSE. During the Warranty Period, upon fourteen days (14) written notice from the Owner, PSI shall, at its option, repair or replace the defective Work. PSI's warranty obligations shall lapse after the running of the Warranty Period. These warranties do not extend to any Work that has been repaired by others, abused, altered, misused, or that has not been properly and reasonably maintained. PSI shall not be responsible for damage to its work caused by others. Any repair work necessitated by such damage caused by others will be considered as an order for extra work. PSI will not be responsible for special, incidental, or consequential damages.

   Nothing in the warranties provided herein are intended to limit any manufacturer's warranty which provides Owner with greater warranty rights than set forth in this Section. Upon expiration of the Warranty Period, PSI will assign the rights to any manufacturer's warranty and all other rights against manufacturers of materials and equipment and Owner accepts such assignment for all materials and equipment incorporated into the Work. The Owner agrees that after expiration of the Warranty Period, its sole remedy for defects or failure of materials or equipment is directly against such manufacturers and waives all rights against PSI for any defects or failures of such materials or equipment following Substantial Completion. PSI will provide the Owner with all manufacturers' warranties upon expiration of the Warranty Period. However, PSI's failure to do so does not waive or modify this provision.

8. **CONCEALED OR UNKNOWN CONDITIONS.** Should concealed or unknown subsurface conditions be encountered in an existing structure during the performance of PSI's Work that are of an unusual nature, differing materially from those ordinarily encountered and not generally recognized as inherent in work of the character

provided for in this Contract, the Contract Price shall be equitably adjusted upon claim by the PSI for any increased costs.

9. **OWNER SCOPE MODIFICATIONS**. PSI agrees not to seek any change orders for additional costs incurred in performing the Work pursuant to the Scope of Work set forth above. However, in the event that the Owner modifies the Scope of Work and directs PSI to perform any additional or extra work outside the Scope of Work as set forth above, the Contract Price and Contract Time shall be adjusted accordingly. PSI shall not be obligated to perform scope modifications, including additional or extra work, unless PSI shall receive a written directive, signed by an authorized representative of Owner; provided, that work performed without the written directive of Owner, but made necessary by an emergency involving an immediate threat to the safety of persons or property, or the non-performance of which would impair the efficiency, scheduling or coordination of the work of Owner, PSI or PSI's subcontractors, shall nevertheless serve as a basis for revising the Contract Price or Contract Time in accordance with this paragraph. The amount to be paid by Owner to PSI for any scope modifications, including additional or extra work, or the amount to be allowed by PSI, shall be determined as provided under the terms of the Contract, except, notwithstanding any provisions to the contrary in the Contract or elsewhere in the Contract Documents, PSI shall be entitled to an allowance of ___ percent (___%) for overhead and an allowance of ___ percent (___%) for profit, in addition to its actual costs for materials and labor on all scope modifications, including additional or extra work.

10. **MATERIALS.** All materials shall be furnished in accordance with the respective industry tolerance of color variation, thickness, size, finish, texture and performance standards.

11. **TAXES, PERMITS, AND FEES**. PSI shall be responsible for obtaining all permits and related permit fees associated with the Work. PSI shall pay sales, consumer, use, and other similar taxes and shall secure and pay for the building permit and other permits and governmental fees, licenses, and inspections necessary for proper execution. The Owner shall be responsible for securing any necessary approvals, easements, assessments, or zoning changes and shall be responsible for real estate and personal property taxes where applicable.

12. **OWNER PROJECT CRITERIA.** In the event that Owner furnishes any criteria or design requirements, such as conceptual documents, design criteria, performance requirements and other Project-specific technical materials and requirements for the Project which may describe the Owner's program requirements and objectives for the Project, including but not limited to the character, scope, use, space, price, time and scheduling requirements, relationships, forms, size and appearance of the Project, site and expandability requirements, materials and systems and, in general, their quality levels, performance standards, requirements or criteria, and major equipment layouts, submittal requirements and other requirements governing PSI's Work (defined herein collectively as "Owner Project Criteria"), then PSI shall have the right to rely on the information contained in the Owner's Project Criteria in performance of the Work, including the preparation of any drawings, plans and specifications.

13. **OWNER SERVICES AND INFORMATION.** Owner shall provide, at its own cost and expense, for PSI's information and use the following, all of which PSI is entitled to rely upon in performing the Work: (1) Surveys describing the property, boundaries, topography and reference points for use during construction, including existing service and utility lines; (2) Geotechnical studies describing subsurface conditions, and other surveys describing other latent or concealed physical conditions at the Site; (3) Temporary and permanent easements, zoning and other requirements and encumbrances affecting land use, or necessary to permit the proper construction of the Project and enable PSI to perform the Work; (4) A legal description of the site; (5) To the extent available, as-built and record drawings of any existing structures at the Site; 6) To the extent available, environmental studies, reports and impact statements describing the structural and mechanical systems, chemical, air and water pollution and environmental conditions, including Hazardous Conditions, in existence at the Site; and (7) any other mutually agreed upon services and information.

14. **OWNER REPRESENTATIONS.** Owner represents, warrants and agrees that (i) it has obtained any consents, approvals, permissions and easements necessary for the work, excluding state and local permits and design releases being furnished by PSI pursuant to Paragraph 11, and has furnished all bonds or financial security called for by governmental authorities; (ii) job and site conditions are such that the work is ready to be started in normal

course; (iii) there are no concealed or unknown subsurface conditions in the existing structure and there are no unusual soil or subsurface conditions at the site and the area where the work is to be installed consists of undisturbed virgin soil; (iv) if the work is dependent upon or is to be undertaken in conjunction with other work, such other work shall be performed so as to permit PSI to perform the work without unusual or extraordinary effort or cost and in a normal uninterrupted single shift operation; (v) it is the owner of the site; and, (vi) all tap in, connection and other types of fees and charges have been fully paid.

15. **FINANCIAL ASSURANCES.** If requested by PSI, Owner shall furnish reasonable evidence satisfactory to PSI, prior to signing this Contract, or any time thereafter, that sufficient funds are available and committed for the entire cost of the Project, including payment in full of the Contract Price. If PSI elects to proceed with work without having received such evidence, it may stop work upon ten days notice if such evidence has not been furnished within five days after such request.

16. **LIQUIDATED DAMAGES.** Owner shall make no demand for liquidated damages for delays or actual damages for delays in any sum in excess of such amount as may be specifically named in this Contract and no liquidated damages may be assessed against PSI for delays or causes attributed to other PSIs or arising outside the scope of this Contract.

17. **CLEANUP**. PSI shall keep the premises and the surrounding area free from accumulation of waste materials or rubbish caused by the Work and, upon completion of the Work, PSI shall remove all waste materials, rubbish, tools, construction equipment, machinery, and surplus materials. PSI agrees at all times to keep the job site clean of debris arising out of its own operations, and Owner shall in no event back charge PSI for the Owner's cleanup costs without PSI's written consent.

18. **SAFETY**. PSI shall comply with all applicable laws, ordinances, rules, regulations, and lawful orders of public authorities related to safety of persons or property. PSI's responsibility for safety under this Section is not intended in any way to relieve any of PSI's subcontractors, suppliers or second or third tier subcontractors and suppliers of their own legal obligations and responsibility for complying with any applicable laws, ordinances, rules, regulations, and lawful orders of public authorities related to safety of persons or property, and for taking all necessary measures to implement and monitor reasonable safety precautions and programs to guard against injury, losses, damages or accidents resulting from their performance of the Work.

19. **HAZARDOUS MATERIALS**. Unless specifically noted in the Contract, PSI is not responsible for any Hazardous Conditions, Materials or Substances encountered on site. Unless specifically noted in the Contract, PSI's obligations expressly exclude any Work of any nature associated or connected with the identification, abatement, cleanup, control, removal, or disposal of Hazardous Conditions, Materials or Substances, including but not limited to asbestos in or on the premises. Upon encountering any Hazardous Conditions, Materials or Substances, PSI will stop work until the Owner takes the necessary measures necessary to ensure that the Hazardous Conditions, Materials or Substances have been remediated or rendered harmless. Such measures and remediation are the responsibility of the Owner, not PSI.

20. **PSI INSURANCE**. Prior to commencing the Work, PSI shall provide a certificate of insurance to the Owner showing its insurance coverage, and PSI shall maintain such insurance in full force and effect at all times until the Work has been completed, in the following minimum amounts:

COVERAGES	LIMITS OF LIABILITY
Commercial General Liability	
> General Aggregate	$ 2,000,000
> Product & Completed Operations Aggregate	$ 2,000,000
> Personal & Advertising Injury	$ 1,000,000
> Each Occurrence	$ 1,000,000
> Automobile Liability- Each Occurrence	$ 1,000,000
> Workers Compensation	$500,000/$500,000/$500,000
> Umbrella Policy in addition to individual coverage	$10,000,000.

The Owner and its consultants shall be additional insureds on the Contractor's primary and excess insurance policies for Commercial General Liability and Automobile Liability. The additional insured coverage shall be primary and non-contributory as to any of the Owner's insurance policies. The additional insured coverage shall apply to both ongoing operations and completed operations. The policy limits applicable to the additional insureds shall be the same amount applicable to the named insured or policy limits not more than the amounts required under this Contract.

The insurance carriers shall have no right of subrogation against Owner and its consultants and their respective officers, directors, consultants, agents, and employees, and Contractor shall obtain from each of its subcontractors a waiver of subrogation on all insurance coverages required, including Commercial General Liability, Workers Compensation, Employers Liability and Automobile Liability, in favor of the parties identified herein with respect to losses arising out of or in connection with the Work on the Project.

21. **OWNER'S INSURANCE**. The Owner shall assume full responsibility for any risk of loss to the Work. The Owner shall also procure and maintain property insurance upon the entire Project and premises, including Builder's Risk coverage, in an amount equal to the total value of the entire Project and premises, including the Work, on all real and personal property, including professional fees, overtime premiums and all other expenses incurred to replace or repair the insured property. The property insurance shall insure against the risks and perils of fire and extended coverage, theft, vandalism, malicious mischief, collapse, flood, earthquake, airborne property, debris removal and other perils or causes of loss, including physical loss or damage to the Work and any materials or equipment in transit, at the Project Site or at another off-site storage location. The Owner shall also purchase and maintain such mechanical breakdown insurance including startup and testing, as may be required or necessary, which shall include the interests of the Owner, PSI and PSI's subcontractors.

    Each insurance policy shall name Owner as an insured and PSI or its Assignee(s), including subcontractors and sub-subcontractors, as an additional insured and loss payee, as appropriate, and shall contain a clause requiring the insurer to give PSI or its Assignee at least thirty (30) days prior written notice of any alteration in the terms of such policy or the cancellation thereof. The proceeds of any such policies shall be payable to Owner and PSI or its Assignee(s), as their interests may appear. Upon acceptance of the Project, and any UCRMs, and upon each insurance renewal date, Owner shall deliver to Provider a certificate evidencing such insurance upon request of PSI. In the event of any loss, damage, injury or accident involving the Work, Owner shall promptly provide Provider with written notice thereof and make available to Provider all information and documentation relating thereto.

22. **MUTUAL WAIVER OF SUBROGATION**. The Owner and PSI mutually waive all rights against each other and subcontractors and sub-subcontractors of PSI, for damages covered by insurance provided under Paragraph Nos. 20 and 21 and herein, except such rights as they may have to the proceeds of such insurance held by the Owner and PSI as trustees. PSI shall require similar waivers from its subcontractors.

23. **BONDS.** Prior to commencement of the Work, PSI shall execute and deliver to Owner a 100% Performance Bond and 100% Payment Bond in an amount equal to the full Contract Price at the time this Contract is executed. The bond will be written with a company licensed to transact business in the State where the work is located and has a minimum A.M. Best Rating of A VII.

    PSI shall also execute and deliver to Owner an Energy Savings Performance Bond not less than 30 days of closing final acceptance of the Project and PSI's Work and upon payment in full of the entire Contract Price. The Energy Savings Performance Bond shall assure the faithful performance of the annual Guaranteed Savings Amount, ("GSA") as provided in the Performance Guarantee Agreement (the "Guarantee"). The Energy Savings Performance Bond shall only be required to cover a two year portion of the GSA; provided, however, PSI shall be responsible to have an Energy Savings Performance Bond in place throughout the Guarantee, subject to the terms and conditions of the Guarantee.

    PSI shall place sufficient monies into an interest bearing escrow account for the purpose of paying the premiums for the Energy Savings Performance Bond through the last year of the Guarantee. Escrow account funds shall only be used for the purpose of paying said premiums while the Guarantee is in effect. If the escrow becomes

depleted of funds prior to the last Energy Savings Performance Bond being executed, PSI shall provide additional funding to the escrow account as required. After the Guarantee has been fully satisfied, any funds remaining in the escrow account shall revert to PSI.

Performance Services shall not share security in the performance guarantee with anyone other than the Owner.

24. **OWNER'S REPRESENTATIVE.** The Owner designates the following individual as its Owner's Representative, who has authority to sign, execute and issue all documents or documentation on behalf of the Owner, and otherwise bind the Owner with respect to all matters requiring Owner's decision or approval:

    Name: _____
    Title: _____
    Address: _____
    Phone: _____
    Fax: _____
    Email: _____

    Owner's Representative shall be responsible for providing Owner-supplied information and approvals in a timely manner to permit PSI to fulfill its obligations under this Contract. Owner's Representative shall also provide PSI with prompt notice if it observes any failure on the part of PSI to fulfill its contractual obligations, including any errors, omissions or defects in the performance of the Work.

25. **PSI'S REPRESENTATIVE**. PSI designates the following individual as its Contractor's Representative, who has authority to sign, execute and issue all documents or documentation on behalf of PSI, and otherwise bind the PSI with respect to all matters requiring PSI's decision or approval:

    Name: R. Scott Morris
    Title: Vice President of Operations
    Address: 4670 Haven Point Boulevard, Suite 200, Indianapolis, Indiana 46280
    Phone: (317) 713-1750
    Fax: (317) 713-1751
    Email: *smorris@performanceservices.com*

26. **DISPUTE RESOLUTION**. The parties are fully committed to working with each other throughout the Project and agree to communicate regularly with each other at all times so as to avoid or minimize disputes or disagreements. If disputes or disagreements do arise, PSI and Owner each commit to resolving such disputes or disagreements in an amicable, professional and expeditious manner so as to avoid unnecessary losses, delays and disruptions to the Work. PSI and Owner will first attempt to resolve disputes or disagreements at the field level through discussions between Contractor's Representative and Owner's Representative. If a dispute or disagreement cannot be resolved through Contractor's Representative and Owner's Representative, senior executives of PSI and the Owner, upon the request of either party, shall meet as soon as conveniently possible, but in no case later than thirty (30) days after such a request is made, to attempt to resolve such dispute or disagreement. If after the meeting between senior executives, the dispute or disagreement cannot be resolved on terms satisfactory to both parties, the parties shall submit the dispute or disagreement to non-binding mediation. The mediation shall be conducted by a mutually agreeable impartial mediator, or if the parties cannot so agree, a mediator designated by the American Arbitration Association ("AAA") pursuant to its Construction Industry Mediation Rules. The mediation will be governed by and conducted pursuant to a mediation agreement negotiated by the parties or, if the parties cannot so agree, by procedures established by the mediator. If mediation is unsuccessful, any and all disputes under this Contract shall be decided by confidential arbitration in accordance with the Construction Industry Arbitration Rules of the American Arbitration Association. Such arbitration shall be conducted in Travis County, Texas and governed by Texas law.

27. **INDEMNIFICATION.** PSI, to the fullest extent permitted by law, shall indemnify and hold harmless Owner, its officers, directors, employees and agents from and against claims, losses, damages, liabilities, including

attorneys' fees and expenses, for bodily injury, sickness or death, and property damage or destruction (other than to the Work itself) but only to the extent resulting from the negligent acts or omissions of PSI or its subcontractors or suppliers, anyone employed directly or indirectly by any of them or anyone for whose acts any of them may be liable. Any such indemnification obligation of PSI shall be excused or discharged to the extent that the claim, damage, loss and expense, or event giving rise to the demand for indemnification, defense and hold harmless is caused in whole or in part by the acts or omissions of the Owner or any party sought to be indemnified. Likewise, the Owner, to the fullest extent permitted by law, shall indemnify and hold harmless PSI and any of PSI's officers, directors, employees, or agents from and against claims, losses, damages, liabilities, including attorneys' fees and expenses, for bodily injury, sickness or death, and property damage or destruction (other than to the Work itself) but only to the extent resulting from the negligent acts or omissions of Owner, Owner's separate contractors, or anyone for whose acts any of them may be liable. The Owner shall waive any rights of subrogation with regard to any damage to all real and personal property until all of the Work has been completed and accepted by the Owner.

28. **EVENTS OF DEFAULT.**

(a) By Owner. The term Event of Default, as used in this Contract with respect to Owner, means the occurrence of any one of more of the following events: (i) Owner fails to make any payment as it becomes due in accordance with the terms of this Contract, and any such failure continues for five (5) days after the due date thereof; (ii) Owner fails to perform or observe any other covenant, condition or agreement to be performed or observed by it hereunder and such failure is not cured within ten (10) days after written notice thereof by PSI; (iii) the discovery by PSI that any statement, representation or warranty made by Owner, legal, financial or otherwise, in this Contract or in any document ever delivered by Owner pursuant hereto or in connection herewith is false, misleading or erroneous in any material respect; or (iv) Owner becomes insolvent, is unable to pay its debts as they become due, makes an assignment for the benefit of creditors, applies or consents to the appointment of a receiver, trustee, conservator or liquidator of Owner or of all or a substantial part of its assets, or fails to provide the financial assurances required by Paragraph No. 15.

(b) By PSI. The term Event of Default, as used in this Contract with respect to PSI, means the occurrence of any one or more of the following events: (i) PSI's failure to perform its obligations in the manner and within the time prescribed by the terms of the UAR subject to the provisions of Paragraph No. 6; (ii) failure to pay, within 30 days of notice that payment is due, the amount required by the terms of the Guarantee; or (iii) failure to repair or replace defective equipment, material or workmanship within the Warranty Period within 60 days after receipt of notice from the Owner.

29. **REMEDIES.** Upon the occurrence of an Event of Default, either party may, at its option, exercise any right, remedy, or privilege which may be available to it under applicable law, including the right to (i) proceed by appropriate action to enforce the terms of this Contract, (ii) recover damage for the breach of this Contract, and (iii) rescind this Contract as to any or all of the UCRM's. In addition, the parties shall remain liable for all covenants and indemnities under this Contract, and for all attorney fees and other costs and expenses, including court costs, incurred with respect to the enforcement of any of the remedies listed above or any other remedy available to either party to this Contract.

30. **MUTUAL WAIVER OF CONSEQUENTIAL DAMAGES**. The Owner and PSI mutually waive any and all claims against each other for any and all consequential and/or speculative damages or losses and incidental costs and expenses arising out of or relating to the Contract and whether arising in contract, warranty, tort (including negligence), strict liability or otherwise. This mutual waiver includes:

(a) damages incurred by the Owner for rental expenses, for losses of use, business interruption, income, profit, financing, business and reputation, and for loss of management or employee productivity or of the services of such persons; and

(b) damages incurred by PSI for principal office expenses including the compensation of personnel stationed there, for losses of financing, business and reputation, and for loss of profit except anticipated profit arising directly from the Work.

31. **OWNER'S REMEDIES.** The Owner's remedies with respect to equipment found to be defective in material or workmanship, or the installation thereof, shall be limited exclusively to the right of repair or replacement of such defective equipment. IN NO EVENT SHALL PSI BE LIABLE FOR CLAIMS (INCLUDING BUT NOT LIMITED TO CLAIMS BASED UPON CONTRACT, STATUTE, TORT (NEGLIGENT OR INTENTIONAL), STRICT LIABILITY OR EXPRESS OR IMPLIED WARRANTY) FOR ANY OTHER DAMAGES, WHETHER DIRECT, IMMEDIATE, FORESEEABLE, CONSEQUENTIAL, OR SPECIAL OR FOR ANY EXPENSES INCURRED BY REASON OF THE USE OR MISUSE OF EQUIPMENT, OR FAILURE OF SUCH EQUIPMENT, REGARDLESS OF THE CONFORMIITY WITH THE TERMS AND CONDITIONS THIS CONTRACT.

32. **ENFORCEMENT OF CONTRACT.** In the event that either party is required to enforce any of the terms and conditions of this Contract, or is entitled to recover from either party any damages or moneys, then such prevailing party shall be entitled to recover its attorney fees incurred for all investigation, negotiation, litigation, arbitration and other such services commonly performed by attorneys, and all court costs, fees paid to experts, arbitration fees and similar expenses.

33. **MODIFICATIONS.** Additions, deletions, and modifications to the Contract may be made upon the mutual written agreement of the parties. Such additions may include proposals from PSI for additional Work.

34. **NOTICES.** All notices or communications related to this Contract shall be in writing and shall be deemed served if and when sent by email, facsimile, U.S. mail or hand delivery to the representative listed in Paragraph Nos. 24 and 25 above..

35. **WAIVER**. No action or failure to act by the PSI shall constitute a waiver of any right or duty afforded any of them under the Contract, nor shall any such action or failure to act constitute an approval of or acquiescence in any breach hereunder, except as may be specifically agreed in writing.

36. **SEVERABILITY**. Every provision of the Contract is intended to be severable such that, if any term or provision hereof is illegal or invalid for any reason whatsoever, such prevision shall be severed from the Contract and shall not affect the validity of the remainder of the Subcontract.

37. **CONTROLLING LAW.** This Contract, and all matters arising out of or relating to it, shall be governed by and construed in accordance with the law of the State of Texas. Venue and forum for any action or proceeding shall be in a court of competent jurisdiction in Travis County, Texas.

38. **ASSISTANCE WITH FEDERAL PROGRAMS.** The Internal Revenue Code allows various tax benefits to companies that implement energy efficiency and renewable energy projects with public entities in some situations. Owner agrees to assist PSI in applying for these federal programs, should any be applicable due to the execution of this Contract and the performance of the Work. PSI agrees to reimburse the Owner for any labor or other costs incurred by Owner in helping PSI complete applications for these programs.

39. **SOFTWARE UPGRADES AND COMPATIBILITY; REMOTE ACCESS.** It is understood that from time to time operating software that may be an inherent part of Owner's facilities and/or the Project improvements will be upgraded and/or transitioned to new platform by the developer of such software, outside of the control of PSI. Owner shall be responsible for all costs associated with any and all software upgrades and/or compatibility requirements. In addition, during the Contract Time and the period of the Guarantee, Owner agrees to grant PSI remote access as follows:

    (a) Access to Owner's HVAC system via VPN connection;
    (b) Access to relay emails from the HVAC devices for alarm notification and energy reporting;
    (c) Access to the HVAC devices for retrieval of weather data, time sync and other necessary functions;
    (d) Access for use in commissioning HVAC devices.

END OF DOCUMENT

EXHIBIT A - UTILITY ASSESSMENT REPORT

FOR

Hays County, Texas

712 S. Stagecoach Trail
San Marcos, TX 78666

Conducted by:

Performance Services

3010 LBJ Freeway
Suite 1200
Dallas, Texas 75234
January 26, 2017

Number of facilities audited: 9
Total gross square footage: 447,155

This document contains Performance Services Trade Secrets and Confidential information to be used by the addressee for evaluating the PSI proposal.
Addressee shall not disclose the Confidential information to third parties without written consent of Performance Services.

Contents

I. EXECUTIVE SUMMARY 3
A. BACKGROUND 3
B. BUILDINGS/FACILITIES ANALYZED 5
Table 1A: List of Facilities included in Report 5
C. COMPOSITE PROJECT SUMMARY 6
Table 1B: List of Recommended UCRMS 6
Table 1C: Summary of Project: Financial and Savings 7
TABLE 1D: Summary of Utility Cost Reduction Measures and Project Totals 8
II. GENERAL FACILITY DESCRIPTIONS 9
A. FACILITY DESCRIPTION 9
B. BUILDING DESCRIPTIONS 9
Table 2A. BUILDING DESCRIPTIONS 11
Table 2B: EQUIPMENT LIST 12
C. UTILITY COST REDUCTION MEASURES 16
D. UTILITY ANALYSIS METHODOLOGY 17
III. BASE YEAR UTILITY CONSUMPTION DATA 18
IV. UTILITY RATE SCHEDULE ANALYSES 24
A. ELECTRIC RATE SCHEDULE ANALYSIS 24
B. GAS UTILITY RATE SCHEDULE ANALYSIS 26
C. WATER AND WASTEWATER UTILITY RATE SCHEDULE ANALYSIS 27
V. TECHNICAL ANALYSIS 28
A. UTILITY COST REDUCTION MEASURES 28
B. DETAILED COMMISSIONING PLAN 46
VI. PROJECT FINANCIAL ANALYSIS 58
VIII. APPENDICES 55
A. UTILITY RATE SCHEDULES
B. DETAILED BACKUP CALCULATIONS & COMPUTER INPUT/OUTPUT SHEETS
C. MANUFACTURER'S LITERATURE
D. DETAILED IMPLEMENTATION PLAN
E. OTHER SUPPORTING DOCUMENTS - Measurement & Verification Plan

DRAFT

This document contains Performance Services Trade Secrets and Confidential information to be used by the addressee for evaluating the PSI proposal.
Addressee shall not disclose the Confidential information to third parties without written consent of Performance Services.

Utility Assessment Report of
Hays County, TX, 712 S. Stagecoach Trail
San Marcos, TX 78666
Contact: Mr. Clint Garza
Phone Number: (512) 393-2150

I. EXECUTIVE SUMMARY

A. BACKGROUND

PSI was selected by Hays County, TX on May 17, 2016, to begin developing a Utility Assessment Report for an Energy Savings Performance Contract for the following four Hays County sites:

- Government Center - 712 S. Stagecoach Trail, San Marcos, TX 78666– Three story, 236,000 gross square foot courts and office building
- Court House - 111 E. San Antonio St, San Marcos, TX 78666 – Three story, 21,396 gross square feet office building
- Juvenile Detention - 2220 Clovis Barker Road, San Marcos, TX 78666 – One story, 43,222 gross square feet detention and office building
- Development Services - 2171 Yarrington Road, San Marcos, TX 78666 – One story, 14,058 gross square feet office building with vehicle maintenance shop
- Health Department - 401-A Broadway, San Marcos, TX 78667 – One story, 13,327 gross square feet health clinic
- Precinct 2 - 5458 FM 2770, Kyle, TX 78640 – One story, 14,174 gross square feet office and court building
- Precinct 3 - 200 Stillwater Drive, Wimberley, TX 78676 – One story, 8,521 gross square feet office and court building
- Precinct 4 - 195 Roger Hanks Parkway #3, Dripping Springs, TX 78620 – One story, 6,272 gross square feet office and court building
- Jacobs Well Natural Center - 830 Jacobs Well Road, Wimberley, TX 78676 – One story, 2,400 gross square feet office building
- Jail - 1307 Uhland Road, San Marcus, TX 78666 – One story, 83,306 gross square feet detention facility

Site audits were performed in May and June 2016.

Hays County objectives for this project are as follows:

- Energy and water savings
- Improve Government Center, server room space conditioning
- Replace fluorescent, incandescent and HID lighting with LED lighting
- Address occupant comfort and deferred maintenance at the Court House
- Water controls at Jail
- Web based building automation
- Renewable energy
- Minimize future operational and maintenance costs
- Cost effective renewable energy

This document contains Performance Services Trade Secrets and Confidential information to be used by the addressee for evaluating the PSI proposal.
Addressee shall not disclose the Confidential information to third parties without written consent of Performance Services.

- Reduce future utility usage/costs

This report documents PSI's findings and recommendations. The data presented herein includes engineering and financial analyses, and savings calculation methodology associated with each facility improvement and conservation measure that is recommended by PSI and approved by Hays County. The conservation measures recommended herein will result in the desired reduction in energy and water consumption through improved efficiencies, improved controls and related control strategies.

In addition to significant cost reductions attributable to electric, gas, water and wastewater utilities, the improvement measures recommended herein reduce emissions of greenhouse gases. Additionally, Hays County will benefit from a number of instances where PSI is including new equipment to replace or improve existing aged equipment infrastructure. These equipment replacements and additions eliminate the need for Hays County to devote resources to fund and procure such equipment repairs and replacements while benefiting Hays County's operations and reliability of services.

The following is a summary of the conservation measure types included in this project:

- LED lighting
- Power quality improvement
- Building controls
- Window restoration
- Heating Ventilating and Air Conditioning (HVAC) efficiency improvements
- Water efficiency
- Solar PV

Project Benefits:

1. Eliminate cost of repairs and replacement associated with the 29 year old 600 kW standby generator serving the Hays County Jail.
2. Effectively increase the amount of bond dollars available for the Hays County Jail expansion and remodel by including energy and water conservation scope (LED lighting, building automation system, new standby generator, water controls) within this project.
3. Improved space temperature control within court rooms on the third floor of the Government Center and within the server room located within the Government Center.
4. Increase the number of hours worked by staff at both the Development Services building and Government Center by having both buildings on standby generators.
5. Permit space temperature control within the Hays County Jail during power outages.
6. Reduced lighting operation and maintenance costs.
7. Improved occupant comfort within the Court House.
8. Improved maintainability of HVAC equipment at the Court House.
9. Eliminate cost of HVAC equipment repair and
10. Eliminate costly HVAC repairs and replacement at Court House.
11. Web based building automation systems at all buildings except Juvenile Detention. Web based building controls will facilitate remote control and troubleshooting of building HVAC systems.
12. Eliminates need for Hays County to spend approximately $45,000 to upgrade JCI building automation system at the Government Center.

This document contains Performance Services Trade Secrets and Confidential information to be used by the addressee for evaluating the PSI proposal. Addressee shall not disclose the Confidential information to third parties without written consent of Performance Services.

B. BUILDINGS/FACILITIES ANALYZED

PSI has conducted a detailed assessment of energy assets and energy use for Hays County.

This study focuses on electricity and water as together they account for over 95 percent of the utility budget. PSI has identified areas for conservation and increased operational efficiencies. Although there are numerous facilities and sites that comprise Hays County, this study targeted the areas where energy savings and retrofits provide the greatest value and return on investments. The following table lists facilities assessed in this report.

TABLE 1A: List of Facilities Included in Report

ID	Facility Name	Use	HVAC & Electrical Systems	Gross Area (SF)
GC	Government Center	Office	**Mech:** VAV package rooftop units with NG and electric heating. **Elect**: 480 V, 3 ϕ Secondary single meter	236,000
CH	Court House	Office	**Mech:** Package and split systems. DX cooling and natural gas heating. **Elect:** 208 V, 3 ϕ Secondary single meter	21,396
JD	Juvenile Detention	Corrections	**Mech:** Package and split systems. DX cooling and natural gas heating. **Elect:** 208 V, 3 ϕ Secondary single meter	43,222
DS	Development Services	Office	**Mech:** Split systems. DX cooling and electric heating. **Elect:** 208 V, 3 ϕ Secondary single meter	14,058
HD	Health Department	Office	**Mech:** Split systems. DX cooling and electric heating. **Elect:** 208 V, 3 ϕ Secondary single meter	13,327
P2	Precinct 2	Office	**Mech:** Split systems. DX cooling and electric heating. **Elect:** 208 V, 3 ϕ Secondary single meter	14,174
P3	Precinct 3	Office	**Mech:** Split systems. DX cooling and electric heating. **Elect:** 208 V, 3 ϕ Secondary single meter	6,272
P4	Precinct 4	Office	**Mech:** Split systems. DX cooling and electric heating. **Elect:** 208 V, 3 ϕ Secondary single meter	6,272
JW	Jacobs Well Natural Center	Office	**Mech:** Split systems. DX cooling and electric heating. **Elect:** 240 V, 1 ϕ Secondary single meter	2,400
J	Jail	Corrections	**Mech:** Package and split systems. DX cooling and natural gas heating. **Elect:** 480 V, 3 ϕ Secondary single meter	83,306

This document contains Performance Services Trade Secrets and Confidential information to be used by the addressee for evaluating the PSI proposal. Addressee shall not disclose the Confidential information to third parties without written consent of Performance Services.

C. COMPOSITE PROJECT SUMMARY

Table 1B: List of Recommended Utility Cost Reduction Measures

Matrix of Opportunities									
	1	2	3	4	5	6	7	8	9
Building	LED Lighting	Power Conditioning	Solar PV	Demand Response	Retro-Cx & BAS with Tridium Front End	Water Controls	Window Film	Window Restoration	HVAC & Plumbing Upgrades
Government Center	◆	◆	◆	◆	◆	◆			
Court House	◆	◆			◆		◆	◆	◆
Juvenile Detention	◆	◆		◆					
Development Services	◆	◆		◆	◆				
Health Department	◆	◆			◆				
Precinct 2	◆	◆			◆				
Precinct 3		◆			◆				
Precinct 4	◆	◆			◆				
Jacobs Well Natural Center	◆	◆			◆				
Jail	◆	◆	◆	◆	◆	◆			◆

This document contains Performance Services Trade Secrets and Confidential information to be used by the addressee for evaluating the PSI proposal.
Addressee shall not disclose the Confidential information to third parties without written consent of Performance Services.

Table 1 C: Summary of Project: Financial and Savings

SUMMARY OF PROJECT		
	Total[1]	
kWh Savings:	2,970,017	kWh/yr.
Demand Savings:	7,537	kW/yr.
Gas Savings:	7,864	Therms/yr.
Btu Savings:[2]	35,239	MMBtu/yr.
Water Savings:	8,096	kGal/yr.
Cost Savings:	452,260	$/yr.
Base Year Cost Reduction:	32%	%
Implementation Cost	5,634,371	$
Payback Period	12.5	Years

1. Building O&M Savings identified for project justification are included in the total.
2. BTU savings should be calculated on the basis of source BTU's (11,600 BTU/kWh and 1,030,000 BTU/MCF)

This report identifies a wide variety of energy conservation measures. Taken collectively, these are the Utility Cost Reduction Measures (UCRM's) recommended by PSI. If implemented in the form recommended by PSI, these UCRMs will result in the savings and costs summarized above. The savings for the recommended composite project listed above account for interdependence of savings of individual UCRMs. Costs for the project likewise account for savings, which accrue from installing several UCRMs at once. All equipment, material, implementation planning and engineering costs for the recommended UCRM's are included and reflect all UCRM's being done at one time under a single construction project. PSI provides professionally managed, turnkey projects for customers and proposes this project as a single turn-key transaction although a number of subcontractors and vendors are involved and managed by PSI.

DRAFT

This document contains Performance Services Trade Secrets and Confidential information to be used by the addressee for evaluating the PSI proposal. Addressee shall not disclose the Confidential information to third parties without written consent of Performance Services.

TABLE 1D Summary of Utility Cost Reduction Measures and Project Totals

		ANNUAL SAVINGS										
UCRM No.	UCRM Title	Electric Energy (kWh/yr)	Demand (kW/yr)	Electric ($/yr)	Natural Gas (th/yr)	Natural Gas ($/yr)	Water/Sewer (kgal/yr)	Water/Sewer ($/yr)	Other Savings	Project Cost ($)	Payback (yrs.)	Estimated Project Lifetime (yrs.)
1	LED Lighting	1,190,455	3,376	$103,024					$39,687	$1,062,712	7.4	20
2	Power Conditioning	185,335	254	$15,207						$179,200	11.8	20
3	Solar PV	987,790	3,387	$87,965						$1,522,893	17	25
4	Demand Response								$27,450	$663,415	24.2	20
5	Retro-Cx & BAS with Tridium Front End	587,793	480	$47,056						$868,835	18	20
6	Water Controls				7,864	$5,112	8,096	$100,181		$680,035	6.5	20
7	Window Film	9,152	13	$752						$42,302	56	20
8	Window Restoration	3,480	10	$307					$24,990	$374,843	15	50
9	HVAC & Plumbing Upgrades	6,012	18	$530						$240,136	453	20
Totals		**2,970,017**	**7,537**	**$254,841**	**7,864**	**$5,112**	**8,096**	**$100,181**	**$92,127**	**$5,634,371**	**12.5**	

Utility Assessment Report Cost	$75,000	Included in above costs
Initial Measurement & Verification Cost	$0	
Construction Bonding Cost	$67,612	Included in above costs
Owner Buydown	$0	
IMPLEMENTATION TOTALS	**$5,634,371**	
1st Year M&V Service Cost	$24,040	May be cancelled at any time
Non Energy Savings (Lighting Materials & Demand Response)	$92,127	Shown above
Financing Cost	$1,131,322	

DRAFT

II. GENERAL FACILITY DESCRIPTIONS

A. FACILITY DESCRIPTION

The PSI audit team conducted on-site tours of all facilities included in the project as listed in Section 1 of this report and described in detail below. During the audit, PSI interviewed key staff members and building occupants to get a better understanding of each of the sites. PSI also met with Hays County staff and gathered information on current facility upgrade projects being implemented at the project sites. An overview of the facility upgrade projects being performed by other contractors within the project buildings follow:

Government Center

- None

Court House

- HVAC repair

Juvenile Detention

- None

Development Services

- None

Health Department

- HVAC repair

Precinct 2

- None

Precinct 3

- Remodel

Precinct 4

- None

Jacobs Well Natural Center

- None

Jail

- Inmate monitoring upgrades

While a number of improvement opportunities are common across most Hays County facilities such as LED lighting, some facilities have specific improvement opportunities that are unique. PSI objective was to identify the least efficient facilities and focus on providing cost-effective solutions and improvements in keeping with the goals of Hays County while complying with requirements set

DRAFT

This document contains Performance Services Trade Secrets and Confidential information to be used by the addressee for evaluating the PSI proposal. Addressee shall not disclose the Confidential information to third parties without written consent of Performance Services.

forth by Hays County and State Energy Conservation Office. In a number of instances the energy improvement measures will provide added "non-energy" benefits to Hays County.

In most facilities, only three utilities (electricity, water and waste water) exist. Natural gas is only present at the Government Center, Court House, Juvenile Detention, and the Jail. The City of San Marcos continues to be a regulated market. As such, the City of San Marcos is the electric provider for sites within the City. Please refer to Section 4 – Utility Rate Schedule Analysis for detailed explanation and discussion of PSI's approach for addressing electric utility costs.

CenterPoint and Wimberley Hydro supply natural gas at market-based price determined by the date of production.

Water and waste water services to Hays County facilities is supplied by the local city where the building resides. As with electricity and gas services, water costs for all included City facilities is in keeping with published tariffs and rates.

B. BUILDING DESCRIPTIONS

The following tables provide detailed information gathered during our site audits of the facilities included within this project. Additional general information follows:

- Except for the detention facilities, the project buildings are occupied approximately 55 hours per week
- Except for the detention facilities, buildings are typically closed on government holidays and weekend
- The County's primary server room is located on the first floor of the Government Center
- The Courts are used mornings, Monday through Thursday except for holidays
- The number of personal computers in these buildings approximately equals the number of building staff
- Buildings are occupied by Hays County staff and visitors
- Electric space heat in most Hays County buildings
- Electric domestic water heaters in most Hays County buildings

DRAFT

This document contains Performance Services Trade Secrets and Confidential information to be used by the addressee for evaluating the PSI proposal. Addressee shall not disclose the Confidential information to third parties without written consent of Performance Services.

Table 2A. Table of relevant information concerning each of the buildings included in this report.

Building Name	Address	Function	Conditioned Area (SF)	Number of Stories	HVAC Type	HVAC Controls	Wall Construction Type	Typical Occupancy	Year of Construction	To be Removed from Service in Next 10 Yrs
Government Center	712 S. Stagecoach Trail, San Marcos, TX 78666	Office/Court Building	236,000	3	RTUs	JCI Metasys	Concrete Block	450	2012	No
Court House	111 E. San Antonio St, San Marcos, TX 78666	Office Building	21,396	3	4-Trane Split Systems, 3-Trane Package Units	Prog. T-Stat	Concrete Block	30	1882 / 1908	No
Juvenile Detention	2220 Clovis Barker Road, San Marcos, TX 78666	Correctional	43,222	1	17-RTUs	Prog. T-Stat	Concrete Block	90	2003	No
Development Services	2171 Yarrington Road, San Marcos, TX 78666	Office Building	14,058	1	13-Trane Split Systems	Prog. T-Stat	Concrete Block	70	2011	No
Health Department	401-A Broadway, San Marcos, TX 78667	Office Building	13,327	1	5-Trane Split Systems	Prog. T-Stat	Concrete Block	30	2002	No
Precinct 2	5458 FM 2770, Kyle, TX 78640	Office Building	14,174	1	12-Trane Split Systems	Prog. T-Stat	Concrete Block	50	2013	No
Precinct 3	200 Stillwater Drive, Wimberley, TX 78676	Office Building	8,521	1	2-Split Systems, 5 Rooftop Units	Prog. T-Stat	Concrete Block	30	2016 Remodel	No
Precinct 4	195 Roger Hanks Parkway #3, Dripping Springs, TX 78620	Office Building	6,272	1	4-Trane Split Systems	Prog. T-Stat	Concrete Block	25	2009	No
Jacobs Well Natural Center	830 Jacobs Well Road, Wimberley, TX 78676	Office Building	2,400	1	1-Goodman Split System	Prog. T-Stat	Concrete Block	4	2001	No
Jail	1307 Uhland Road, San Marcus, TX 78666	Correctional	83,306	1	30 RTUs	Prog. T-Stat	Concrete Block	426	1987	No

DRAFT

This document contains Performance Services Trade Secrets and Confidential information to be used by the addressee for evaluating the PSI proposal.
Addressee shall not disclose the Confidential information to third parties without written consent of Performance Services.

Table 2B: EQUIPMENT LIST The Tables below provide descriptions of all mechanical equipment and collection data regarding power use.

Building Name: **Government Center**

Equipment Name	Quantity	Nameplate Data	Size	Field Measurement	Efficiency	Annual Operating Hours	Comment / Condition / Area Served
Building Automation System	1	JCI Metasys	NA	NA	NA	8760	Good condition
Package Rooftop Unit	1	Aaon	31 tons	10 EER (D)	10 EER	4160	Good condition
Package Rooftop Unit	3	Aaon	40 tons	10 EER (D)	10 EER	4160	Good condition
Package Rooftop Unit	3	Aaon	50 tons	11 EER (D)	11 EER	4160	Good condition
Package Rooftop Unit	2	Aaon	60 tons	11 EER (D)	11 EER	4160	Good condition
Package Rooftop Unit	1	Aaon	70 tons	10 EER (D)	10 EER	4160	Good condition
Package Rooftop Unit	2	Aaon	75 tons	10 EER (D)	10 EER	4160	Good condition
CRAC	3	Data Aire	5 tons	11 EER (D)	11 EER	8760	Server Room
Exhaust/Relief Fans	7	Horizontal Draw Through	10 hp total		NA	8760	Constant speed

Building Name: **Court House**

Equipment Name	Quantity	Nameplate Data	Size	Field Measurement	Efficiency	Annual Operating Hours	Comment / Condition / Area Served
Building Automation System	1	None			NA	8760	Individual thermostats
Package Rooftop Unit	3	YSC Model	32.5 tons		11 EER	3000	Fair to good condition
Split System	2	Trane TWA Series	15 tons		11 EER	3000	Fair to good condition
Heat Pump	2	Trane TWA Series	5 ton		10 EER	3000	Fair to poor condition
Exhaust/Relief Fans	2	Horizontal Draw Through	<1 hp total			8760	Constant speed

This document contains Performance Services Trade Secrets and Confidential information to be used by the addressee for evaluating the PSI proposal.
Addressee shall not disclose the Confidential information to third parties without written consent of Performance Services.

Building Name: **Juvenile Detention**

Equipment Name	Quantity	Nameplate Data	Size	Field Measurement	Efficiency	Annual Operating Hours	Comment / Condition / Area Served
Building Automation System	1	None			NA	8760	NA
Split System	2	Carrier	3 ton		13 SEER	8760	Fair to Good condition
Split System	6	Carrier with One Trane	5 ton		10 EER	8760	Fair condition
Split System	2	Rheem with 7.2kW of electric heat	3 ton		1.25 kW/ton	8760	Fair to Good condition
Package Unit	2	Rheem & Carrier units	10 ton		1.3kW/Ton	8760	Fair to Good condition
Package Unit	4	2-Rheem, 2-Carrier	12.5 ton		1.3kW/Ton	8760	Fair to Good condition
Package Unit	1	Carrier	25 ton		1.3kW/Ton	8760	Fair to Good condition
Domestic Water Heater	2	Universal	125,000 BTUH		80\% (D)	8750	Fair to Good condition

Building Name: **Development Services**

Equipment Name	Quantity	Nameplate Data	Size	Field Measurement	Efficiency	Annual Operating Hours	Comment / Condition / Area Served
Building Automation System	1	None			NA	8760	NA
Split System	1	Mitsubishi	2 ton		12 SEER	8760	Good condition
Split System	2	Trane and Sanyo	1.5 ton		13 SEER	8760	Good condition
Split System	1	Trane	2 ton		14 SEER	8760	Good condition
Split System	4	Trane	3 ton		14 SEER	8760	Good condition
Split System	1	Trane	3.5 ton		14 SEER	8760	Good condition
Split System	3	Trane	4 ton		14 SEER	8760	Good condition
Split System	2	Trane	3 ton		14 SEER	8760	Good condition
Split System	1	Aaon	10 ton		12 SEER	8760	Good condition
Area Heater	4	Electric Resistance Heater	Varies		100% (D)	800	Good condition
Shop Tools		Pnuematic & Electric				2000	Good condition
Exhaust/Relief Fans	3	Horizontal Draw Through				8760	Constant speed
Air Compresser	1	Two compressor			89% (D)	2000	Pnuematic controls

DRAFT

This document contains Performance Services Trade Secrets and Confidential information to be used by the addressee for evaluating the PSI proposal.
Addressee shall not disclose the Confidential information to third parties without written consent of Performance Services.

Building Name: **Health Department**

Equipment Name	Quantity	Nameplate Data	Size	Field Measurement	Efficiency	Annual Operating Hours	Comment / Condition / Area Served
Building Automation System	1	None			NA	8760	NA
Split System	1	Trane	1.5 ton		10 EER	3500	Fair condition
Split System	1	Trane	3 ton		10 EER	3500	Fair condition
Split System	2	Trane	6 ton		10 EER	3500	Fair condition
Split System	2	Trane	10 ton		10 EER	3500	Fair condition
Split System	1	Trane	12.5 ton		10 EER	3500	Fair condition
Fume Hood	1					50	Good condition
Exhaust/Relief Fans	2	Horizontal Draw Through			NA	8760	Constant speed

Building Name: **Precinct 2**

Equipment Name	Quantity	Nameplate Data	Size	Field Measurement	Efficiency	Annual Operating Hours	Comment / Condition / Area Served
Building Automation System	1	None			NA	8760	NA
Split System	1	Mitsubishi	1 ton		12 SEER	8760	Fair condition / Server room
Split System	1	Trane	2.5 ton		12 SEER	3500	Fair to good condition
Split System	3	Trane	3 ton		12 SEER	3500	Fair to good condition
Split System	1	Trane	3.5 ton		12 SEER	3500	Fair to good condition
Split System	7	Trane	5 ton		12 SEER	3500	Fair to good condition
Exhaust/Relief Fans	2	Horizontal Draw Through			NA	8760	Constant speed

This document contains Performance Services Trade Secrets and Confidential information to be used by the addressee for evaluating the PSI proposal.
Addressee shall not disclose the Confidential information to third parties without written consent of Performance Services.

Building Name: **Precinct 3**

Equipment Name	Quantity	Nameplate Data	Size	Field Measurement	Efficiency	Annual Operating Hours	Comment / Condition / Area Served
Building Automation System	1	None			NA	8760	NA
Split System	5	Trane & Lennox	4 ton		13 SEER	3500	Fair to good condition
Rooftop Unit	2	Trane	4 ton		13 SEER	3500	Constant speed

Building Name: **Precinct 4**

Equipment Name	Quantity	Nameplate Data	Size	Field Measurement	Efficiency	Annual Operating Hours	Comment / Condition / Area Served
Building Automation System	1	None			NA	8760	NA
Split System / Heat Pumps	6	Trane	3.5 ton		13 SEER	3500	Fair to good condition
Exhaust/Relief Fans	2	Horizontal Draw Through			NA	8760	Constant speed

Building Name: **Jacobs Well Natural Center**

Equipment Name	Quantity	Nameplate Data	Size	Field Measurement	Efficiency	Annual Operating Hours	Comment / Condition / Area Served
Building Automation System	1	None			NA	8760	NA
Split System / Heat Pumps	1	Goodman Company	4 ton		9 EER	3500	Fair condition
Exhaust/Relief Fans	1	Horizontal Draw Through			NA	8760	Constant speed

Building Name: **Jail**

Equipment Name	Quantity	Nameplate Data	Size	Field Measurement	Efficiency	Annual Operating Hours	Comment / Condition / Area Served
Building Automation System	1	None			NA	8760	NA
Package Rooftop Unit	16	Carrier - Model 50-TC	7.5 ton		13 SEER	8760	Good condition - 2011 Install
Package Rooftop Unit	2	Carrier - Model 50-TC	8.5 ton		13 SEER	8760	Good condition - 2011 Install
Package Rooftop Unit	1	Carrier - Model 50-TC	10 ton		13 SEER	8760	Good condition - 2011 Install
Package Rooftop Unit	11	Carrier - Model 50-TC	5 ton		13 SEER	8760	Good condition - 2011 Install
Domestic Water Heater	4	Universal	199,000 BTUH		84% (D)	8760	Good condition

This document contains Performance Services Trade Secrets and Confidential information to be used by the addressee for evaluating the PSI proposal.
Addressee shall not disclose the Confidential information to third parties without written consent of Performance Services.

C. UTILITY COST REDUCTION MEASURES (UCRMs)

Matrix of Opportunities									
	1	2	3	4	5	6	7	8	9
Building	LED Lighting	Power Conditioning	Solar PV	Demand Response	Retro-Cx & BAS with Tridium Front End	Water Controls	Window Film	Window Restoration	HVAC & Plumbing Upgrades
Government Center	◆	◆	◆	◆	◆	◆			
Court House	◆	◆			◆		◆	◆	◆
Juvenile Detention	◆	◆		◆					
Development Services	◆	◆		◆	◆				
Health Department	◆	◆			◆				
Precinct 2	◆	◆			◆				
Precinct 3		◆			◆				
Precinct 4	◆	◆			◆				
Jacobs Well Natural Center	◆	◆			◆				
Jail	◆	◆	◆	◆	◆	◆			◆

DRAFT

This document contains Performance Services Trade Secrets and Confidential information to be used by the addressee for evaluating the PSI proposal.
Addressee shall not disclose the Confidential information to third parties without written consent of Performance Services.

D. UTILITY ANALYSIS METHODOLOGY

Performance Services has developed energy baselines from utility data provided by the Hays County. Electrical baselines were established by using 2015 utility data.

Energy savings were determined using standard engineering calculation spreadsheets and computer modeling using the latest version of eQuest (3.65). Concerning building simulation modeling, prior to calculating savings, baseline models were constructed that provided statistically valid baseline matches. Simulation models were constructed and used to model savings for the following buildings:

- Court House

Engineering calculation spreadsheets were used to determine energy savings in the following buildings:

- Government Center
- Court House
- Juvenile Detention
- Development Services
- Heath Department
- Precinct 2
- Precinct 4
- Jacobs Natural Resource Center
- Jail

Savings calculations within the Appendix include the following:

- LED lighting
- Power conditioning
- Solar PV
- Demand response
- Building Automation System/Retro-commissioning
- Water retrofits
- Window film
- Window restoration

The following table shows both existing and projected EUIs.

DRAFT

This document contains Performance Services Trade Secrets and Confidential information to be used by the addressee for evaluating the PSI proposal. Addressee shall not disclose the Confidential information to third parties without written consent of Performance Services.

EUI Comparison Table

Building			EUI	
#	Name	Sq. Ft. w/o Parking Garages	Existing Total kBTU/SqFt/Yr	Projected Total kBTU/SqFt/Yr
1	Government Center	236,000	62	38
2	Court House	21,396	49	33
3	Juvenile Detention	43,222	97	78
4	Development Services	14,058	50	39
5	Health Department	13,327	63	43
6	Precinct 2	14,174	37	29
7	Precinct 4	6,272	55	31
8	Jacobs Well Natural Center	2,400	27	18
9	Jail	83,306	161	120

DRAFT

This document contains Performance Services Trade Secrets and Confidential information to be used by the addressee for evaluating the PSI proposal. Addressee shall not disclose the Confidential information to third parties without written consent of Performance Services.

III. BASE YEAR UTILITY CONSUMPTION DATA

Table 4: Base Year Utility Consumption

For prior 12 month period beginning January, 2014 and ending December, 2014

Bldg. ID: Government Center
Gross SF 236,000
EUI: 62,151 Btu/SF
ECI: $ 1.71 Per SF

Reading Date	Electrical					Natural Gas		Irrigation		Water/Sewer	
Month	Consumption (kWh)	Demand Metered (kW or kVA)	Demand Charged (kW or kVA)	Power Factor	* Total Cost ($)	Consumption (CCF)	Cost ($)	Consumption (Kgal)	Cost ($)	Consumption (Kgal)	* Cost ($)
January	327,000			0.9	$ 27,320	333	$ 279	117	$ 898	67	$ 958
February	287,000			0.9	$ 24,323	274	$ 249	147	$ 1,104	60	$ 855
March	308,000			0.9	$ 26,124	299	$ 269	187	$ 1,385	70	$ 1,005
April	297,000			0.9	$ 25,757	279	$ 254	161	$ 1,206	64	$ 909
May	323,000			0.9	$ 27,553	291	$ 262	147	$ 1,108	67	$ 957
June	351,000			0.9	$ 30,672	317	$ 283	163	$ 1,216	69	$ 983
July	404,000			0.9	$ 38,562	262	$ 242	186	$ 1,379	174	$ 2,483
August	397,000			0.9	$ 38,445	277	$ 237	185	$ 1,376	109	$ 1,559
September	385,000			0.9	$ 40,916	304	$ 257	267	$ 2,042	65	$ 929
October	363,000			0.9	$ 39,659	279	$ 239	351	$ 2,663	59	$ 843
November	367,000			0.9	$ 40,755	291	$ 248	0	$ 160	58	$ 835
December	386,000			0.9	$ 41,068	267	$ 230	0	$ 160	50	$ 708
Annual	4,195,000				$401,154	3,473	$ 3,048	1,910	$ 14,699	912	$ 13,023

	Electricity	Natural Gas	Water
Company Name:	City of San Marcos	CenterPoint Energy	City of San Marcos
Company Rate Schedule	Government Rate	Government Rate	General Services

* Certification: PE

Charges have been recomputed and are correct:

_____

Signature and Title:

Note: For weather normalized baseline, follow commonly accepted protocols, US DOE IPMVP, or ASHRAE Guidelines 14P

DRAFT

This document contains Performance Services Trade Secrets and Confidential information to be used by the addressee for evaluating the PSI proposal.
Addressee shall not disclose the Confidential information to third parties without written consent of Performance Services.

Table 4: Base Year Utility Consumption

Bldg. ID: Court House
Gross SF 21,396
EUI: 49,355 Btu/SF
ECI: $ 1.32 Per SF

For prior 12 month period beginning January, 2014 and ending December, 2014

Reading Date	Electrical					Natural Gas		Irrigation		Water/Sewer	
Month	Consumption (kWh)	Demand Metered (kW or kVA)	Demand Charged (kW or kVA)	Power Factor	* Total Cost ($)	Consumption (CCF)	Cost ($)	Consumption (Kgal)	Cost ($)	Consumption (Kgal)	* Cost ($)
January	18,780	N/A	$0.00	0.9	$ 1,636	609	$ 482	0	$ 95	3	$ 47
February	17,460	N/A	$0.00	0.9	$ 1,578	230	$ 198	350	$ 96	4	$ 56
March	15,600	N/A	$0.00	0.9	$ 1,433	338	$ 276	1,150	$ 98	4	$ 57
April	17,760	N/A	$0.00	0.9	$ 1,640	0	$ 32	5	$ 95	4	$ 63
May	22,680	N/A	$0.00	0.9	$ 1,996	0	$ 31	569	$ 96	5	$ 68
June	27,540	N/A	$0.00	0.9	$ 2,493	0	$ 30	0	$ 95	3	$ 47
July	35,100	N/A	$0.00	0.9	$ 3,414	0	$ 35	148	$ 96	4	$ 61
August	33,060	N/A	$0.00	0.9	$ 3,277	0	$ 35	303,139	$ 2,156	4	$ 54
September	24,600	N/A	$0.00	0.9	$ 2,751	0	$ 35	52,314	$ 421	4	$ 57
October	22,020	N/A	$0.00	0.9	$ 2,518	0	$ 35	139,906	$ 1,064	4	$ 62
November	12,600	N/A	$0.00	0.9	$ 1,538	0	$ 39	35	$ 100	4	$ 50
December	24,480	N/A	$0.00	0.9	$ 2,660	88	$ 92	7	$ 100	3	$ 43
Annual	271,680				$ 26,934	1,265	$ 1,319	497,623	$ 4,513	46	$ 664

	Electricity	Natual Gas	Water
Company Name:	City of San Marcos	CenterPoint Energy	City of San Marcos
Company Rate Schedule	Government Rate	Government Rate	General Services

* Certification: PE

Charges have been recomputed and are correct: _____

Signature and Title:

Note: For weather normalized baseline, follow commonly accepted protocols, US DOE IPMVP, or ASHRAE Guidelines 14P

Table 4: Base Year Utility Consumption

Bldg. ID: Juvenile Detention
Gross SF 43,222 Excludes Parking Garage
EUI: 96,700 Btu/SF
ECI: $ 2.17 Per SF

For prior 12 month period beginning January, 2015 and ending December, 2015

Reading Date	Electrical					Natural Gas		Irrigation		Water/Sewer	
Month	Consumption (kWh)	Demand Metered (kW or kVA)	Demand Charged (kW or kVA)	Power Factor	* Total Cost ($)	Consumption (CCF)	Cost ($)	Consumption (Kgal)	Cost ($)	Consumption (Kgal)	* Cost ($)
January	41,568	N/A	$0.00	0.9	$ 4,726	2,143	$ 1,622	0	$ -	182	$ 2,606
February	48,000	N/A	$0.00	0.9	$ 5,175	1,389	$ 1,039	0	$ -	185	$ 2,648
March	43,872	N/A	$0.00	0.9	$ 4,843	1,525	$ 1,137	0	$ -	212	$ 3,034
April	64,800	N/A	$0.00	0.9	$ 6,017	921	$ 700	0	$ -	268	$ 3,828
May	69,024	N/A	$0.00	0.9	$ 7,544	964	$ 730	0	$ -	194	$ 2,777
June	79,488	N/A	$0.00	0.9	$ 8,245	817	$ 623	0	$ -	219	$ 3,129
July	93,312	N/A	$0.00	0.9	$ 9,569	810	$ 622	0	$ -	232	$ 3,318
August	104,736	N/A	$0.00	0.9	$ 10,708	829	$ 571	0	$ -	204	$ 2,911
September	86,304	N/A	$0.00	0.9	$ 8,959	868	$ 597	0	$ -	210	$ 2,998
October	82,176	N/A	$0.00	0.9	$ 8,098	816	$ 563	0	$ -	197	$ 2,816
November	56,160	N/A	$0.00	0.9	$ 5,392	1,172	$ 793	0	$ -	177	$ 2,524
December	46,176	N/A	$0.00	0.9	$ 4,480	1,439	$ 966	0	$ -	215	$ 3,071
Annual	815,616				$ 83,756	13,693	$ 9,963	0	$ -	2,497	$ 35,659

	Electricity	Natural Gas	Water
Company Name:	Bluebonnet	CenterPoint Energy	City of San Marcos
Company Rate Schedule	Government Rate	Government Rate	General Services

* Certification: PE

Charges have been recomputed and are correct: _____

Signature and Title:

Note: For weather normalized baseline, follow commonly accepted protocols, US DOE IPMVP, or ASHRAE Guidelines 14P

This document contains Performance Services Trade Secrets and Confidential information to be used by the addressee for evaluating the PSI proposal. Addressee shall not disclose the Confidential information to third parties without written consent of Performance Services.

Table 4: Base Year Utility Consumption

Bldg. ID: Development Services
Gross SF 14,058
EUI: 50,047 Btu/SF
ECI: $ 1.31 Per SF

For prior 12 month period beginning January, 2015 and ending December, 2015

Reading Date	Electrical							Natual Gas		Water/Sewer	
Month	Consumption (kWh)	Demand Metered (kW or kVA)	Demand Charged (kW or kVA)	Power Factor	Fuel Adjustment ($/kWh)	Power Factor Penalty	* Total Cost ($)	Consumption (CCF)	Cost ($)	Consumption (Kgal)	* Cost ($)
January	15,880	N/A	$0.00	0.9	N/A	N/A	$ 1,532	0	$ -	7	$ 94
February	15,080	N/A	$0.00	0.9	N/A	N/A	$ 1,396	0	$ -	7	$ 93
March	12,440	N/A	$0.00	0.9	N/A	N/A	$ 1,158	0	$ -	6	$ 83
April	15,160	N/A	$0.00	0.9	N/A	N/A	$ 1,365	0	$ -	8	$ 112
May	15,920	N/A	$0.00	0.9	N/A	N/A	$ 1,432	0	$ -	6	$ 92
June	20,880	N/A	$0.00	0.9	N/A	N/A	$ 1,866	0	$ -	8	$ 117
July	21,360	N/A	$0.00	0.9	N/A	N/A	$ 1,908	0	$ -	6	$ 92
August	21,760	N/A	$0.00	0.9	N/A	N/A	$ 1,943	0	$ -	8	$ 112
September	20,800	N/A	$0.00	0.9	N/A	N/A	$ 1,859	0	$ -	8	$ 113
October	17,240	N/A	$0.00	0.9	N/A	N/A	$ 1,548	0	$ -	7	$ 97
November	15,000	N/A	$0.00	0.9	N/A	N/A	$ 1,207	0	$ -	7	$ 93
December	14,680	N/A	$0.00	0.9	N/A	N/A	$ 1,265	0	$ -	7	$ 98
Annual	206,200					$0	$ 18,480	0	$ -	84	$ 1,198

	Electricity	Natural Gas	Water
Company Name:	Pedernales Electric		City of San Marcos
Company Rate Schedule	Government Rate	Government Rate	General Services

* Certification: PE

Charges have been recomputed and are correct: _____

Signature and Title:

Note: For weather normalized baseline, follow commonly accepted protocols, US DOE IPMVP, or ASHRAE Guidelines 14P

Table 4: Base Year Utility Consumption

Bldg. ID: Health Department
Gross SF 13,327 Excludes Parking Garage
EUI: 62,556 Btu/SF
ECI: $ 1.91 Per SF

For prior 12 month period beginning January, 2015 and ending December, 2015

Reading Date	Electrical							Natual Gas		Water/Sewer	
Month	Consumption (kWh)	Demand Metered (kW or kVA)	Demand Charged (kW or kVA)	Power Factor	Fuel Adjustment ($/kWh)	Power Factor Penalty	* Total Cost ($)	Consumption (CCF)	Cost ($)	Consumption (Kgal)	* Cost ($)
January	22,916	N/A	$0.00	0.9	N/A	N/A	$ 2,515.84	0	$ -	7	$ 94
February	20,414	N/A	$0.00	0.9	N/A	N/A	$ 2,293.39	0	$ -	7	$ 93
March	15,203	N/A	$0.00	0.9	N/A	N/A	$ 1,882.29	0	$ -	6	$ 83
April	17,911	N/A	$0.00	0.9	N/A	N/A	$ 2,018.61	0	$ -	8	$ 112
May	17,875	N/A	$0.00	0.9	N/A	N/A	$ 1,968.60	0	$ -	6	$ 92
June	22,733	N/A	$0.00	0.9	N/A	N/A	$ 2,327.86	0	$ -	8	$ 117
July	26,625	N/A	$0.00	0.9	N/A	N/A	$ 2,782.56	0	$ -	6	$ 92
August	25,271	N/A	$0.00	0.9	N/A	N/A	$ 2,434.56	0	$ -	8	$ 112
September	22,885	N/A	$0.00	0.9	N/A	N/A	$ 2,268.94	0	$ -	8	$ 113
October	18,005	N/A	$0.00	0.9	N/A	N/A	$ 1,669.54	0	$ -	7	$ 97
November	14,180	N/A	$0.00	0.9	N/A	N/A	$ 1,448.91	0	$ -	7	$ 93
December	20,320	N/A	$0.00	0.9	N/A	N/A	$ 1,880.11	0	$ -	7	$ 98
Annual	244,338					$0	$ 25,491	0	$ -	84	$ 1,198

	Electricity	Natural Gas	Water
Company Name:	City of San Marcos		City of San Marcos
Company Rate Schedule	Government Rate	Government Rate	General Services

* Certification: PE

Charges have been recomputed and are correct: _____

Signature and Title:

Note: For weather normalized baseline, follow commonly accepted protocols, US DOE IPMVP, or ASHRAE Guidelines 14P

This document contains Performance Services Trade Secrets and Confidential information to be used by the addressee for evaluating the PSI proposal. Addressee shall not disclose the Confidential information to third parties without written consent of Performance Services.

Table 4: Base Year Utility Consumption

Bldg. ID: Precinct 2
Gross SF 14,174
EUI: 37,128 Btu/SF
ECI: $ 1.02 Per SF

For prior 12 month period beginning January, 2015 and ending December, 2015

Reading Date	Electrical							Natual Gas		Water/Sewer	
Month	Consumption (kWh)	Demand Metered (kW or kVA)	Demand Charged (kW or kVA)	Power Factor	Fuel Adjustment ($/kWh)	Power Factor Penalty	* Total Cost ($)	Consumption (CCF)	Cost ($)	Consumption (Kgal)	* Cost ($)
January	27,160	N/A	$0.00	0.9	N/A	N/A	$ 2,630	0	$ -	4	$ 244
February	19,076	N/A	$0.00	0.9	N/A	N/A	$ 1,870	0	$ -	4	$ 243
March	6,973	N/A	$0.00	0.9	N/A	N/A	$ 703	0	$ -	4	$ 243
April	8,419	N/A	$0.00	0.9	N/A	N/A	$ 812	0	$ -	4	$ 244
May	9,640	N/A	$0.00	0.9	N/A	N/A	$ 919	0	$ -	12	$ 284
June	10,926	N/A	$0.00	0.9	N/A	N/A	$ 1,032	0	$ -	4	$ 242
July	11,936	N/A	$0.00	0.9	N/A	N/A	$ 1,120	0	$ -	4	$ 243
August	11,449	N/A	$0.00	0.9	N/A	N/A	$ 1,078	0	$ -	4	$ 243
September	11,134	N/A	$0.00	0.9	N/A	N/A	$ 963	0	$ -	4	$ 242
October	6,671	N/A	$0.00	0.9	N/A	N/A	$ 659	0	$ -	5	$ 245
November	11,238	N/A	$0.00	0.9	N/A	N/A	$ 951	0	$ -	4	$ 244
December	19,612	N/A	$0.00	0.9	N/A	N/A	$ 1,714	0	$ -	4	$ 243
Annual	154,234						$ 14,453	0	$ -	56	$ 2,960

	Electricity	Natural Gas	Water
Company Name:	Pedernales Electric		Aqua Texas
Company Rate Schedule	Government Rate	Government Rate	General Services

* Certification: PE

Charges have been recomputed and are correct:

_____

Signature and Title:

Note: For weather normalized baseline, follow commonly accepted protocols, US DOE IPMVP, or ASHRAE Guidelines 14P

Table 4: Base Year Utility Consumption

Bldg. ID: Precinct 4
Gross SF 6,272
EUI: 55,271 Btu/SF
ECI: $ 1.59 Per SF

For prior 12 month period beginning January, 2015 and ending December, 2015

Reading Date	Electrical							Natual Gas		Water/Sewer	
Month	Consumption (kWh)	Demand Metered (kW or kVA)	Demand Charged (kW or kVA)	Power Factor	Fuel Adjustment ($/kWh)	Power Factor Penalty	* Total Cost ($)	Consumption (CCF)	Cost ($)	Consumption (Kgal)	* Cost ($)
January	9,760	N/A	$0.00	0.9	N/A	N/A	$ 1,005	0	$ -	3	$ 10
February	7,560	N/A	$0.00	0.9	N/A	N/A	$ 787	0	$ -	3	$ 9
March	9,520	N/A	$0.00	0.9	N/A	N/A	$ 943	0	$ -	6	$ 18
April	6,880	N/A	$0.00	0.9	N/A	N/A	$ 692	0	$ -	4	$ 11
May	7,520	N/A	$0.00	0.9	N/A	N/A	$ 734	0	$ -	4	$ 11
June	8,960	N/A	$0.00	0.9	N/A	N/A	$ 867	0	$ -	6	$ 19
July	9,960	N/A	$0.00	0.9	N/A	N/A	$ 960	0	$ -	5	$ 14
August	10,840	N/A	$0.00	0.9	N/A	N/A	$ 1,041	0	$ -	5	$ 14
September	8,480	N/A	$0.00	0.9	N/A	N/A	$ 820	0	$ -	16	$ 49
October	9,120	N/A	$0.00	0.9	N/A	N/A	$ 882	0	$ -	8	$ 24
November	6,880	N/A	$0.00	0.9	N/A	N/A	$ 675	0	$ -	5	$ 14
December	6,120	N/A	$0.00	0.9	N/A	N/A	$ 545	0	$ -	11	$ 33
Annual	101,600						$ 9,949	0	$ -	75	$ 225

	Electricity	Natural Gas	Water
Company Name:	Pedernales Electric		City of Dripping Springs
Company Rate Schedule	Government Rate	Government Rate	General Services

* Certification: PE

Charges have been recomputed and are correct:

_____

Signature and Title:

Note: For weather normalized baseline, follow commonly accepted protocols, US DOE IPMVP, or ASHRAE Guidelines 14P

This document contains Performance Services Trade Secrets and Confidential information to be used by the addressee for evaluating the PSI proposal. Addressee shall not disclose the Confidential information to third parties without written consent of Performance Services.

Table 4: Base Year Utility Consumption

Bldg. ID: Jacobs Well Natural Center
Gross SF 2,400
EUI: 27,012 Btu/SF
ECI: $ 0.89 Per SF

For prior 12 month period beginning January, 2015 and ending December, 2015

Reading Date	Electrical							Natual Gas		Water/Sewer	
Month	Consumption (kWh)	Demand Metered (kW or kVA)	Demand Charged (kW or kVA)	Power Factor	Fuel Adjustment ($/kWh)	Power Factor Penalty	* Total Cost ($)	Consumption (CCF)	Cost ($)	Consumption (Kgal)	* Cost ($)
January	2,900	N/A	$0.00	0.9	N/A	N/A	$ 310	0	$ -	17	$ 50
February	1,740	N/A	$0.00	0.9	N/A	N/A	$ 201	0	$ -	15	$ 43
March	1,840	N/A	$0.00	0.9	N/A	N/A	$ 203	0	$ -	12	$ 35
April	580	N/A	$0.00	0.9	N/A	N/A	$ 90	0	$ -	8	$ 24
May	1,100	N/A	$0.00	0.9	N/A	N/A	$ 134	0	$ -	9	$ 25
June	1,480	N/A	$0.00	0.9	N/A	N/A	$ 167	0	$ -	8	$ 23
July	2,080	N/A	$0.00	0.9	N/A	N/A	$ 220	0	$ -	8	$ 22
August	2,120	N/A	$0.00	0.9	N/A	N/A	$ 223	0	$ -	7	$ 19
September	1,820	N/A	$0.00	0.9	N/A	N/A	$ 197	0	$ -	7	$ 19
October	1,320	N/A	$0.00	0.9	N/A	N/A	$ 153	0	$ -	6	$ 17
November	560	N/A	$0.00	0.9	N/A	N/A	$ 87	0	$ -	8	$ 23
December	1,460	N/A	$0.00	0.9	N/A	N/A	$ 151	0	$ -	9	$ 27
Annual	19,000						$ 2,136	0	$ -	115	$ 327

	Electricity	Natural Gas	Water
Company Name:	Pedernales Electric		Aqua Texas
Company Rate Schedule	Government Rate	Government Rate	General Services

* Certification: PE

Charges have been recomputed and are correct: _____

Signature and Title:

Note: For weather normalized baseline, follow commonly accepted protocols, US DOE IPMVP, or ASHRAE Guidelines 14P

Table 4: Base Year Utility Consumption

Bldg. ID: Jail
Gross SF 83,306
EUI: 160,565 Btu/SF
ECI: $ 2.56 Per SF

For prior 12 month period beginning January, 2015 and ending December, 2015

Reading Date	Electrical							Natual Gas		Water/Sewer	
Month	Consumption (kWh)	Demand Metered (kW or kVA)	Demand Charged (kW or kVA)	Power Factor	Fuel Adjustment ($/kWh)	Power Factor Penalty	* Total Cost ($)	Consumption (MCF)	Cost ($)	Consumption (Kgal)	* Cost ($)
January	129,120	N/A	$0.00	0.9	N/A	N/A	$ 13,701	261	$ 1,876	1,339	$18,739
February	128,160	N/A	$0.00	0.9	N/A	N/A	$ 13,134	277	$ 1,981	1,237	$17,321
March	124,320	N/A	$0.00	0.9	N/A	N/A	$ 13,146	296	$ 2,106	1,292	$18,080
April	172,320	N/A	$0.00	0.9	N/A	N/A	$ 19,095	279	$ 1,995	1,476	$20,642
May	154,560	N/A	$0.00	0.9	N/A	N/A	$ 16,280	314	$ 2,224	1,348	$18,866
June	178,560	N/A	$0.00	0.9	N/A	N/A	$ 17,879	291	$ 2,072	1,381	$19,436
July	204,960	N/A	$0.00	0.9	N/A	N/A	$ 19,208	259	$ 1,688	1,565	$21,989
August	204,000	N/A	$0.00	0.9	N/A	N/A	$ 19,931	227	$ 1,502	1,503	$21,130
September	198,240	N/A	$0.00	0.9	N/A	N/A	$ 17,559	220	$ 1,461	1,511	$21,880
October	184,320	N/A	$0.00	0.9	N/A	N/A	$ 16,838	225	$ 1,490	1,669	$24,131
November	160,800	N/A	$0.00	0.9	N/A	N/A	$ 13,114	1,711	$ 1,218	1,821	$26,305
December	142,560	N/A	$0.00	0.9	N/A	N/A	$ 12,403	2,124	$ 1,461	1,358	$19,691
Annual	1,981,920						$ 192,287	6,484	$ 21,073	17,500	$ 248,210

	Electricity	Natural Gas	Water
Company Name:	City of San Marcos	CenterPoint Energy	City of San Marcos
Company Rate Schedule	Government Rate	Government Rate	General Services

* Certification: PE

Charges have been recomputed and are correct: _____

Signature and Title:

Note: For weather normalized baseline, follow commonly accepted protocols, US DOE IPMVP, or ASHRAE Guidelines 14P

This document contains Performance Services Trade Secrets and Confidential information to be used by the addressee for evaluating the PSI proposal. Addressee shall not disclose the Confidential information to third parties without written consent of Performance Services.

IV. UTILITY RATE SCHEDULE ANALYSES

A. ELECTRIC RATE SCHEDULE ANALYSIS

Hays County has buildings located in various cities with buildings served by different utilities companies. The following is a description of current electrical charges by utility and building.

NAME OF UTILITY: City of San Marcos

RATE SCHEDULE ANALYZED: Commercial

SUMMARY OF BILLING COMPONENT CHARGES:

Electric Charges

Energy Charge:	$0.077258	per kWh
Demand Charge:	$3.44	per kW

NAME OF UTILITY: City of San Marcos

RATE SCHEDULE ANALYZED: Small Commercial

SUMMARY OF BILLING COMPONENT CHARGES:

Electric Charges

Energy Charge:	$0.077258	per kWh
Demand Charge:	$3.61	per kW

NAME OF UTILITY: Bluebonnet

RATE SCHEDULE ANALYZED: Commercial

SUMMARY OF BILLING COMPONENT CHARGES:

Electric Charges

Energy Charge:	$0.07650	per kWh
Demand Charge:	$4.50	per kW

NAME OF UTILITY: Pedernales Electric

RATE SCHEDULE ANALYZED: Large Power

SUMMARY OF BILLING COMPONENT CHARGES:

Electric Charges

DRAFT

This document contains Performance Services Trade Secrets and Confidential information to be used by the addressee for evaluating the PSI proposal. Addressee shall not disclose the Confidential information to third parties without written consent of Performance Services.

Energy Charge:	$0.06893	per kWh
Demand Charge:	$3.38	per kW

NAME OF UTILITY: Pedernales Electric

RATE SCHEDULE ANALYZED: Small Power

SUMMARY OF BILLING COMPONENT CHARGES:

Electric Charges

Energy Charge:	$0.08109	per kWh
Demand Charge:	$0.00	per kW

AVOIDED COST OF ENERGY AND DEMEAND TO BE USED IN CALCULATIONS:

Electric rate components are based on energy (kWh) and also on demand (kW). For electrical avoided cost of energy, Performance Services is using the rates as defined in the rate structures above and summarized below.

Electric Rate for Gov. Center & Jail

Season	Cost per kW	Cost per kWh
Year Around	$3.44	$0.07726

Electric Rate for Juvenile Detention

Season	Cost per kW	Cost per kWh
Year Around	$4.50	$0.07650

Electric Rate for Court House & Health Department

Season	Cost per kW	Cost per kWh
Year Around	$3.61	$0.07726

Electric Rate for Precinct 2

Season	Cost per kW	Cost per kWh
Year Around	$3.38	$0.06893

Electric Rate for Development Services, Precinct 4 & Jacobs Well

Season	Cost per kW	Cost per kWh
Year Around	$0.00	$0.08109

The utilities do not currently charge Hays County for low power factor fees. As such, power factor fee savings have not been included as avoided costs used in the project savings analysis.

This document contains Performance Services Trade Secrets and Confidential information to be used by the addressee for evaluating the PSI proposal. Addressee shall not disclose the Confidential information to third parties without written consent of Performance Services.

COMMENTS:

For future rate escalation purposes, Performance Services is using 2 percent per year for electricity.

B. GAS UTILITY RATE SCHEDULE ANALYSIS

NAME OF UTILITY: CENTERPOINT ENERGY

RATE SCHEDULE ANALYZED: Hays County MARKET RATE PLAN

CENTERPOINT ENERGY RATE
The "rate plan" for natural gas supplied to Hays County buildings is comprised of three components in addition to taxes: Storage Inventory Charge; Base Charge; and the Gas Cost Adjustment Charge. All charges are consumption dependent and the Gas Cost Adjustment charge is determined based on market prices. The Gas Cost Adjustment charge in the largest component of the overall natural gas rate.

AVOIDED COST OF ENERGY TO BE USED IN CALCULATIONS:

Since Hays County pays the same rate for natural gas at each of the project buildings, PSI has calculated the weighted average price paid for retail natural gas by Hays County during calendar year 2015 (January through June) excluding the flat service charges such as the Texas Gas Service Customer Charge. Natural gas rates used in this report by building follow:

Building	Cost/CCF of NG
Government Center	$0.65
Court House	$0.65
Juvenile Detention	$0.65
Development Services	NA
Health Department	NA
Precinct 2	NA
Precinct 4	NA
Jacobs Well Natural Center	NA
Jail	$0.65

Note that natural gas costs comprise only 3.2 percentage of Hays County utility costs at these four sites.

This document contains Performance Services Trade Secrets and Confidential information to be used by the addressee for evaluating the PSI proposal. Addressee shall not disclose the Confidential information to third parties without written consent of Performance Services.

C. WATER AND WASTEWATER UTILITY RATE SCHEDULE ANALYSIS

NAME OF UTILITY: City of San Marcos Water Utility

RATE SCHEDULE ANALYZED: 2016 COMMERCIAL RATE SCHEDULE

SUMMARY OF BILLING COMPONENT CHARGES:

2016 water volume rates for the City of San Marcos are shown in the table below. The applicable rate for the Facilities is $7.35 per 1,000 gallons

.

CITY OF SAN MARCOS 2016 WATER RATES FOR COMMERCIAL CUSTOMERS

Rate Type	Water Volumes (kgal)	Water Rate ($/1,000 gal)
W	0 - 13,000	$2.16
W	13,000 - 25,000	$6.49
W	> 25,000	$7.35

2015 wastewater volume rates for the City of Austin are shown below (Table 3). The applicable rate for the Facility is $8.82 per 1,000 gallons. Only water discharged to the sanitary sewer is subject to the wastewater charge.

CITY OF SAN MARCOS 2015 WASTEWATER RATES FOR COMMERCIAL CUSTOMERS

Rate Type	Sewer Volumes (kgal)	Sewer Rate ($/1,000 gal)
W	All	$6.93

AVOIDED COST OF WATER TO BE USED IN CALCULATIONS:

Building		Cost per Unit	
Name	Gross sq. ft.	Sewer (kgal)	Water (kgal)
Government Center	236,000	$6.93	$7.35
Jail	83,306	$6.93	$7.35

DRAFT

This document contains Performance Services Trade Secrets and Confidential information to be used by the addressee for evaluating the PSI proposal. Addressee shall not disclose the Confidential information to third parties without written consent of Performance Services.

V. TECHNICAL ANALYSIS

A UTILITY COST REDUCTION MEASURES

Table 5-1 identifies Utility Cost Reduction Measures (UCRM) that can be economically implemented as part of this guaranteed savings project for Hays County. These UCRMs provide a reduction in consumption while also addressing Hays County's need for necessary infrastructure improvements.

Table 5-1: Utility Cost Reduction Measures

Measure Type	Utility Cost Reduction Measure
Electrical	LED Lighting
	Power Conditioning
	Demand Response
Renewable Energy	Solar Photovoltaics
Mechanical	Server Room Cooling Improvements
	New HVAC Equipment
Building Envelope	Window Restoration/Film
Controls	New Building Automation System
	Retro-Cx with Tridium Front End
Water	Water Controls & Piping

In addition to the savings associated with reduced energy consumption, Hays County will also expect to realize other important benefits, including:

- New standby generators at Jail and Development Services
- Adding Jail HVAC onto emergency power
- Replacement of failing HVAC equipment
- Water controls in Jail
- Renewable energy
- Improved lighting
- Improved comfort
- Improve control of space temperatures
- Reduced electrical system harmonics and less electrical surges

Project scope of work specifics follow:

This document contains Performance Services Trade Secrets and Confidential information to be used by the addressee for evaluating the PSI proposal. Addressee shall not disclose the Confidential information to third parties without written consent of Performance Services.

UCRM NO.: 1

UCRM NAME: LED Lighting (Partial QECB Funded UCRM)

SUMMARY DATA

All projects are analyzed in the dependent mode and in the following sequence:
Building loads, distribution systems, primary equipment, and utility management systems. All recommended UCRMs are assumed to be installed for dependency purposes.

kWh Savings	1,190,455	kWh/Year
Natural Gas Savings	0	Therms/Year
Water Savings	0	kgal/Year
Cost Savings	$142,711	Per Year
Implementation Cost	$1,062,712	
Simple Payback Period	7.4	Years
Est. Useful Life	20	Years

UCRM Description:

The dominant lighting system within these buildings is T-8 linear fluorescent. Within the jail, Hays County staff is slowly replacing the T-12 fluorescent lighting with T-8 fluorescent lighting as lamps and ballasts fail. The drawbacks to the existing lighting systems within the project buildings follow:

- T-12 lamps and ballasts are at or beyond end of useful life
- Fluorescent lighting systems are becoming obsolete
- Limited replacement parts in the future
- High lighting O&M costs
- Relatively short lamp life

To address these issues, this measure considers replacement of the fluorescent, incandescent and HID lighting with LED lighting. Benefits include:

- High efficacy, low energy usage
- 50,000+ hour lamp life
- Ten year warranty on linear products and new fixtures
- Improved illumination levels
- Improved lighting controls to reduce operational hours

This measure also includes converting and/or replacing exterior fixtures with LED fixtures.

This document contains Performance Services Trade Secrets and Confidential information to be used by the addressee for evaluating the PSI proposal. Addressee shall not disclose the Confidential information to third parties without written consent of Performance Services.

A detailed scope of work for this measure follows:

- Retrofit and/or replace 3,461 fixtures at Government Center
- Install approximately 21 occupancy sensors at Government Center
- Retrofit and/or replace 115 fixtures at Precinct 4
- Install approximately 0 occupancy sensors at Precinct 4
- Retrofit and/or replace 12 fixtures at Jacobs Well Nature Center
- Install approximately 0 occupancy sensors at Jacobs Well Nature Center

Qualified Energy Conservation Bond (QECB) funded portion of lighting scope:

- Retrofit and/or replace 324 fixtures at Court House
- Install approximately 0 occupancy sensors at Court House
- Retrofit and/or replace 515 fixtures at Juvenile Detention
- Install approximately 1 occupancy sensors at Juvenile Detention
- Retrofit and/or replace 277 fixtures at Development Services
- Install approximately 9 occupancy sensors at Development Services
- Retrofit and/or replace 162 fixtures at Health Department
- Install approximately 0 occupancy sensors at Health Department
- Retrofit and/or replace 289 fixtures at Precinct 2
- Install approximately 1 occupancy sensors at Precinct 2
- Retrofit and/or replace 15 fixtures at Jacobs Well Nature Center
- Install approximately 0 occupancy sensors at Jacobs Well Nature Center
- Retrofit and/or replace 1552 fixtures at the Jail
- Install approximately 0 occupancy sensors at the Jail
- Provide one percent spare lamps and/or drivers
- All material made obsolete during this work will be disposed of according to state and local requirements.

Savings were calculated using manufacturer data and spreadsheet calculations. Savings include lamp and ballast material only maintenance savings which are consistent with actual costs. Hours of operation are based on ANSI data for these building types and were fine-tuned by using operational loggers. Lighting documentation including saving calculations are included in the Appendix. Linear LED lamps, drivers and new fixtures will have a 10 year manufacturer's warranty.

DRAFT

This document contains Performance Services Trade Secrets and Confidential information to be used by the addressee for evaluating the PSI proposal. Addressee shall not disclose the Confidential information to third parties without written consent of Performance Services.

UCRM NO.: 2

UCRM NAME: Power Conditioning

SUMMARY DATA

All projects are analyzed in the dependent mode and in the following sequence:
Building loads, distribution systems, primary equipment, and utility management systems. All recommended UCRMs are assumed to be installed for dependency purposes.

kWh Savings	185,335	kWh/Year
Natural Gas Savings	0	Therms/Year
Water Savings	0	kgal/Year
Cost Savings	$15,207	Per Year
Implementation Cost	$179,200	
Simple Payback Period	11.8	Years
Est. Useful Life	20	Years

UCRM Description: Power quality issues can typically be summarized as follows:

Poor Power Factor caused by the inductive loads such as: electric motors, transformers, compact fluorescent lighting and high intensity discharge lighting. Inductive loads increase the amount of energy required by your electrical equipment to work properly, which in turn creates excess heat that reduces the efficiency and longevity of electrical equipment. Note that these devices will not cause the buildings to go into a lead power factor condition.

Harmonic Interference is caused by non-linear loads such as computers, fax machines, copiers, medical devices and variable frequency drives. Non-linear loads create heat that increases energy usage and damages electrical equipment causing an increase in repair, maintenance, and replacement costs.

Transient Surges & Spikes are caused by turning equipment on and off, lighting, utility grid changes, and back-up power supplies. These conditions attack electrical equipment and also cause increased repair, maintenance, and equipment costs.

To address these issues, this measure considers installation of a total of approximately 19 power conditioners with modular capacitance (where applicable) to improve power factor making your motor load run cooler and more efficiently. This results in a reduction in energy consumption and an extension of the useful life of your motor load. The Power Conditioning System will also provide harmonic filtration to mitigate harmonic distortion and recycle waste energy resulting in reduced energy consumption which prolongs the longevity of electrical equipment.

This document contains Performance Services Trade Secrets and Confidential information to be used by the addressee for evaluating the PSI proposal. Addressee shall not disclose the Confidential information to third parties without written consent of Performance Services.

Lastly, the Power Conditioning System with its industrial grade metal oxide varistors (MOVs) protects electrical equipment from transient electrical equipment.

A detailed scope of work for this measure follows:

- Installation of approximately 6 power conditioning panels at Hay's County Government Center
- Installation of approximately 3 power conditioning panels at Hay's County Juvenile Detention
- Installation of approximately 3 power conditioning panels at Hay's County Jail
- Installation of 1 power conditioning panel at each of the following buildings: Court House, Development Services, Health Department, Precinct 2, Precinct 3, Precinct 4, Jacob's Well Nature Center

Note that the Power Conditioners will be connected in parallel with the electrical system and will be installed at or near primary electrical loads within buildings, i.e. Chillers, data centers, large motors, etc. The Power Conditioners will not affect the operation of the electrical system. In the event of a significant surge or spike, the equipment will provide addition protect to electrical equipment.

Savings were calculated using a harmonic reduction spreadsheet calculator. Savings calculations were also performed by the manufacturer's representative.

DRAFT

This document contains Performance Services Trade Secrets and Confidential information to be used by the addressee for evaluating the PSI proposal. Addressee shall not disclose the Confidential information to third parties without written consent of Performance Services.

UCRM NO.: 3

UCRM NAME: Solar PV

SUMMARY DATA

All projects are analyzed in the dependent mode and in the following sequence:
Building loads, distribution systems, primary equipment, and utility management systems. All recommended UCRMs are assumed to be installed for dependency purposes.

kWh Savings	987,790	kWh/Year
Natural Gas Savings	0	Therms/Year
Water Savings	0	kgal/Year
Cost Savings	$87,965	Per Year
Implementation Cost	$1,522,893	
Simple Payback Period	17.3	Years
Est. Useful Life	25	Years

UCRM Description:
Hays County Government Center and Jail are both excellent candidates for solar power due to the large amounts of space, minimal shading and relatively high electric rates.

This measure includes installing an approximately 475 kW dc photovoltaic solar array on the roof of the Government Center and an approximately 210 kW dc photovoltaic solar array on the ground adjacent to the Jail. These sites have been selected for the following reasons:

- Large open ground spaces adjacent to buildings that can facilitate entire photovoltaic array or large open roof space
- "All-In" electric rate of approximately $0.095 per kWh

Electrical generation with Photovoltaic (PV) Solar Energy for a secondary power supply on a facility is a proven energy saving strategy.

PV System's Specifications

The following a summary of the solar PV system considered for this project:

- Size: 685 kW dc (nominal)
- Installation Location: On the roof of the Government Center and on the ground adjacent to the Jail. These systems will cover approximately 85,000 square feet and consist of approximately 2,045 modules.

This document contains Performance Services Trade Secrets and Confidential information to be used by the addressee for evaluating the PSI proposal. Addressee shall not disclose the Confidential information to third parties without written consent of Performance Services.

- Modules: 335 or 325 watt poly crystalline modules that are UL and CEC listed and shall have a minimum of 16% efficiency
- Inverters: Four or more inverters having a minimum 96% CDC weighted efficiency
- Roof Mounting: Ballasted racking designed for 90 mph wind installed over roof separator sheet. Pricing based on roof not having to be structurally reinforced.
- Ground Mounting:
- Solar array output to be submetered
- Modules will come with a 25 year production guarantee of no more than 20% degradation by year 25
- Modules, inverters and ballasted racking shall have 10 year warranties

The annual renewable energy production is estimated at 1,081,680 kWh. Below is a sample graph showing a monthly energy production profile.

Sample Annual PV Energy Production (kWh)

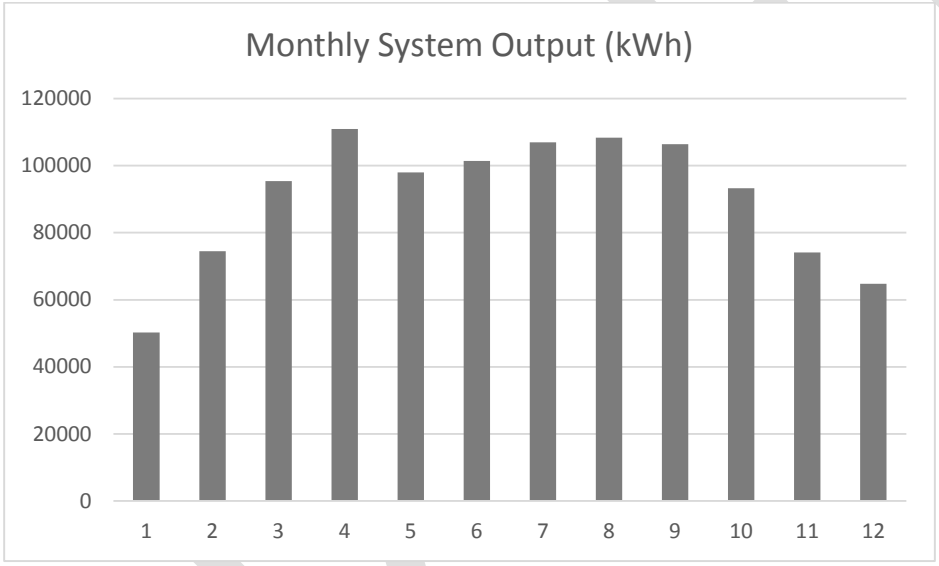

Another bi-product of the PV system is the environmental benefits. **For example, a 685 kW dc PV system will offset 775 tons of carbon dioxide emissions per year. The amount of energy that the PV system will produce, could power 104 average American homes.**

Annual energy production/savings was calculated using the National Renewable Energy Laboratory's PVWatts and HelioScope from Folsom Labs.

This document contains Performance Services Trade Secrets and Confidential information to be used by the addressee for evaluating the PSI proposal. Addressee shall not disclose the Confidential information to third parties without written consent of Performance Services.

UCRM NO.: 4

UCRM NAME: Demand Response (QECB Funded UCRM)

SUMMARY DATA

All projects are analyzed in the dependent mode and in the following sequence:
Building loads, distribution systems, primary equipment, and utility management systems. All recommended UCRMs are assumed to be installed for dependency purposes.

kWh Savings	0	kWh/Year
Natural Gas Savings	0	Therms/Year
Water Savings	0	kgal/Year
Cost Savings	$27,450	Per Year
Implementation Cost	$663,415	
Simple Payback Period	24.2	Years
Est. Useful Life	20	Years

UCRM Description:
Where most energy savings programs focus on saving amount of energy used, demand response focuses on reducing grid load. Utility companies must either provide instantaneous power for any load on the grid by increasing capacity at a large upfront cost or sustain blackouts for customers whenever load exceeds capacity. Utilities and regulators have systems in place to reward power users for reducing their peak load during high demand times.

ERCOT in cooperation with utilities throughout Texas offers a demand response program that allows customers to be paid an incentive of being willing and able to reducing electrical load during peak load periods. Program participants receive notice before each use reduction, or curtailment, event. The qualified scheduling entity (QSE)/ERCOT will deliver event start and stop times to you via email, text message, or both, depending on your preference.

Although curtailment events are rare, they can occur any time of the day or year. Note that Hay's County will be paid for program participation whether or not a curtailment event occurs.

Simple participation strategies include:

- Demonstrate demand response capacity once a year
- Sign up with ERCOT through QSE in four month increments
- During a curtailment event, reduce building demand within 10 or 30 minutes from time of call by using standby generator to pick up building load
- Run standby generators until curtailment event is over

This document contains Performance Services Trade Secrets and Confidential information to be used by the addressee for evaluating the PSI proposal. Addressee shall not disclose the Confidential information to third parties without written consent of Performance Services.

The following is a summary of the scope of this measure:

- Add remote start/stop controls and notification to 750 kW standby generator at Government Center and an automatic transfer switch to power additional building load
- Add remote start/stop controls and notification to 125 kW standby generator at Juvenile Detention
- Replace existing 600 kW standby generator at Jail with a new 600 kW standby generator with remote start/stop controls and notification. Scope to include new automatic transfer switch and distribution panel which will allow the new generator to power building HVAC loads as well as life safety loads
- Install new 100 kW standby generator at Development Services with remote start/stop controls and notification. New generator to power office building and diesel pumps.
- Train staff on ERS demand response process

DRAFT

This document contains Performance Services Trade Secrets and Confidential information to be used by the addressee for evaluating the PSI proposal. Addressee shall not disclose the Confidential information to third parties without written consent of Performance Services.

UCRM NO.: 5

UCRM NAME: Retro-commissioning and Building Automation System with Tridium Front End

SUMMARY DATA

All projects are analyzed in the dependent mode and in the following sequence:
Building loads, distribution systems, primary equipment, and utility management systems. All recommended UCRMs are assumed to be installed for dependency purposes.

kWh Savings	587,793	kWh/Year
Natural Gas Savings	0	Therms/Year
Water Savings	0	kgal/Year
Cost Savings	$47,056	Per Year
Implementation Cost	$868,835	
Simple Payback Period	18.5	Years
Est. Useful Life	20	Years

UCRM Description:

This UCRM proposes to implement a retro-commissioning program at the Government Center. This program will combine aspects of controls optimization, retro-commissioning, and new construction commissioning. The following standards of comfort and control strategies will be applied:

Cooling

Setpoint	Default Value
Occupied Cooling Setpoint	74°F (Except 3rd floor court rooms)
Occupied Cooling Setpoint	69°F (3rd floor court rooms)
Unoccupied Cooling Setpoint	90°F

Heating

Setpoint	Default Value
Occupied Heating Setpoint	70°F (Except 3rd floor court rooms)
Occupied Heating Setpoint	67°F (3rd floor court rooms)
Unoccupied Heating Setpoint	50°F

- Optimize use of natural gas heating
- Optimize use of outdoor air using CO2 sensors and occupancy schedule
- Reset minimum VAV box airflows from 40% to 20%
- Identify failed sensors and HVAC equipment

This document contains Performance Services Trade Secrets and Confidential information to be used by the addressee for evaluating the PSI proposal. Addressee shall not disclose the Confidential information to third parties without written consent of Performance Services.

Additionally, this measure includes replacing the existing JCI Metasys user interface with a new Tridium user interface. Project details follow:

1. Replace JCI NAE controllers with JACE controllers
2. Convert Metasys databases into a database that fits into the Tridium JACE FX platform by using your current DDL files
3. Create new web based user interface that will be accessible from iOS and Andriod devices as well as Apple computers and Windows based PCs
4. Integrate in other Hays County building automation systems being installed as part of this project
5. Replace approximately 40 temperature sensors with temperature sensors with system override buttons

HVAC Modifications

Currently the Hays County Government Center third-floor courtrooms must be set to 67 degrees Fahrenheit to maintain a comfortable temperature. Also in the Courthouse there are two units that are beyond their useful lives and two units in very confined spaces. To correct these issues new HVAC equipment would need to be installed.

In the Hays County Government Center third-floor we interviewed staff and found that the HVAC would not respond to increases in temperature based on full occupancy. Running multiple calculations we confirmed that if the spaces were full to capacity, space temperature would drift up into uncomfortable temperatures. To resolve this PSI will replace 18 VAV boxes with larger boxes, rebalance the third-floor and reset min/max airflow throughout the third-floor.

Energy savings calculations are documented in the appendix and additionally were calculated using engineering spreadsheet and checked using the latest version of eQuest (3.64). Prior to calculating savings, baseline models were constructed that provided statistically valid baseline matches.

Server Room Modifications

The Government Center IT Server room is served by three Data Aire split-systems which provide space cooling to the IT Server room. Although cooling capacity is sufficient the diffusers suppling the air and return grilles are designed to cool the space not the server racks. This creates hot and cold spots throughout the server room and requires the space to be over cooled.

By changing the diffusers and changing the current server racks with racks designed to provide laminar air-flow through the server's, hot spots will be reduced providing better server performance and safety for the county's valuable server capacity.

Three sets of racks will need to be changed at a time to provide continuous service for the County. The County will need to provide for disconnecting, moving and reconnecting all components in each rack.

This document contains Performance Services Trade Secrets and Confidential information to be used by the addressee for evaluating the PSI proposal. Addressee shall not disclose the Confidential information to third parties without written consent of Performance Services.

Lastly, this measure includes repairing of exterior refrigerant line insulation.

Training will be provided by PSI to County personnel to properly follow the requirements of using the new server racks.

Energy savings, albeit relatively small, will result from this design change. The primary purpose for making this design change is to minimize the risk of server overheating and downtime.

Building Automation System Description

The HVAC systems at the following buildings are controlled by stand-alone programmable thermostats:

Building Name	Address	HVAC Type	HVAC Controls
Court House	111 E. San Antonio St, San Marcos, TX 78666	4-Trane Split Systems, 3-Trane Package Units	Prog. T-Stat
Juvenile Detention	2220 Clovis Barker Road, San Marcos, TX 78666	RTUs	Prog. T-Stat
Development Services	2171 Yarrington Road, San Marcos, TX 78666	13-Trane Split Systems	Prog. T-Stat
Health Department	401-A Broadway, San Marcos, TX 78667	5-Trane Split Systems	Prog. T-Stat
Precinct 2	5458 FM 2770, Kyle, TX 78640	12-Trane Split Systems	Prog. T-Stat
Precinct 3	200 Stillwater Drive, Wimberley, TX 78676	2-Split Systems, 5 Rooftop Units	Prog. T-Stat
Precinct 4	195 Roger Hanks Parkway #3, Dripping Springs, TX 78620	4-Trane Split Systems	Prog. T-Stat
Jacobs Well Natural Center	830 Jacobs Well Road, Wimberley, TX 78676	1-Goodman Split System	Prog. T-Stat
Jail	1307 Uhland Road, San Marcus, TX 78666	30 RTUs	Prog. T-Stat

This measure replaces the existing obsolete thermostats, with a native BACnet, smart thermostats that function as a simplified building automation system (BAS). These smart thermostats will be integrated into a common Tridium user interface along with the BAS serving the Government Center. Native BACnet thermostats will be installed at the following buildings:

- Court House (Seven new stats and three averaging temperature sensors)
- Development Services (13 new stats)
- Health Department (Five new stats)
- Precinct 2 (12 new stats)

This document contains Performance Services Trade Secrets and Confidential information to be used by the addressee for evaluating the PSI proposal. Addressee shall not disclose the Confidential information to third parties without written consent of Performance Services.

- Precinct 3 (Seven new stats)
- Precinct 4 (Four new stats and two averaging temperature sensors)
- Jacob's Well Natural Center (One new stat)

At these sites, existing thermostats will be removed from the building except for server room thermostats. The new smart thermostats/BAS will provide for scheduling, trending, alarms and graphics of the equipment in the building. The scope of this upgrade includes the installation of smart thermostats for the equipment listed below:

- 41 Split systems 2.5 tons and larger
- Three Package rooftop units

The scope of this measure at the Hays County Jail includes replacing existing thermostats with a comprehensive, native BACnet BAS. This new BAS will have a Tridium user interface and will be integrated into a multiple building Tridium front end.

Energy savings will be realized through temperature set-point adjustments and optimized equipment operation according to occupancy and load conditions. The proposed BAS system will be capable of providing all commonly used energy conservation control strategies. The types of energy management and control sequences to be employed include:

OPTIMIZED MECHANICAL SYSTEM SCHEDULES

The air handling units are currently operating 24x7 to maintain the desired temperatures in each area. The new BAS will enable scheduling of equipment to reduce operating hours while still maintaining the building comfort during occupied times. Unoccupied times for each day will be identified by Hays County staff and trends will be utilized to ensure set points are achieved at the start of each occupied period.

SPACE TEMPERATURE SET-POINT SCHEDULING

The required space conditions in the buildings can be changed based on the occupancy schedule. During periods when the building is unoccupied, the set-points would be adjusted to a level so that desired space conditions can be recovered at the beginning of the next occupancy period. This ECM will work with the building management groups to clearly define both the occupancy schedules and space conditions that should be maintained for each building area. The BAS will maintain the set-points and schedules.

During unoccupied periods, the HVAC equipment will operate only when required to maintain conditions at the unoccupied set-point. Additionally, exhaust fans will only be operated during occupied periods.

Outside air ventilation will be eliminated during unoccupied periods. Optimum start routines will be used to delay the recovery period as long as possible based on outdoor air conditions and historical performance data.

This document contains Performance Services Trade Secrets and Confidential information to be used by the addressee for evaluating the PSI proposal. Addressee shall not disclose the Confidential information to third parties without written consent of Performance Services.

Cooling

Setpoint	Default Value
Occupied Cooling Setpoint	74°F
Unoccupied Cooling Setpoint	90°F

Heating

Setpoint	Default Value
Occupied Heating Setpoint	70°F
Unoccupied Heating Setpoint	50°F

Comprehensive BAS - Additional Features at Jail (Control of 30 RTUs)

ECONOMIZER CONTROL

Some of the existing air conditioning units are equipped to use outside air for cooling when outdoor air conditions permit, however, not all of these units operate properly. The BAS would take over this control so that the system will monitor the outdoor air conditions and modulate the outdoor air and return air dampers to provide a mixed air temperature acceptable for cooling conditions. Economizer control would be done by monitoring outdoor air temperature. When outdoor temperature is below 55°F, economizer control is enabled, the outdoor air and return dampers are positioned to maintain a 55°F mixture, and the mechanical cooling is disabled or at least minimized.

SUPPLY AIR TEMPERATURE RESET

Space temperature will be maintained by supply air temperature reset. Use of supply air temperature reset can increase comfort levels and save energy.

DEMAND CONTROLLED VENTILATION

Existing air conditioning unit outdoor air dampers have minimum position settings to bring in minimum outdoor air for ventilation based on the design maximum number of people in the area served by the system on a continuous basis. Installation of carbon dioxide sensors in the space or return air will allow control of outdoor air dampers to provide the required amount of ventilation air to maintain the level of carbon dioxide (CO2) below the recommended level. Outdoor air will be adjusted to the required amount for the number of people in the conditioned area on a real time basis. Heating and cooling of excess outdoor air will be eliminated, therefore yielding substantial savings.

CONTROLLED BUILDING EXHAUST

Existing building exhaust fans operate 24 hours per day, seven days a week throughout the year. During unoccupied periods when building HVAC systems are off, operation of building exhaust fans results an excessive and uncontrolled infiltration of outdoor air.

This document contains Performance Services Trade Secrets and Confidential information to be used by the addressee for evaluating the PSI proposal. Addressee shall not disclose the Confidential information to third parties without written consent of Performance Services.

The BAS will be used to control the five primary exhaust fans so that they only operate when building HVAC systems are in use.

Temperature Averaging at Court House

Hays County Courthouse has been retrofit with an air-conditioning system which is split into several zones. Each zone provides heating and cooling as needed, however the zones include tenants with different cooling needs. As a result, one tenant may be hot and another cold. By installing four additional temperature sensors and averaging the temperature within these zones, occupants can work in a more comfortable environment, without the need to over-cool the space and use electric heaters for individual comfort. It is important to point out that while temperature averaging will help address comfort issues, it will not completely resolve them. To completely address comfort issues, additional zoning would need to be added within the Court House.

DRAFT

This document contains Performance Services Trade Secrets and Confidential information to be used by the addressee for evaluating the PSI proposal. Addressee shall not disclose the Confidential information to third parties without written consent of Performance Services.

UCRM NO.: 6

UCRM NAME: Water Controls

SUMMARY DATA

All projects are analyzed in the dependent mode and in the following sequence:
Building loads, distribution systems, primary equipment, and utility management systems. All recommended UCRMs are assumed to be installed for dependency purposes.

kWh Savings	0	kWh/Year
Natural Gas Savings	7,864	Therms/Year
Water Savings	8,096	kgal/Year
Cost Savings	$105,293	Per Year
Implementation Cost	$680,035	
Simple Payback Period	6.5	Years
Est. Useful Life	20	Years

UCRM Description:
Domestic plumbing fixtures assessed during the facility survey included toilets, urinals, lavatory faucets, kitchen/break room faucets, showerheads, and custodial faucets. This survey included a count of the plumbing fixtures, measurements of the flow rates or flush volumes, and identification of leaks or defects.

Based on the water balance and observations during the water efficiency survey, we identified several opportunities for water savings and developed recommendations for achieving these savings.

Government Center Scope of Work

High Efficiency Urinal (HEU) Retrofit

Recommendation: HEUs are available that use a maximum of one pint per flush (0.125 gpf), or 87.5% less water than standard 1.0 gpf urinal. With the passage of the 1992 Energy Policy Act, 1.0 gpf urinals became the standard in the United States. New Standards developed by the EPA WaterSense Program are being adopted by the majority of plumbing manufacturers. PSI recommends 0.125 gpf over waterless urinals because of possible sediment and other maintenance issues that arise with waterless urinals.

The recommendation involves removal of 17 high flow (1.0 gpf)) urinal flush valves with 0.5 gpf valves, which is necessary to ensure that the fixtures work with maximum efficiency.

This document contains Performance Services Trade Secrets and Confidential information to be used by the addressee for evaluating the PSI proposal. Addressee shall not disclose the Confidential information to third parties without written consent of Performance Services.

Failure to install the correct valve can result in sedimentation of the drain line and other components.

High Efficiency Lavatory Faucet Aerator Retrofit

Recommendation: High efficiency aerators for lavatories typically use 0.5 gpm or less. The recommended action involves replacing 111 lavatory faucet aerators that have a flow rate of 2.2 gpm or greater with new high efficiency aerators having flow rates of 0.5 gpm or less.

High Efficiency Utility Faucet Aerator Retrofit

Recommendation: High efficiency aerators for utility faucets typically use 1.5 gpm. This recommended action involves installing four high efficiency aerators that have a flow rate of approximately 2.43 gpm on kitchen/break room faucets. It is recommended that the faucets be fitted with high efficiency aerators with flow rates not to exceed 1.5 gpm.

High Efficiency Kitchen Faucet Aerator Retrofit

Recommendation: High efficiency aerators for kitchens and break rooms typically use 1.5 gpm. The recommended action involves installing 19 high efficiency aerators that have a flow rate of 2.2 gpm on kitchen/break room faucets. It is recommended that the faucets be fitted with high efficiency aerators with flow rates not to exceed 1.5 gpm.

Hays County Jail Scope of Work

High Efficiency Toilet (HET) Retrofit

Recommendation: HETs use a maximum of 1.28 gpf, or approximately 60% less than the standard 3.5 gpf toilets. With the passage of the 1992 Energy Policy Act, 1.6 gpf toilets became the standard in the United States. The State of Texas now requires all toilets sold on or after January 1, 2014 to operate at 1.28 gpf or less.

The recommendation involves removal of all existing toilets with flush volumes of 1.6 gpf or greater and replacement with HETs (a total of 15 toilets). This recommendation includes replacing all porcelain and flush valves, which is necessary to ensure that the fixtures work with maximum efficiency.

High Efficiency Detention Flush and Lavatory Valve (HEDFR) Retrofit

Recommendation: HEDFRs use a maximum of 1.6 gpf, or approximately 55% less water than the standard 3.5 gpf toilets.

This document contains Performance Services Trade Secrets and Confidential information to be used by the addressee for evaluating the PSI proposal. Addressee shall not disclose the Confidential information to third parties without written consent of Performance Services.

The recommendation involves installation of an intelligent plumbing system having three (3) basic components on 155 toilets/Lavatories and 54 showers:

1. Controller
2. Pressure Activated Sensor
3. Valve (Lavatory, Flush, Shower, Etc.)

The electronic controller is the master control device in the water conservation system. It uses a microprocessor that's programmed at the factory with run-times, delays, lockout periods, etc., all designed to discourage misuse and conserve water. Savings are seen in the reduction of: Water used; sewage costs; and costs attributed to vandalism. A total of six remote control stations are included in this scope.

The pressure activated sensors, commonly called "buttons", have a housing made of solid stainless steel with the pressure activation circuitry potted and completely waterproof. The sensor is activated when 4-12 oz. of pressure is applied to the face of the button.

The valves can adapt to existing plumbing systems or can be piped in for new applications. Flush valves can be located remotely while maintaining proper gallons per flush requirements.

High Efficiency Lavatory Faucet Aerator Retrofit

Recommendation: High efficiency aerators for lavatories typically use 0.5 gpm or less. The recommended action involves replacing 32 lavatory faucet aerators that have a flow rate of 2.2 gpm or greater with new high efficiency aerators having flow rates of 0.5 gpm or less.

Water savings were calculated using engineering spreadsheets. Prior to calculating savings, baseline models were constructed that provided statistically valid baseline matches.

DRAFT

This document contains Performance Services Trade Secrets and Confidential information to be used by the addressee for evaluating the PSI proposal. Addressee shall not disclose the Confidential information to third parties without written consent of Performance Services.

UCRM NO.: 7

UCRM NAME: Window Film (QECB Funded UCRM)

SUMMARY DATA

All projects are analyzed in the dependent mode and in the following sequence:
Building loads, distribution systems, primary equipment, and utility management systems. All recommended UCRMs are assumed to be installed for dependency purposes.

kWh Savings	9,152	kWh/Year
Natural Gas Savings	0	Therms/Year
Water Savings	0	kgal/Year
Cost Savings	$752	Per Year
Implementation Cost	$42,302	
Simple Payback Period	56	Years
Est. Useful Life	20	Years

UCRM Description:
PSI will work with Hays County and the historical society to install window film that meets the aesthetic requirements of the Court House. This measure considers installing a high performance, clear window film. However, where the County has covered windows with black tarp in order to minimize glare, PSI recommends installing high performance, tinted window film to maintain acceptable working environments.

The Hays County Courthouse windows are historic, clear single pane glass. Compared to modern windows, these windows do not reject as much solar heat and have a higher emissivity (materials effectiveness in emitting energy as thermal radiation). Window glass is by nature highly thermally emissive. To improve thermal control (insulation and solar optical properties), window film will be applied to a total of 185 window panes. Window film will not be installed on a total of 16 window panes to prevent potential damage to windows with wire in the glass.

Benefits include energy savings as well as improved occupant comfort. Training will be provided by PSI to county personnel to properly maintain the window film.

Energy savings were calculated using the latest version of eQuest (3.64). Prior to calculating savings, baseline models were constructed that provided statistically valid baseline matches.

This document contains Performance Services Trade Secrets and Confidential information to be used by the addressee for evaluating the PSI proposal. Addressee shall not disclose the Confidential information to third parties without written consent of Performance Services.

UCRM NO.: 8

UCRM NAME: Window Restoration (Owner Buy Down UCRM)

SUMMARY DATA

All projects are analyzed in the dependent mode and in the following sequence:
Building loads, distribution systems, primary equipment, and utility management systems. All recommended UCRMs are assumed to be installed for dependency purposes.

kWh Savings	3,480	kWh/Year
Natural Gas Savings	0	Therms/Year
Water Savings	0	kgal/Year
Cost Savings	$307	Per Year
Implementation Cost	$374,843	
Simple Payback Period	1223	Years
Est. Useful Life	50	Years

UCRM Description:
The Hays County Courthouse has very old windows that in many cases no longer open, and in some cases the glass has begun to fall out and are in generally poor condition. Below is a condition report from the survey.

Current Condition: Window sashes, jambs and sills vary in condition throughout the building. There is significant air infiltration throughout, no weather stripping, gaps at sills and sashes, significant paint and glazing failure, loose glass, missing/broken hardware, and many sashes do not function. There is significant wood rot in many sashes and sills.

Restoration Methodology and Scope of Work: Sashes, inner stop and parting bead will be removed and transported to the restorer. The current blinds will be removed at this time, labeled and stored onsite. The window openings will be sealed using plywood. Once sashes are removed the window jambs will be thoroughly examined. Window jamb and sill repairs will be done onsite.

Window jamb, window sill prep and paint will be completed while sashes are removed. In the shop, sashes and stop will be placed in a steam oven to remove all paint and glazing; then sanded, primed, painted, glazed and slotted for weather stripping. A borate based preservative (Boracare) will be applied to all bare wood prior to paint application. This will minimize the risk of future rot or pest damage to the wood. New concealed interlocking weather stripping will be installed when the sashes are reinstalled – this will seal each sash at sides, bottom and meeting rail to minimize air and noise infiltration and allow for normal function of the window.

This document contains Performance Services Trade Secrets and Confidential information to be used by the addressee for evaluating the PSI proposal. Addressee shall not disclose the Confidential information to third parties without written consent of Performance Services.

Sashes will be installed with some new parting bead and original inner stop. Window jamb and brick mold will be painted but not interior window trim. Existing sash chain will be reused. Only the bottom sash will function, the top sash will be fixed. The workmanship will be warrantied for 10 years to exclude paint and glazing. Warranty from subcontractor.

Scope includes restoration of 89 windows at the Hays County courthouse.

Energy savings, albeit small, from this restoration will result from less infiltration. Other key benefits include: Minimized safety risk of broken or falling glass; Restoring windows before deterioration beyond point of repair.

DRAFT

This document contains Performance Services Trade Secrets and Confidential information to be used by the addressee for evaluating the PSI proposal. Addressee shall not disclose the Confidential information to third parties without written consent of Performance Services.

UCRM NO.: 9

UCRM NAME: HVAC & Plumbing Upgrades (QECB Funded UCRM)

SUMMARY DATA

All projects are analyzed in the dependent mode and in the following sequence:
Building loads, distribution systems, primary equipment, and utility management systems. All recommended UCRMs are assumed to be installed for dependency purposes.

kWh Savings	6,012	kWh/Year
Natural Gas Savings	0	Therms/Year
Water Savings	0	kgal/Year
Cost Savings	$530	Per Year
Implementation Cost	$240,136	
Simple Payback Period	453	Years
Est. Useful Life	20	Years

UCRM Description:
In the Courthouse, there are two (2) 7.5 split-system units that serve the basement area and IT servers in this building that are over 15 years old and are beyond their recommended useful life. There are also two (2) 15 ton split-systems that serve primarily the second floor that are very difficult to service due to the very limited access to these units. Additionally, these units have become relatively expensive to maintain due to various mechanical system failures over the last two years.

This measure considers replacing the four split-systems with new, high efficiency units having the same nominal cooling/heating capacities. Additionally, PSI recommends installing AC-1 and AC-2 new air handling units in the open ceiling space to improve maintainability.

Training will be provided by PSI to county personnel to properly maintain equipment installed.

Additionally, this measure includes replacing 16 old copper p traps with new copper p traps at the Jail. Replacement is need to due to pipe age and condition.

This document contains Performance Services Trade Secrets and Confidential information to be used by the addressee for evaluating the PSI proposal. Addressee shall not disclose the Confidential information to third parties without written consent of Performance Services.

Energy savings were calculated using the latest version of eQuest (3.64). Prior to calculating savings, baseline models were constructed that provided statistically valid baseline matches.

Buildings		Baseline			Guaranteed Savings					
Building Name & UCRMs	Gross Sqft	Electricity (kWh)	Natural Gas (CCF)	Water/WW (kgal)	Electricity (kWh)	% Savings	Natural Gas (CCF)	% Savings	Water/WW (kgal)	% Savings
Government Center Totals	**236,000**	**4,195,000**	**3,473**	**912**	**1,693,571**	**40%**	**335**	**10%**	**408**	**45%**
1-LED Lighting					*411,068*					
2-Power Conditioning					*113,721*					
3-Solar PV					*688,750*					
4-Demand Response										
5-Retro-Commissioning & BAS					*480,032*					
6-Water Controls							*335*		*408*	
Court House Totals	**21,396**	**271,680**	**1,265**	**46**	**101,804**	**37%**				
1-LED Lighting					*54,324*					
5-Retro-Commissioning & BAS					*28,836*					
8-Window Restoration					*3,480*					
7-Window Film					*9,152*					
9-HVAC Upgrades					*6,012*					
Juvenile Detention Totals	**43,222**	**815,616**	**13,693**	**2,497**	**233,144**	**29%**	0	0%	0	0%
1-LED Lighting					*211,180*					
2-Power Conditioning					*21,963*					
4-Demand Response										
Development Services Totals	**14,058**	**206,200**		**84**	**46,859**	**23%**				
1-LED Lighting					*46,859*					
5-Retro-Commissioning & BAS										
Health Department Totals	**13,327**	**244,338**	0	**84**	**75,479**	**31%**	0		0	0%
1-LED Lighting					*33,579*					
5-Retro-Commissioning & BAS					*41,900*					
Precinct 2 Totals	**14,174**	**154,234**		**56**	**34,786**	**23%**				
1-LED Lighting					*34,786*					
5-Retro-Commissioning & BAS										
Precinct 4 Totals	**6,272**	**101,600**	0	**75**	**45,186**	**44%**	0		0	0%
1-LED Lighting					*19,467*					
5-Retro-Commissioning & BAS					*25,719*					
Jacobs Well Totals	**2,400**	**19,000**		**115**	**5,993**	**32%**				
1-LED Lighting					*5,993*					
5-Retro-Commissioning & BAS										
Jail Totals	**83,306**	**1,981,920**	**648,400**	**17,500**	**733,195**	**37%**	**8,324**	**1%**	**7,875**	**45%**
1-LED Lighting					*373,198*					
2-Power Conditioning					*49,651*					
5-Retro-Commissioning & BAS					*11,306*					
6-Water Controls							*8,324*		*7,875*	
3-Solar PV					*299,040*					

This document contains Performance Services Trade Secrets and Confidential information to be used by the addressee for evaluating the PSI proposal. Addressee shall not disclose the Confidential information to third parties without written consent of Performance Services.

B. DETAILED COMMISSIONING PLAN

Systems Start-up and Commissioning & Operating Parameters

1.0 General

Performance Services shall commission the UCRMs, including major equipment and systems, to ensure they are set up to operate as intended and as required to achieve the guaranteed savings. During the final design and construction phases, Performance Services shall develop testing, commissioning and start-up procedures for the equipment, components and systems installed for the UCRMs. These procedures shall be in accordance with the manufacturers' guidelines, system performance objectives, and sequences of operation. Additionally, Performance Services will provide training and instruction for the operation and maintenance of the UCRMs.

Performance Services will provide and be responsible for the commissioning and start-up of all UCRMs at Hays County. This is accomplished as a continuation with the same team that developed, constructed and engineered the project. Commissioning is the act of statically and dynamically testing the installed equipment and systems, making sure the installed systems work and perform as they were designed. Although a simple concept, it is often overlooked but tremendously important. Because we guarantee energy savings, Performance Services has a vested interest that all systems, equipment, and controls work as designed and produce the intended results. The commissioning planning process begins during project development phase and is finalized during the implementation phase.

Performance Services believes that commissioning is a team activity, involving not only the Performance Services personnel, but also the customer's personnel, manufacturer's representatives, control technicians and the appropriate subcontractor. The commissioning plan is a valuable tool – for both Performance Services and all Hays County stakeholders involved with the project. It will accomplish the following:

- Verify compliance with specific equipment installation requirements and UCRM design intent
- Verify compliance with a facility's specific performance requirements
- Establish UCRM functional testing protocol and parameters
- Identify unique or seasonal testing requirements
- Coordinate testing requirements for M&V purposes
- Verify completion of commissioning activities and customer concurrence as appropriate

During the Construction Phase, Performance Services will finalize a detailed commissioning plan specific to the UCRMs selected by Hays County. Performance Services' commissioning is a comprehensive process that is an integral part of the design, construction, and operational phases of a project. It will, at a minimum, confirm that the systems and equipment installed by Performance Services fully function as intended and as designed.

The procedures, methods, documentation, and signoff requirements in the plan shall cover each phase of the commissioning process from pre-design through final acceptance and post-occupancy. All equipment will be fully tested and operationally verified in accordance with the manufacturer's operating parameters, requirements and recommendations. Additionally, Performance Services may utilize an authorized manufacturer's representative or qualified consulting engineer, to inspect and approve

This document contains Performance Services Trade Secrets and Confidential information to be used by the addressee for evaluating the PSI proposal. Addressee shall not disclose the Confidential information to third parties without written consent of Performance Services.

system installation for major equipment items (i.e., air valves, fan-walls, chillers, VAV terminal units, VSDs, controls, etc.).

Overview of Commissioning Process

Commissioning (Cx) is a systematic process of ensuring that all building systems perform interactively according to the design intent and the UCRM performance requirements. This is achieved through a complete commissioning process; beginning at the design phase with documented design and operating intent and continuing through construction and acceptance phases, with actual verification of performance.

Commissioning activities during the design phases are intended to achieve the following specific objectives:

- Provide a plan for the implementation of the commissioning process, including the initial scope of systems to be commissioned for the project.
- Ensure that the design and operational intent are clearly documented.
- Provide a design review focusing on system performance, maintainability, and adherence to UCRM performance requirements.
- Ensure that commissioning for the construction phase is adequately reflected in the bid documents.
- Ensure the various members of the commissioning team clearly understand their responsibilities in their commissioning roles.
- Ensure the applicable equipment and systems are installed properly and receive adequate preoperational checkout.
- Verify and document proper performance of equipment and systems.
- Ensure that operation and maintenance documentation is provided for the continued management of the facility after the construction project is complete.
- Ensure proper training of facilities management, Performance Services Operation & Maintenance and Performance Services Measurement & Verifications personnel.
- This plan does not provide a detailed explanation of required testing procedures. The detailed testing requirements and procedures will be found in the Commissioning Manual and contract specifications to be developed after UAR acceptance. Additionally, this plan does not provide extensive narrative on all commissioning concepts, as may be provided in other commissioning guides.

UCRM specific commissioning check lists will be provided as a separate submittal after the 100% design phase.

DRAFT

This document contains Performance Services Trade Secrets and Confidential information to be used by the addressee for evaluating the PSI proposal. Addressee shall not disclose the Confidential information to third parties without written consent of Performance Services.

C. DETAILED PROJECT MANAGEMENT PLAN

The purpose of this plan is to provide the necessary controls, supervision, inspections, tests and documentation for the utility cost reduction measures and definable features of work (DFOW) required by the Contract. Conformance to this plan will ensure compliance with the Contract documents and applicable standards related to materials, equipment, craftsmanship, finish and functional performance. This plan will assure quality results in keeping with budget, scope and schedule requirements. The Performance Services project management planning is compatible with project management processes and knowledge bases developed by Project Management Institute for the Project Management Professional® certification.

This plan will be accomplished with a Four-Phase process:

- Preparatory
- Initial
- Follow-up
- Functional Testing & Commissioning

The Quality Control plan will cover all suppliers and subcontractors, as well as Performance Services staff.

Performance Services, through the utilization of this Quality Control Plan, strives to obtain a uniform, high quality level of workmanship throughout design, procurement, fabrication construction, start-up and functional testing. To achieve this standard, the following policies will be followed:

1. Assure high quality by maintaining supervised controls and written instructions governing quality control procedures and practice.
2. Establish clearly defined responsibilities and authorities responsible for compliance.
3. Comply with the contractual requirements, specifications, standards, and the Quality Control Plan.
4. Maintain a document tracking system that would provide objective evidence of compliance to the Contract documents.
5. Initiate proactive procedures which would anticipate and pre-empt deficient practices which might lead to unsatisfactory quality.
6. Identify discrepancies in quality for immediate corrective action.
7. Assure that corrective action is implemented properly and in a timely manner.

The Quality Control Assurance Team shall coordinate with jobsite personnel to assure compliance with the quality control requirements of the project, and successfully implement the procedures contained in this plan. The responsibilities of the Team are as follows:

- Provide review of design documents.
- Maintain documentation files and logs.
- Coordinate the quality control efforts of the subcontractors.
- Coordinate the activities of outside testing agencies.
- Check craftsman qualifications and certifications as part of standard submittal review.
- Conduct technical submittal reviews to support the Performance Services Construction Department.
- Lead the Preparatory Meetings.
- Develop and maintain the master inspection and test register and track completion of inspection and testing activities.
- Perform and document Initial, Follow-Up and Final inspections.

This document contains Performance Services Trade Secrets and Confidential information to be used by the addressee for evaluating the PSI proposal. Addressee shall not disclose the Confidential information to third parties without written consent of Performance Services.

- Generate and manage Work Completion lists.
- Administer Discrepancy Reports.
- Administer the Final Punch List.
- Complete Construction Quality Control (CQC) Reports.

The Quality Control/Assurance process is designed to have direct effect on the work at the sites. The organization shall employ a four-phase process to provide the highest degree of accountability and compliance possible. The Four-phase process will be covered in detail in Section 6.0 Quality Control Process. This team and process are designed to prevent errors and omissions before they occur.

PREPARATORY PHASE – This phase shall be performed prior to beginning work on each URCM. Prior to the preparatory phase meeting, the Quality Control Assurance Team must examine carefully the contract plans and specifications for the particular feature of work. With a thorough knowledge of the Contract requirements, the Quality Control Assurance Team can assure all necessary items pertaining to the work are covered. The Quality Control Systems Manager is in charge of the meeting. He must ensure that the proper people representing the contractor and/or subcontractors who will be involved in the URCM and definable feature of work are present. He must provide notice to the Owner's representative as to when the meeting will be held. A successful Preparatory Phase results in a clear understanding of the work and the standards to which the work will be evaluated. The meeting shall also result in a list of steps to be employed to ensure common deficiencies are eliminated. Minutes will be prepared and attached to the Construction Quality Control Daily Report.

INITIAL PHASE - This phase must be accomplished at the beginning of any URCM and definable feature of work. The "Initial Phase" will verify that control for the work developed in the "Preparatory Meeting" is implemented and the work is performed at the level of workmanship that is mutually agreed upon. This sets the standard of workmanship for this feature of work. This phase is where all differences are resolved. Safety is checked to include compliance with the Environmental Site Specific Safety and Health Plan (ESSS&HP) and Activity Hazard Analysis is reviewed during the "Preparatory Meeting." The Owner's representative shall be notified in advance of the "Initial Phase" inspection. The results will be documented and attached to the Quality Control Daily Reports. The purpose is to ensure the work methods, materials, and the workmanship all comply with the approved design documents. The primary emphasis is on the effectiveness of the controls put into practice. Minutes will be prepared and attached to the CQC Daily Report.

FOLLOW-UP PHASE - This shall be performed to assure continuing compliance with contract requirements, including control testing, until completion of the particular feature of work. The Quality Control Assurance Team should continually refer back to the standards set in the "Preparatory and Initial Phases." The primary emphasis is on the continued effectiveness of the controls established in the Preparatory Phase and demonstrated in the Initial Phase. Both the QC Systems Manager and the CQC Manager will document this activity in their respective daily reports. The preceding phases were accomplished as a team. However this phase involves the separate observation of the QC Systems Manager and the CQC Manager.

FUNCTIONAL TESTING and COMMISSIONING PHASE - This is the final phase. Commissioning is critical in ensuring the system (especially mechanical systems) performs as intended per the contract.

This document contains Performance Services Trade Secrets and Confidential information to be used by the addressee for evaluating the PSI proposal. Addressee shall not disclose the Confidential information to third parties without written consent of Performance Services.

CONSTRUCTION CLOSEOUT

Performance Services shall use all reasonable efforts to install the Equipment and perform all Services hereunder in accordance with the Installation Schedule and the Scope of work. Performance Services will cooperate and coordinate with Hays County as to facilitate Performance Services performance.

Upon the completion of each URCM and/or per each location, Performance Services will request formal inspection from Hays County. Each of the items of Equipment shall be inspected by Performance Services, Hays County and Performance Services Contractor. These inspections can be scheduled on a weekly basis by means of the construction progress meeting to be held throughout the duration of the Project. The installation of Equipment and Performance Services related Services shall have achieved substantial completion ("Substantial Completion is defined as having beneficial use of equipment") when all Equipment has been physically constructed and installed in accordance with the Equipment/Services Scope Document, except for minor items of work that will not materially affect safe and substantial normal use and operation of the Equipment taken as a whole (such minor items of uncompleted work shall constitute the "Punch List") and the Equipment has successfully completed such operational tests, in accordance with operational standards established by the Equipment manufacturers.

When Performance Services determines that Substantial Completion has been achieved, Performance Services shall provide Hays County a Substantial Completion Notice, along with a list of punch list items of work outstanding and request a formal inspection. Hays County shall accept the Substantial Completion Notice if the applicable requirements of scope of work for that particular URCM have been satisfied and inspected. Within ten days after receipt of Performance Services Substantial Completion Notice, Hays County shall inspect and respond to Performance Services in writing either confirming that Substantial Completion has been achieved or if reasonable cause exists, rejecting such Substantial Completion Notice and specifying in detail the reasons therefore.

If Hays County rejects Performance Services Substantial Completion Notice and/or Punch List, Performance Services shall complete, correct or explain the deficient aspect of its Services, the Substantial Completion Notice or the Punch List, as the case may be, and shall submit an amended Substantial Completion Notice and/or Punch List, as appropriate, whereupon Hays County shall once again respond thereto as provided above.

The date of Substantial Completion shall be deemed to be and relate back to the date upon which Performance Services submitted to Hays County the Substantial Completion Notice which is either approved or deemed approved with comments or punch list by Hays County.

Generally the installation of Equipment and Performance Services related Services hereunder shall have achieved final completion ("Final Completion") when Substantial Completion has been achieved and all Punch List items have been completed. When Performance Services determines that Final Completion has been achieved, Performance Services shall provide Hays County a Final Completion Notice. Hays County shall accept Performance Services Final Completion Notice if the applicable requirements of the URCM have been satisfied. Within ten days after receipt of Performance Services Final Completion Notice, Hays County shall respond to Performance Services in writing either confirming that Final Completion has been

This document contains Performance Services Trade Secrets and Confidential information to be used by the addressee for evaluating the PSI proposal. Addressee shall not disclose the Confidential information to third parties without written consent of Performance Services.

achieved or if reasonable cause exists, rejecting such Final Completion Notice and specifying the Punch List items which have not been completed.

If Hays County rejects Performance Services Final Completion Notice, Performance Services shall complete, correct or explain the deficient aspect of its Services or the Final Completion Notice, as the case may be, and shall submit an amended Final Completion Notice, whereupon Hays County shall once again respond thereto as provided above. The date of Final Completion shall be deemed to be and relate back to the date upon which Performance Services submitted to Hays County the Final Completion Notice which is either approved or deemed approved.

POST CONSTRUCTION SERVICES

Performance Services Project Management staff will coordinate, schedule and provide training on all the UCRMs implemented. Operation and Maintenance Manuals will be provided in hard copy and electronically. The O&M Manuals will include product data, commissioning and Labor and Material warranties. The warranty documents will clearly outline the procedures for material and labor warranties. Performance Services will assist Hays County with all warranty issues to ensure a quick, smooth and reasonable solution with all materials and workmanship.

Performance Services can offer and manage maintenance plans, re-commissioning plans to ensure that the equipment is maintained, operating properly and achieving the savings as required.

DRAFT

This document contains Performance Services Trade Secrets and Confidential information to be used by the addressee for evaluating the PSI proposal. Addressee shall not disclose the Confidential information to third parties without written consent of Performance Services.

The following provides details of the project necessary to quantify cost of installed equipment, guaranteed savings and payback.

Overall Project Summary Table

		ANNUAL SAVINGS								Project Cost ($)	Payback (yrs.)
UCRM No.	UCRM Title	Electric Energy (kWh/yr)	Demand (kW/yr)	Electric ($/yr)	Natural Gas (th/yr)	Natural Gas ($/yr)	Water/Sewer (kgal/yr)	Water/Sewer ($/yr)	Other Savings		
1	LED Lighting	1,190,455	3,376	$103,024	0	$0			$39,687	$1,062,712	7.4
2	Power Conditioning	185,335	254	$15,207	0	$0			$0	$179,200	11.8
3	Solar PV	987,790	3,387	$87,965	0	$0			$0	$1,522,893	17
4	Demand Response	0	0	$0	0	$0			$27,450	$663,415	24.2
5	Retro-Cx & BAS with Tridium Front End	587,793	480	$47,056	0	$0			$0	$868,835	18
6	Water Controls	0	0	$0	7,864	$5,112	8,096	$100,181	$0	$680,035	6.5
7	Window Film	9,152	13	$752	0	$0			$0	$42,302	56
8	Window Restoration	3,480	10	$307	0	$0			$24,990	$374,843	15
9	HVAC & Plumbing Upgrades	6,012	18	$530	0	$0			$0	$240,136	453
	Totals	**2,970,017**	**7,537**	**$254,841**	**7,864**	**$5,112**	**8,096**	**$100,181**	**$92,127**	**$5,634,371**	

Contract Term	15 Years	
Utility Assessment Report Cost	$75,000	Included in above costs
P&P Bonding Cost	$67,612	Included in above costs
Initial Measurement & Verification Cost	$0	
IMPLEMENTATION TOTALS	$5,634,371	Total cost of project
Guaranteed Savings	$452,260	Utility and maintenance savings
Simple Payback (Excluding Financing Cost)	12.5	Years
1st Year M&V Service Cost	$24,040	May be cancelled at any time
Financing Cost	$1,131,322	

QECB Funded Project Scope

		ANNUAL SAVINGS								Project Cost ($)	Payback (yrs.)	Energy Savings Percentage
UCRM No.	UCRM Title	Electric Energy (kWh/yr)	Demand (kW/yr)	Electric ($/yr)	Natural Gas (th/yr)	Natural Gas ($/yr)	Water/Sewer (kgal/yr)	Water/Sewer ($/yr)	Other Savings			
4	Demand Response	0	0	0	0	$0	0	$0	$27,450	$663,415	24.2	4%
1	LED Lighting	757,348	1,754	$64,144					$9,343	$526,996	7.2	21%
7	Window Film	9,152	13	$752	0	$0	0	$0	$0	$42,302	56	3%
9	HVAC & Plumbing Upgrades	6,012	18	$530	0	$0	0	$0	$0	$240,136	453.4	2%
	Totals	**772,512**	**1,784**	**$65,426**	**0**	**$0**	**0**	**$0**	**$36,793**	**$1,472,849**	**14.4**	**30%**

Public Lease Purchase Funded Project Scope

		ANNUAL SAVINGS								Project Cost ($)	Payback (yrs.)	Estimated Project Lifetime (yrs.)
UCRM No.	UCRM Title	Electric Energy (kWh/yr)	Demand (kW/yr)	Electric ($/yr)	Natural Gas (th/yr)	Natural Gas ($/yr)	Water/Sewer (kgal/yr)	Water/Sewer ($/yr)	O&M Savings			
1	LED Lighting	433,107	1,622	$38,880	0	$0	0	$0	$30,344	$535,716	7.7	20
2	Power Conditioning	185,335	254	$15,207	0	$0	0	$0	$0	$179,200	11.8	20
3	Solar PV	987,790	3,387	$87,965	0	$0	0	$0	$0	$1,522,893	17	25
4	Retro-Cx & BAS with Tridium Front End	587,793	480	$47,056	0	$0	0	$0	$0	$868,835	18.5	20
5	Water Controls	0	0	$0	7,864	$5,112	8,096	$100,181	$0	$680,035	6.5	20
	Totals	**2,194,025**	**5,742**	**$189,109**	**7,864**	**$5,112**	**8,096**	**$100,181**	**$30,344**	**$3,786,679**	**11.7**	

This document contains Performance Services Trade Secrets and Confidential information to be used by the addressee for evaluating the PSI proposal. Addressee shall not disclose the Confidential information to third parties without written consent of Performance Services.

16 Year Cash Flow

Hays County ESPC Project										
Total Construction Cost								$	5,559,371	
Investment Grade Audit								$	75,000	
Customer Buy Down								$	374,843	
3rd Party Review								$	10,000	
Construction Period (Months)									10.0	
Construction Interest (Capitalized) - Optional								$	-	
Utility Rebate (Not Guaranteed - Included in year 0 O&M Savings) Est. at $60,000										
Total Construction amount including incidental expenses								$	5,269,528	
Term of Financing: 15 years										
TOTAL AMOUNT FINANCED USING					INTEREST RATE (See Note 6 Below)			$	5,269,528	
	Savings				Payments					
Year	Energy	Lighting Materials Savings Demand Response & Est. Rebate	Courthouse Window Deferred Savings	Total	Annual Debt Service	Annual Service Cost	Annual Maintenance Cost	M&V Services	Total Annual Payments	Net Cash Flow $
1	2	3	4	5	6	7	8	9	10	11
0	$71,964	$60,000		$131,964	$0	$0	$0	$0	$0	$131,964
1	$359,819	$67,137	$24,990	$451,945	$97,700	$0	$0	$24,040	$121,740	$330,205
2	$367,015	$67,137	$24,990	$459,142	$425,896	$0	$0	$24,521	$450,417	$8,725
3	$374,355	$67,137	$24,990	$466,482	$425,667	$0	$0	$25,011	$450,678	$15,804
4	$381,842	$67,137	$24,990	$473,969	$425,291	$0	$0	$25,511	$450,802	$23,166
5	$389,479	$67,137	$24,990	$481,606	$424,907	$0	$0	$26,022	$450,929	$30,677
6	$397,269	$61,184	$24,990	$483,442	$437,702	$0	$0	$26,542	$464,244	$19,198
7	$405,214	$61,184	$24,990	$491,388	$437,405	$0	$0	$27,073	$464,478	$26,910
8	$413,318	$61,184	$24,990	$499,492	$437,099	$0	$0	$27,614	$464,713	$34,779
9	$421,585	$61,184	$24,990	$507,758	$436,788	$0	$0	$28,167	$464,955	$42,804
10	$430,016	$61,184	$24,990	$516,190	$436,467	$0	$0	$28,730	$465,197	$50,993
11	$438,617	$27,450	$24,990	$491,056	$436,142	$0	$0	$29,305	$465,447	$25,610
12	$447,389	$27,450	$24,990	$499,829	$435,808	$0	$0	$29,891	$465,699	$34,130
13	$456,337	$27,450	$24,990	$508,776	$435,468	$0	$0	$30,489	$465,957	$42,820
14	$465,464	$27,450	$24,990	$517,903	$435,118	$0	$0	$31,098	$466,216	$51,687
15	$474,773	$27,450	$24,990	$527,212	$434,761	$0	$0	$31,720	$466,481	$60,731
16	$484,268	$27,450	$0	$511,718	$273,219	$0	$0	$32,355	$305,574	$206,145
Total	$6,778,725	$866,305	$374,843	$8,019,873	$6,435,438	$0	$0	$448,088	$6,883,527	$1,136,346

Notes by Column:

1 The projections reflect the economic benefits over a 15 year term and during the construction period (yr. 0).

2 Assumes an annual increase in energy costs per year of 2%

3 Includes Demand Response and Lighting Material savings. Savings reduce in year 6 based on not all LED lighting having a 10 year warranty. Lighting warranty savings end after year 10. Est. rebate is in year 0.

4 Courthouse window replacement deferred maintenance

5 Sum of Energy and Other Savings

6 Annual estimated debt service. Paid annually after Commencement Date (construction completion) of project based on financing at 1.55% for HC QECB funds and 2.69% for lease purchase over 16 years.

7 Annual service Cost. Assues an annual increase for inflation of 0%

8 Annual maintenance labor cost increase during warranty/guarantee period.

9 Measurement and Verification Services. Assumes an annual increase for inflation of 2%.

10 Total projected annual payments

11 Represents net annual cash flow

This document contains Performance Services Trade Secrets and Confidential information to be used by the addressee for evaluating the PSI proposal. Addressee shall not disclose the Confidential information to third parties without written consent of Performance Services.

VIII. APPENDICES

DRAFT

This document contains Performance Services Trade Secrets and Confidential information to be used by the addressee for evaluating the PSI proposal.
Addressee shall not disclose the Confidential information to third parties without written consent of Performance Services.

A. UTILITY RATE SCHEDULES – City of San Marcos Rates

Electric Rate

City of San Marcos
Utility Customer Service Division
636 E. Hopkins
San Marcos TX 78666

MTC

Govt Ctr

000004

000004 Grp No: 000004 Page: 3 of 3 (Seq# 9)
HAYS COUNTY GOVERNMENT CENTER
712 S STAGECOACH TRL STE 1071
SAN MARCOS TX 78666-6247

Account Statement Page 1 of 1

ACCOUNT INFORMATION

ACCOUNT:	001-00029393-01
SERVICE ADDRESS:	712 S STAGECOACH TRL
BILLING DATE:	05-16-2016
DUE DATE:	**06-03-2016**
SERVICE PERIOD:	04-11-2016 TO 05-02-2016

ACCOUNT ACTIVITY

Meter	Type	Previous	Current	Mult.	Usage
0000900335	E	18197	18426	1000.0	229000
0000900335	E	0	76	1000.0	760

CURRENT CHARGES

Service Description	Rate	Usage	Charge
ELECTRIC CHARGES:			
Basic Charge, Commercial			218.40
kWh Charge, Com	0.010200	229000	2,335.80
kW Demand Charge, Com	3.440000	760	2,614.40
Power Cost Recovery Fact, Com	0.067058	229000	15,356.28
Subtotal			**20,524.88**
CURRENT CHARGES			**20,524.88**
TOTAL AMOUNT DUE			**20,524.88**

Water/Sewer Rate

City of San Marcos
Utility Customer Service Division
636 E. Hopkins
San Marcos TX 78666

MTC

Govt Ctr

000004

000004 Grp No: 000004 Page: 2 of 3 (Seq# 8)
HAYS COUNTY GOVERNMENT CENTER
712 S STAGECOACH TRL STE 1071
SAN MARCOS TX 78666-6247

Account Statement Page 1 of 1

ACCOUNT INFORMATION

ACCOUNT:	001-00028605-01
SERVICE ADDRESS:	712 S STAGECOACH TRL
BILLING DATE:	05-16-2016
DUE DATE:	**06-03-2016**
SERVICE PERIOD:	04-04-2016 TO 05-03-2016

ACCOUNT ACTIVITY

Meter	Type	Previous	Current	Mult.	Usage
0071783266	W	400112	407413	10.0	73010

CURRENT CHARGES

Service Description	Rate	Usage	Charge
WATER CHARGES:	Charge per 1000 gallons		
Water Basic Charge			160.06
Water Block 1	0.002160	13000	28.08
Water Block 2	0.006490	12000	77.88
Water Block 3	0.007350	48010	352.87
Subtotal			**618.89**
SEWER CHARGES:	Charge per 1000 gallons		
Sewer Basic Charge			153.62
Sewer Block 2	0.006930	60010	415.87
Subtotal			**569.49**
CURRENT CHARGES			**1,188.38**
TOTAL AMOUNT DUE			**1,188.38**

This document contains Performance Services Trade Secrets and Confidential information to be used by the addressee for evaluating the PSI proposal. Addressee shall not disclose the Confidential information to third parties without written consent of Performance Services.

B. DETAILED BACKUP CALCULATIONS & COMPUTER INPUT/OUTPUT SHEETS

Spreadsheet Analysis

1. UCRM #1 - LED Lighting Savings
2. UCRM #2 - Power Conditioning Savings
3. UCRM #4 – Demand Response
4. UCRM #6 - Water Controls Savings
5. UCRM #8 – Window Restoration
6. UCRM #9 – HVAC Upgrades

Modeling Analysis

1. UCRM #3 – Solar PV
2. UCRM #5 – Retro-Commissioning & Building Automation Savings
3. UCRM #7 – Window Film

DRAFT

This document contains Performance Services Trade Secrets and Confidential information to be used by the addressee for evaluating the PSI proposal. Addressee shall not disclose the Confidential information to third parties without written consent of Performance Services.

UCRM-1 LED Lighting Upgrades

Building	Measure	Annual kW Savings	Annual kWh Savings	Demand Savings	Energy Savings	Total Cost Savings	Ltg Warranty Svgs
GC	LED Lighting	1,723	456,742	$5,928	$35,287	$41,215	$20,434
CH	LED Lighting	194	60,360	$700	$4,663	$5,363	$1,913
JD	LED Lighting	424	234,645	$1,910	$17,950	$19,860	$3,041
DS	LED Lighting	178	52,066	$0	$4,222	$4,222	$1,635
HD	LED Lighting	120	37,310	$432	$2,883	$3,315	$956
P2	LED Lighting	132	38,651	$447	$2,664	$3,112	$1,706
P4	LED Lighting	69	21,630	$0	$1,754	$1,754	$679
JW	LED Lighting	21	6,659	$0	$540	$540	$159
Jail	LED Lighting	888	414,665	$3,055	$32,036	$35,091	$9,163
TOTAL ALL BUILDINGS		3,751	1,322,728	$12,472	$102,000	$114,471	$39,687
TOTAL AFTER SAFETY FACTOR		**3,376**	**1,190,455**	**$11,225**	**$91,800**	**$103,024**	**$39,687**

Electric Rate for GC & Jail

Season	Cost per kW	Cost per kWh
Year Around	$3.44	$0.07726

Electric Rate for JD

Season	Cost per kW	Cost per kWh
Year Around	$4.50	$0.07650

Electric Rate

Season	Cost per kW	Cost per kWh
Year Around	$0.00	$0.08786

Electric Rate for CH & HD

Season	Cost per kW	Cost per kWh
Year Around	$3.61	$0.07726

Electric Rate for P2

Season	Cost per kW	Cost per kWh
Year Around	$3.38	$0.06893

Electric Rate for DS, P4 & JW

Season	Cost per kW	Cost per kWh
Year Around	$0.00	$0.08109

Savings Safety Factor: 90%

Lighting Lamps & Ballasts (No Labor) Warranty Savings Analayis (10 Year Warranty[4])

All T12 and T8 lamps will need to be replaced within the next 5 years.	T8 and Other to T8 Replacements and Other over years 1-6					
	Fixtures	Lamps to be Replaced	Cost per lamp	Cost per ballast[(4)]	Ballasts to be Replaced	**Cost**
	6,135	13,146	$15.16	$12.00	2,454	**$228,715**
A portion of lamps and ballasts will need to be replaced a 2nd time within the 10 year warranty period.	**T8 and Other to T8 and Other Replacements over years 7-10**					
	Fixtures	Lamps to be Replaced	Cost per lamp	Cost per ballast	Ballasts to be Replaced	**Cost**
	6,135	7,512	$15.16	$12.00	1,636	**$133,499**
					TOTAL	**$362,214**
					Cost per Fixture per Year	**$5.90**

Notes:

1. Typical lighting fixture: 2.5 lamps with ballast
2. Average fluorescent lamp life - 7 years
3. Average fluorescent ballast life - 15 years
4. Linear LED lamps, associated drivers and new fixtures will come with a 10 year manufacturer warranty
5. Lighting material cost data (paid invoices) provided by Hays County
6. Approximately 15 percent of the fixtures being retrofit to LED will have a 5 year warranty versus a 10 warranty - Screw and plug in CFL replacement LED lamps

T8 Lamp Cost

120 T8 linear fluorescent lamps ordered from Commercial Lighting
Total cost for materials - $1,818.90
Unit Cost per T8 Lamp - $15.16

T8 Ballast Cost Data

No purchase data available so we are using a conservative value of $12 each

Building	Map ID	Description	Area Usage Type	Qty	Non-Op	Adj. Qty*	Existing Fixture Type	Existing WPF	Existing kW Per Space	Existing kWh Per Space	Usage Hours Per Space	Up Qty	Upgrade Type	Control Qty	Control	Upgraded WPF	Proposed kW Per Space	Proposed kWh Per Space	Post Usage Hours Per Space	kW Reduction	Annual kWh Reduction
JUV		ENTRY VESTIBULE	Common Areas & Hallways	1		1	4W2L T8	59	0.06	391.17	6630	1	4LED13W-2L			26	0.03	172.38	6630	0.03	218.79
JUV		RR LOBBY	Common Areas & Hallways	5		5	4W2L T8	59	0.30	977.93	3315	5	4LED13W-2L			26	0.13	430.95	3315	0.17	546.98
JUV		COMMON RR LOBBY	Common Areas & Hallways	6		6	4W2L T8	59	0.35	2347.02	6630	6	4LED13W-2L			26	0.16	1034.28	6630	0.20	1312.74
JUV		RR LOBBY	EMERGENCY LIGHTING	1		1	RLED	3	0.00	19.89	6630	0	DNR			0	0.00	19.89	6630	0.00	0.00
JUV		WORK OUT AREA	Common Areas & Hallways	1		1	4W2L T8	59	0.06	391.17	6630	1	4LED13W-2L			26	0.03	172.38	6630	0.03	218.79
JUV		TRAINING ROOM	Conference & Meeting Rooms	9		9	24TP4L T8	115	1.04	6862.05	6630	9	4LED18-2L DIM	1	WKM-PP-4P	37	0.33	1545.45	4641	0.70	5316.60
JUV		TRAINING ROOM OFF	PRIVATE OFFICE	1		1	24TP4L T8	115	0.12	762.45	6630	1	4LED18W-2L 24B			37	0.04	245.31	6630	0.08	517.14
JUV		TRAINING ROOM OFF ST	Storage Room	1		1	24TP4L T8	115	0.12	762.45	6630	1	4LED13W-2L 24B			26	0.03	172.38	6630	0.09	590.07
JUV		WRR	Common Restroom	2		2	4W2L T8	59	0.12	782.34	6630	2	4LED13W-2L			26	0.05	344.76	6630	0.07	437.58
JUV		MRR	Common Restroom	2		2	4W2L T8	59	0.12	782.34	6630	2	4LED13W-2L			26	0.05	344.76	6630	0.07	437.58
JUV		SERVER ROOM	Storage Room	1		1	4W2L T8	59	0.06	391.17	6630	1	4LED13W-2L			26	0.03	172.38	6630	0.03	218.79
JUV		VISITATION ROOM	Visitation Room	1		1	4W2L T8	59	0.06	391.17	6630	1	4LED13W-2L			26	0.03	172.38	6630	0.03	218.79
JUV		VISITATION ROOM	Visitation Room	1		1	4W2L T8	59	0.06	391.17	6630	1	4LED13W-2L			26	0.03	172.38	6630	0.03	218.79
JUV		ADMIN HALL	General Work Area	5		5	24TP4L T8	115	0.58	3812.25	6630	5	4LED18W-2L 24B			37	0.19	1226.55	6630	0.39	2585.70
JUV		ADMIN HALL	EMERGENCY LIGHTING	2		2	RLED	3	0.01	39.78	6630	0	DNR			0	0.01	39.78	6630	0.00	0.00
JUV		ADMIN - GREETING & COPY	General Work Area	3		3	24TP4L T8	115	0.35	2287.35	6630	3	4LED18W-2L 24B			37	0.11	735.93	6630	0.23	1551.42
JUV		PVT OFF CORNER	PRIVATE OFFICE	2		2	24TP4L T8	115	0.23	1524.90	6630	2	4LED18W-2L 24B			37	0.07	490.62	6630	0.16	1034.28
JUV		PVT OFF MIDDLE N	PRIVATE OFFICE	1		1	24TP4L T8	115	0.12	762.45	6630	1	4LED18W-2L 24B			37	0.04	245.31	6630	0.08	517.14
JUV		PVT OFF END E	PRIVATE OFFICE	1		1	24TP4L T8	115	0.12	762.45	6630	1	4LED18W-2L 24B			37	0.04	245.31	6630	0.08	517.14
JUV		PVT OFF CORNER E	PRIVATE OFFICE	2		2	24TP4L T8	115	0.23	1524.90	6630	2	4LED18W-2L 24B			37	0.07	490.62	6630	0.16	1034.28
JUV		WRR	Common Restroom	1		1	4W2L T8	59	0.06	391.17	6630	1	4LED13W-2L			26	0.03	172.38	6630	0.03	218.79
JUV		PVT OFF MIDDLE E	PRIVATE OFFICE	2		2	24TP4L T8	115	0.23	1524.90	6630	2	4LED18W-2L 24B			37	0.07	490.62	6630	0.16	1034.28
JUV		PVT OFF SE	PRIVATE OFFICE	1		1	24TP4L T8	115	0.12	762.45	6630	1	4LED18W-2L 24B			37	0.04	245.31	6630	0.08	517.14
JUV		CONF RM	Conference & Meeting Rooms	3		3	24TP4L T8	115	0.35	2287.35	6630	3	4LED18W-2L 24B			37	0.11	735.93	6630	0.23	1551.42
JUV		MRR	Common Restroom	1		1	4W2L T8	59	0.06	391.17	6630	1	4LED13W-2L			26	0.03	172.38	6630	0.03	218.79
JUV		ENTRY TO CONTROL	Control Booth	4		4	24TP4L T8	115	0.46	3049.80	6630	4	4LED18W-2L 24B			37	0.15	981.24	6630	0.31	2068.56
JUV		ENTRY TO VISITATION	Jail - Common Area	2		2	24TP4L T8	115	0.23	1524.90	6630	2	4LED18W-2L 24B			37	0.07	490.62	6630	0.16	1034.28
JUV		CONTROL BOOTH & HALL	Jail - Common Area	4		4	24TP4L T8	115	0.46	3049.80	6630	4	4LED18W-2L 24B			37	0.15	981.24	6630	0.31	2068.56
JUV		VISITATION	Jail - Visitation	5		5	24TP4L T8	115	0.58	3812.25	6630	5	4LED18W-2L 24B			37	0.19	1226.55	6630	0.39	2585.70
JUV		VISITATION RR	Jail - Visitation	1		1	24TP4L T8	115	0.12	762.45	6630	1	4LED18W-2L 24B			37	0.04	245.31	6630	0.08	517.14
JUV		CONTROL OFF	PRIVATE OFFICE	3	1	2	24TP4L T8	115	0.23	1524.90	6630	3	4LED18W-2L 24B			37	0.11	735.93	6630	0.12	788.97
JUV		COMMON AREA BACK	Common Areas & Hallways	23		23	24TP4L T8	115	2.65	17536.35	6630	23	4LED13W-2L 24B			26	0.60	3964.74	6630	2.05	13571.61
JUV		MECH ACROSS FROM VISIT	Mechanical/Electrical Room	1		1	4W2L T8	59	0.06	391.17	6630	1	4LED13W-2L			26	0.03	172.38	6630	0.03	218.79
JUV		ISO ROOM	Jail - Inmate Holding or Living	1		1	14VP3L T8 NL	88	0.09	583.44	6630	1	4LED13W-3L			40	0.04	265.20	6630	0.05	318.24
JUV		ALPHA ENTRY	Jail - Common Area	1		1	4VP2L T8	58	0.06	384.54	6630	1	4LED13W-2L			26	0.03	172.38	6630	0.03	212.16
JUV		ALPHA ENTRY NURSE OFF	Jail - Support Office	1		1	24TP4L T8	115	0.12	762.45	6630	1	4LED18W-2L 24B			37	0.04	245.31	6630	0.08	517.14
JUV		ALPHA POD COMMON	Jail - Inmate Holding or Living	10		10	4VP2L T8	58	0.58	3845.40	6630	10	4LED15W-2L			31	0.31	2055.30	6630	0.27	1790.10
JUV		ALPHA POD STORAGE	Jail - Inmate Holding or Living	1		1	4VP2L T8	58	0.06	384.54	6630	1	4LED15W-2L			31	0.03	205.53	6630	0.03	179.01
JUV		POD HALL NORTH & SHOWER	Jail - Inmate Holding or Living	5		5	4VP2L T8	58	0.29	1922.70	6630	5	4LED13W-2L			26	0.13	861.90	6630	0.16	1060.80
JUV	1	ISO ROOM	Jail - Inmate Holding or Living	1		1	14VP3L T8 NL	88	0.09	583.44	6630	1	4LED13W-3L			40	0.04	265.20	6630	0.05	318.24
JUV		SHARED ROOM	Jail - Inmate Holding or Living	3		3	14VP3L T8 NL	88	0.26	1750.32	6630	3	4LED13W-3L			40	0.12	795.60	6630	0.14	954.72
JUV	3	ISO ROOM	Jail - Inmate Holding or Living	1		1	14VP3L T8 NL	88	0.09	583.44	6630	1	4LED13W-3L			40	0.04	265.20	6630	0.05	318.24
JUV	4	ISO ROOM	Jail - Inmate Holding or Living	1		1	14VP3L T8 NL	88	0.09	583.44	6630	1	4LED13W-3L			40	0.04	265.20	6630	0.05	318.24
JUV	5	ISO ROOM	Jail - Inmate Holding or Living	1		1	14VP3L T8 NL	88	0.09	583.44	6630	1	4LED13W-3L			40	0.04	265.20	6630	0.05	318.24
JUV	6	ISO ROOM	Jail - Inmate Holding or Living	1		1	14VP3L T8 NL	88	0.09	583.44	6630	1	4LED13W-3L			40	0.04	265.20	6630	0.05	318.24
JUV	6	SORAGE BY SHOWERS	Jail - Inmate Holding or Living	1		1	4W2L T8	59	0.06	391.17	6630	1	4LED13W-2L			26	0.03	172.38	6630	0.03	218.79
JUV	4	COMMON RROOM	Jail - Inmate Holding or Living	1		1	14VP3L T8 NL	88	0.09	583.44	6630	1	4LED13W-3L			40	0.04	265.20	6630	0.05	318.24
JUV	4	DEADBOLT STORAGE	Jail - Support Area	1		1	14VP3L T8 NL	88	0.09	583.44	6630	1	4LED13W-3L			40	0.04	265.20	6630	0.05	318.24
JUV	4	COMMON RROOM	Jail - Common Area	1		1	14VP3L T8 NL	88	0.09	583.44	6630	1	4LED13W-3L			40	0.04	265.20	6630	0.05	318.24
JUV		HALL & SHOWER	Jail - Inmate Holding or Living	5		5	4VP2L T8	58	0.29	1922.70	6630	5	4LED13W-2L			26	0.13	861.90	6630	0.16	1060.80
JUV		HALL & SHOWER	EMERGENCY LIGHTING	2		2	RLED	3	0.01	39.78	6630	0	DNR			0	0.01	39.78	6630	0.00	0.00
JUV	8	ISO ROOM	Jail - Inmate Holding or Living	1		1	14VP3L T8 NL	88	0.09	583.44	6630	1	4LED13W-3L			40	0.04	265.20	6630	0.05	318.24
JUV	7	ISO ROOM	Jail - Inmate Holding or Living	1		1	14VP3L T8 NL	88	0.09	583.44	6630	1	4LED13W-3L			40	0.04	265.20	6630	0.05	318.24
JUV	6	ISO ROOM	Jail - Inmate Holding or Living	1		1	14VP3L T8 NL	88	0.09	583.44	6630	1	4LED13W-3L			40	0.04	265.20	6630	0.05	318.24
JUV	5	ISO ROOM	Jail - Inmate Holding or Living	1		1	14VP3L T8 NL	88	0.09	583.44	6630	1	4LED13W-3L			40	0.04	265.20	6630	0.05	318.24
JUV	4	ISO ROOM	Jail - Inmate Holding or Living	1		1	14VP3L T8 NL	88	0.09	583.44	6630	1	4LED13W-3L			40	0.04	265.20	6630	0.05	318.24
JUV	3	ISO ROOM	Jail - Inmate Holding or Living	1		1	14VP3L T8 NL	88	0.09	583.44	6630	1	4LED13W-3L			40	0.04	265.20	6630	0.05	318.24
JUV	2	ISO ROOM	Jail - Inmate Holding or Living	1		1	14VP3L T8 NL	88	0.09	583.44	6630	1	4LED13W-3L			40	0.04	265.20	6630	0.05	318.24
JUV	1	ISO ROOM	Jail - Inmate Holding or Living	1		1	14VP3L T8 NL	88	0.09	583.44	6630	1	4LED13W-3L			40	0.04	265.20	6630	0.05	318.24
JUV		STAFF RR	Jail - Staff RR	1		1	4W2L T8	59	0.06	391.17	6630	1	4LED13W-2L			26	0.03	172.38	6630	0.03	218.79
JUV		DREC HALL	Jail - Common Area	4		4	4VP2L T8	58	0.23	1538.16	6630	4	4LED13W-2L			26	0.10	689.52	6630	0.13	848.64
JUV		UNI STORAGE	Jail - Secured Storage	2		2	4W2L T8	59	0.12	782.34	6630	2	4LED13W-2L			26	0.05	344.76	6630	0.07	437.58
JUV		ED CENTER HALL	Jail - Support Area	9		9	24TP4L T8	115	1.04	6862.05	6630	9	4LED18W-2L 24B			37	0.33	2207.79	6630	0.70	4654.26
JUV		ED CENTER HALL	EMERGENCY LIGHTING	2		2	RLED	3	0.01	39.78	6630	0	DNR			0	0.01	39.78	6630	0.00	0.00
JUV	1	CR	Jail - Classroom	5		5	24TP4L T8	115	0.58	3812.25	6630	5	4LED18W-2L 24B			37	0.19	1226.55	6630	0.39	2585.70
JUV	1	CR STORAGE	Storage Room	1		1	24TP4L T8	115	0.12	762.45	6630	1	4LED13W-2L 24B			26	0.03	172.38	6630	0.09	590.07
JUV	2	CR	Jail - Classroom	5		5	24TP4L T8	115	0.58	3812.25	6630	5	4LED18W-2L 24B			37	0.19	1226.55	6630	0.39	2585.70
JUV	2	CR STORAGE	Storage Room	1		1	24TP4L T8	115	0.12	762.45	6630	1	4LED13W-2L 24B			26	0.03	172.38	6630	0.09	590.07

JUV	3	CR	Jail - Classroom	5		5	24TP4L T8	115	0.58	3812.25	6630	5	4LED18W-2L 24B			37	0.19	1226.55	6630	0.39	2585.70
JUV	3	CR STORAGE	Storage Room	1		1	24TP4L T8	115	0.12	762.45	6630	1	4LED13W-2L 24B			26	0.03	172.38	6630	0.09	590.07
JUV		WRR	Jail - Support Area	1		1	4W2L T8	59	0.06	391.17	6630	1	4LED13W-2L			26	0.03	172.38	6630	0.03	218.79
JUV		MRR	Jail - Support Area	1		1	4W2L T8	59	0.06	391.17	6630	1	4LED13W-2L			26	0.03	172.38	6630	0.03	218.79
JUV	4	CR	Jail - Classroom	5		5	24TP4L T8	115	0.58	3812.25	6630	5	4LED18W-2L 24B			37	0.19	1226.55	6630	0.39	2585.70
JUV	5	CR STORAGE	Storage Room	1		1	24TP4L T8	115	0.12	762.45	6630	1	4LED13W-2L 24B			26	0.03	172.38	6630	0.09	590.07
JUV	6	OFF AREA	Jail - Support Area	2		2	24TP4L T8	115	0.23	1524.90	6630	2	4LED18W-2L 24B			37	0.07	490.62	6630	0.16	1034.28
JUV	6	COPY AREA	Jail - Support Area	2		2	24TP4L T8	115	0.23	1524.90	6630	2	4LED18W-2L 24B			37	0.07	490.62	6630	0.16	1034.28
JUV	6	COPY AREA RR	Jail - Support Area	1		1	4W2L T8	59	0.06	391.17	6630	1	4LED13W-2L			26	0.03	172.38	6630	0.03	218.79
JUV	5	OFF AREA	Jail - Support Area	3		3	24TP4L T8	115	0.35	2287.35	6630	3	4LED18W-2L 24B			37	0.11	735.93	6630	0.23	1551.42
JUV	5	OFF AREA CONF	Jail - Support Area	2		2	24TP4L T8	115	0.23	1524.90	6630	2	4LED18W-2L 24B			37	0.07	490.62	6630	0.16	1034.28
JUV		CHARLIE DORM ENTRY	Jail - Inmate Holding or Living	1		1	4W2L T8	59	0.06	391.17	6630	1	4LED13W-2L			26	0.03	172.38	6630	0.03	218.79
JUV		CHARLIE DORM OFF	Jail - Inmate Holding or Living	1		1	24TP4L T8	115	0.12	762.45	6630	1	4LED18W-2L 24B			37	0.04	245.31	6630	0.08	517.14
JUV		CHARLIE DORM AREA	Jail - Inmate Holding or Living	18		18	4VP2L T8	58	1.04	6921.72	6630	18	4LED15W-2L			31	0.56	3699.54	6630	0.49	3222.18
JUV		CHARLIE DORM AREA STOR	Jail - Inmate Holding or Living	1		1	4VP2L T8	58	0.06	384.54	6630	1	4LED13W-2L			26	0.03	172.38	6630	0.03	212.16
JUV		DELTA ENTRY	Jail - Inmate Holding or Living	1		1	4VP2L T8	58	0.06	384.54	6630	1	4LED13W-2L			26	0.03	172.38	6630	0.03	212.16
JUV		DELTA OFF	Jail - Inmate Holding or Living	1		1	4W2L T8	59	0.06	391.17	6630	1	4LED15W-2L			31	0.03	205.53	6630	0.03	185.64
JUV		DELTA POD	Jail - Inmate Holding or Living	15		15	4W2L T8	59	0.89	5867.55	6630	15	4LED15W-2L			31	0.47	3082.95	6630	0.42	2784.60
JUV		DELTA POD STOR	Jail - Inmate Holding or Living	1		1	4W2L T8	59	0.06	391.17	6630	1	4LED13W-2L			26	0.03	172.38	6630	0.03	218.79
JUV		ECHO ENTRY	Jail - Inmate Holding or Living	1		1	4VP2L T8	58	0.06	384.54	6630	1	4LED13W-2L			26	0.03	172.38	6630	0.03	212.16
JUV		ECHO OFF	Jail - Inmate Holding or Living	1		1	24TP4L T8	115	0.12	762.45	6630	1	4LED18W-2L 24B			37	0.04	245.31	6630	0.08	517.14
JUV		ECHO POD	Jail - Inmate Holding or Living	16		16	24TP4L T8	115	1.84	12199.20	6630	16	4LED18W-2L 24B			37	0.59	3924.96	6630	1.25	8274.24
JUV		OUTTER REC VESTIBULE	Jail - Outdoor REC	1		1	24TP4L T8	115	0.12	762.45	6630	1	4LED18W-2L 24B			37	0.04	245.31	6630	0.08	517.14
JUV		OUTTER REC OFF	Jail - Support Area	1		1	4W2L T8	59	0.06	391.17	6630	1	4LED15W-2L			31	0.03	205.53	6630	0.03	185.64
JUV		OUTTER REC OFF	Jail - Support Area	1		1	4W2L T8	59	0.06	391.17	6630	1	4LED13W-2L			26	0.03	172.38	6630	0.03	218.79
JUV		FOXTROT ENTRY	Jail - Inmate Holding or Living	1		1	4VP2L T8	58	0.06	384.54	6630	1	4LED13W-2L			26	0.03	172.38	6630	0.03	212.16
JUV		FOXTROT ENTRY OFF	Jail - Inmate Holding or Living	1		1	24TP4L T8	115	0.12	762.45	6630	1	4LED18W-2L 24B			37	0.04	245.31	6630	0.08	517.14
JUV		FOXTROT POD	Jail - Inmate Holding or Living	15		15	4VP2L T8	58	0.87	5768.10	6630	15	4LED13W-2L			26	0.39	2585.70	6630	0.48	3182.40
JUV		RR BY FOXTROT	Jail - Inmate Holding or Living	1		1	4W4L T8	115	0.12	762.45	6630	1	4LED15W-4L			61	0.06	404.43	6630	0.05	358.02
JUV		RR BY FOXTROT	Jail - Inmate Holding or Living	1		1	4W4L T8	115	0.12	762.45	6630	1	4LED15W-4L			61	0.06	404.43	6630	0.05	358.02
JUV		GOLF POD ENTRY	Jail - Inmate Holding or Living	1		1	4VP2L T8	58	0.06	384.54	6630	1	4LED13W-2L			26	0.03	172.38	6630	0.03	212.16
JUV		GOLF POD ENTRY STOR	Jail - Inmate Holding or Living	1		1	4W4L T8	115	0.12	762.45	6630	1	4LED15W-4L			61	0.06	404.43	6630	0.05	358.02
JUV		GOLF POD ENTRY STOR N	Jail - Inmate Holding or Living	1		1	24TP4L TB	115	0.12	762.45	6630	1	4LED18W-2L 24B			37	0.04	245.31	6630	0.08	517.14
JUV		GOLF POD OPEN	Jail - Inmate Holding or Living	9		9	4VP2L T8	58	0.52	3460.86	6630	9	4LED13W-2L			26	0.23	1551.42	6630	0.29	1909.44
JUV		GOLF POD SLEEPING	Jail - Inmate Holding or Living	8		8	14VP3L T8 NL	88	0.70	4667.52	6630	8	4LED13W-3L			40	0.32	2121.60	6630	0.38	2545.92
JUV		PVT OFF	Jail - Support Area	1		1	24TP4L T8	115	0.12	762.45	6630	1	4LED18W-2L 24B			37	0.04	245.31	6630	0.08	517.14
JUV		GYM AREA	Jail - Gym Area	6		6	WP MH-400	453	2.72	18020.34	6630	6	NF WPLED80W			81	0.49	3222.18	6630	2.23	14798.16
JUV		GYM AREA	Jail - Gym Area	6		6	WP MH-400	453	2.72	18020.34	6630	6	NF WPLED80W			81	0.49	3222.18	6630	2.23	14798.16
JUV		GYM AREA	Jail - Gym Area	2		2	4VP2L T8	58	0.12	769.08	6630	2	4LED13W-2L			26	0.05	344.76	6630	0.06	424.32
JUV		GYM AREA	Jail - Gym Area	2	2	0	8S2L	110	0.00	0.00	6630	2	REMOVE			0	0.00	0.00	6630	0.00	0.00
JUV		GYM AREA STORAGE	Storage Room	1		1	4S2L T8	59	0.06	391.17	6630	1	REMOVE			0	0.06	391.17	6630	0.00	0.00
JUV		GYM AREA RR	Jail - Gym Area	2		2	4W2L T8	59	0.12	782.34	6630	2	REMOVE			0	0.12	782.34	6630	0.00	0.00
JUV		KITCHEN HALL	Jail - Support Area	3		3	24TP4L T8	115	0.35	2287.35	6630	3	4LED18W-2L 24B			37	0.11	735.93	6630	0.23	1551.42
JUV		KITCHEN	Jail - Support Area	14		14	24TP4L T8	115	1.61	10674.30	6630	14	4LED18W-2L 24B			37	0.52	3434.34	6630	1.09	7239.96
JUV		KITCHEN VENT HOOD	Jail - Support Area	9		9	JJ CFL-13	13	0.12	775.71	6630	9	LEDA-4W			4	0.04	238.68	6630	0.08	537.03
JUV		KITCHEN OFF	Jail - Support Area	1		1	24TP4L T8	115	0.12	762.45	6630	1	4LED18W-2L 24B			37	0.04	245.31	6630	0.08	517.14
JUV		KITCHEN DRY STOR	Jail - Support Area	3		3	4W2L T8	59	0.18	1173.51	6630	3	4LED13W-2L			26	0.08	517.14	6630	0.10	656.37
JUV		KITCHEN RR	Jail - Support Area	1		1	24TP4L T8	115	0.12	762.45	6630	1	4LED18W-2L 24B			37	0.04	245.31	6630	0.08	517.14
JUV		KITCHEN RECEIVING	Jail - Support Area	3		3	24TP4L T8	115	0.35	2287.35	6630	3	4LED18W-2L 24B			37	0.11	735.93	6630	0.23	1551.42
JUV		KITCHEN RECEIVING	EMERGENCY LIGHTING	1		1	RLED	3	0.00	19.89	6630	0	DNR			0	0.00	19.89	6630	0.00	0.00
JUV		KITCHEN RECEIVING OFF	Jail - Support Area	2		2	24TP4L T8	115	0.23	1524.90	6630	2	4LED18W-2L 24B			37	0.07	490.62	6630	0.16	1034.28
JUV		LAUNDRY	Jail - Support Area	3		3	24TP4L T8	115	0.35	2287.35	6630	3	4LED18W-2L 24B			37	0.11	735.93	6630	0.23	1551.42
JUV		LAUNDRY STORAGE	Jail - Support Area	1		1	24TP4L T8	115	0.12	762.45	6630	1	4LED18W-2L 24B			37	0.04	245.31	6630	0.08	517.14
JUV		OFF LIBRARY	Jail - Support Area	2		2	24TP4L T8	115	0.23	1524.90	6630	2	4LED18W-2L 24B			37	0.07	490.62	6630	0.16	1034.28
JUV		OFF LIBRARY PVT	Jail - Support Area	1		1	24TP4L T8	115	0.12	762.45	6630	1	4LED18W-2L 24B			37	0.04	245.31	6630	0.08	517.14
JUV		BRAVO ENTRY	Jail - Inmate Holding or Living	1		1	4VP2L T8	58	0.06	384.54	6630	1	4LED13W-2L			26	0.03	172.38	6630	0.03	212.16
JUV		BRAVO ENTRY OFF	Jail - Inmate Holding or Living	1		1	24TP4L T8	115	0.12	762.45	6630	1	4LED18W-2L 24B			37	0.04	245.31	6630	0.08	517.14
JUV		BRAVO POD	Jail - Inmate Holding or Living	9		9	4VP2L T8	58	0.52	3460.86	6630	9	4LED15W-2L			31	0.28	1849.77	6630	0.24	1611.09
JUV		BRAVO POD STOR	Jail - Inmate Holding or Living	1		1	4W2L T8	59	0.06	391.17	6630	1	4LED13W-2L			26	0.03	172.38	6630	0.03	218.79
JUV		BRAVO POD RR	Jail - Inmate Holding or Living	1		1	4VP2L T8	58	0.06	384.54	6630	1	4LED13W-2L			26	0.03	172.38	6630	0.03	212.16
JUV		BRAVO POD RR	Jail - Inmate Holding or Living	1		1	4VP2L T8	58	0.06	384.54	6630	1	4LED13W-2L			26	0.03	172.38	6630	0.03	212.16
JUV		BRAVO 2 HALL	Jail - Inmate Holding or Living	4		4	4VP2L T8	58	0.23	1538.16	6630	4	4LED15W-2L			31	0.12	822.12	6630	0.11	716.04
JUV	1	BRAVO 2 CELL	Jail - Inmate Holding or Living	4		4	14VP2L T8 NL	58	0.23	1538.16	6630	4	4LED15W-2L			31	0.12	822.12	6630	0.11	716.04
JUV	2	BRAVO 2 CELL	Jail - Inmate Holding or Living	4		4	14VP2L T8 NL	58	0.23	1538.16	6630	4	4LED15W-2L			31	0.12	822.12	6630	0.11	716.04
JUV	3	BRAVO 2 CELL	Jail - Inmate Holding or Living	4		4	14VP2L T8 NL	58	0.23	1538.16	6630	4	4LED15W-2L			31	0.12	822.12	6630	0.11	716.04
JUV	4	BRAVO 2 CELL	Jail - Inmate Holding or Living	4		4	14VP2L T8 NL	58	0.23	1538.16	6630	4	4LED15W-2L			31	0.12	822.12	6630	0.11	716.04
JUV	5	BRAVO 2 CELL	Jail - Inmate Holding or Living	4		4	14VP2L T8 NL	58	0.23	1538.16	6630	4	4LED15W-2L			31	0.12	822.12	6630	0.11	716.04
JUV	6	BRAVO 2 CELL	Jail - Inmate Holding or Living	4		4	14VP2L T8 NL	58	0.23	1538.16	6630	4	4LED15W-2L			31	0.12	822.12	6630	0.11	716.04
JUV	7	BRAVO 2 CELL	Jail - Inmate Holding or Living	4		4	14VP2L T8 NL	58	0.23	1538.16	6630	4	4LED15W-2L			31	0.12	822.12	6630	0.11	716.04
JUV	8	BRAVO 2 CELL	Jail - Inmate Holding or Living	4		4	14VP2L T8 NL	58	0.23	1538.16	6630	4	4LED15W-2L			31	0.12	822.12	6630	0.11	716.04
JUV		SHOWER AREA	Jail - Inmate Holding or Living	1		1	4VP2L T8	58	0.06	384.54	6630	1	4LED13W-2L			26	0.03	172.38	6630	0.03	212.16
JUV		SHOWER AREA STOR	Jail - Inmate Holding or Living	1		1	4W2L T8	59	0.06	391.17	6630	1	4LED13W-2L			26	0.03	172.38	6630	0.03	218.79
JUV		BRAVO 1 HALL	Jail - Inmate Holding or Living	5		5	4VP2L T8	58	0.29	1922.70	6630	5	4LED13W-2L			26	0.13	861.90	6630	0.16	1060.80
JUV	8	BRAVO 1 CELL	Jail - Inmate Holding or Living	1		1	14VP2L T8 NL	58	0.06	384.54	6630	1	4LED15W-2L			31	0.03	205.53	6630	0.03	179.01

JUV	7	BRAVO 1 CELL	Jail - Inmate Holding or Living	1		1	14VP2L T8 NL	58	0.06	384.54	6630	1	4LED15W-2L			31	0.03	205.53	6630	0.03	179.01
JUV	6	BRAVO 1 CELL	Jail - Inmate Holding or Living	1		1	14VP2L T8 NL	58	0.06	384.54	6630	1	4LED15W-2L			31	0.03	205.53	6630	0.03	179.01
JUV	6	BRAVO 1 CELL	Jail - Inmate Holding or Living	1		1	14VP2L T8 NL	58	0.06	384.54	6630	1	4LED15W-2L			31	0.03	205.53	6630	0.03	179.01
JUV	5	BRAVO 1 CELL	Jail - Inmate Holding or Living	1		1	14VP2L T8 NL	58	0.06	384.54	6630	1	4LED15W-2L			31	0.03	205.53	6630	0.03	179.01
JUV	4	BRAVO 1 CELL	Jail - Inmate Holding or Living	1		1	14VP2L T8 NL	58	0.06	384.54	6630	1	4LED15W-2L			31	0.03	205.53	6630	0.03	179.01
JUV	3	BRAVO 1 CELL	Jail - Inmate Holding or Living	1		1	14VP2L T8 NL	58	0.06	384.54	6630	1	4LED15W-2L			31	0.03	205.53	6630	0.03	179.01
JUV	2	BRAVO 1 CELL	Jail - Inmate Holding or Living	1		1	14VP2L T8 NL	58	0.06	384.54	6630	1	4LED15W-2L			31	0.03	205.53	6630	0.03	179.01
JUV	1	BRAVO 1 CELL	Jail - Inmate Holding or Living	1		1	14VP2L T8 NL	58	0.06	384.54	6630	1	4LED15W-2L			31	0.03	205.53	6630	0.03	179.01
JUV		ISO2	Jail - Inmate Holding or Living	1		1	14VP2L T8	58	0.06	384.54	6630	1	4LED15W-2L			31	0.03	205.53	6630	0.03	179.01
JUV		MECH BY ISO 2	Mechanical/Electrical Room	1		1	4S2L T8	59	0.06	391.17	6630	1	4LED13W-2L			26	0.03	172.38	6630	0.03	218.79
JUV		INTAKE HALL	Jail - Common Area	8		8	24TP4L T8	115	0.92	6099.60	6630	8	4LED18W-2L 24B			37	0.30	1962.48	6630	0.62	4137.12
JUV		NURSE EXAM RM	Jail - Common Area	2		2	4W2L T8	59	0.12	782.34	6630	2	4LED15W-2L			31	0.06	411.06	6630	0.06	371.28
JUV		NURSE EXAM OFF	Jail - Support Area	1		1	4W2L T8	59	0.06	391.17	6630	1	4LED15W-2L			31	0.03	205.53	6630	0.03	185.64
JUV		NURSE EXAM OFF STOR	Storage Room	1		1	4S2L T8	59	0.06	391.17	6630	1	4LED13W-2L			26	0.03	172.38	6630	0.03	218.79
JUV		PROPERTY RM	Storage Room	4		4	4W2L T8	59	0.24	1564.68	6630	4	4LED13W-2L			26	0.10	689.52	6630	0.13	875.16
JUV		INTAKE SHOWER	Jail - Inmate Holding or Living	2		2	4W2L T8	59	0.12	782.34	6630	2	4LED13W-2L			26	0.05	344.76	6630	0.07	437.58
JUV	2	HOLDING RM	Jail - Inmate Holding or Living	1		1	14VP2L T8 NL	58	0.06	384.54	6630	1	4LED13W-2L			26	0.03	172.38	6630	0.03	212.16
JUV	1	HOLDING RM	Jail - Inmate Holding or Living	1		1	14VP2L T8 NL	58	0.06	384.54	6630	1	4LED13W-2L			26	0.03	172.38	6630	0.03	212.16
JUV	1	SALLY VEST	Jail - Common Area	1		1	24TP4L T8	115	0.12	762.45	6630	1	4LED18W-2L 24B			37	0.04	245.31	6630	0.08	517.14
JUV		CADRE RR	Jail - Common Area	1		1	4W2L T8	59	0.06	391.17	6630	1	4LED13W-2L			26	0.03	172.38	6630	0.03	218.79
JUV		UNI STORAGE	Storage Room	1		1	4W2L T8	59	0.06	391.17	6630	1	4LED13W-2L			26	0.03	172.38	6630	0.03	218.79
JUV		NC VISIT RM	Jail - Common Area	1		1	4W2L T8	59	0.06	391.17	6630	1	4LED13W-2L			26	0.03	172.38	6630	0.03	218.79
JUV	2	NC VISIT RM	Jail - Common Area	1		1	4W2L T8	59	0.06	391.17	6630	1	4LED13W-2L			26	0.03	172.38	6630	0.03	218.79
JUV		OUTER EDU EXT	Exterior Lighting - Area	2		2	WP HPS-250	295	0.59	3911.70	6630	2	NF WPLED60W			61	0.12	808.86	6630	0.47	3102.84
JUV		OUTER EDU EXT N	Exterior Lighting - Area	5		5	WP HPS-250	295	1.48	9779.25	6630	5	NF WPLED60W			61	0.31	2022.15	6630	1.17	7757.10
JUV		OUTER EDU EXT END	Exterior Lighting - Area	3		3	WP HPS-250	295	0.89	5867.55	6630	3	NF WPLED60W			61	0.18	1213.29	6630	0.70	4654.26
JUV		OUTER EDU EXT SOUTH	Exterior Lighting - Area	8		8	WP HPS-250	295	2.36	15646.80	6630	8	NF WPLED60W			61	0.49	3235.44	6630	1.87	12411.36
JUV		EXT MECHS X8	Mechanical/Electrical Room	8		8	8S2L T8	110	0.88	5834.40	6630	8	4LED2L-13W 8CK			27	0.22	1432.08	6630	0.66	4402.32
JUV		PARKING	Exterior Lighting - Area	4		4	POLE MH-400	453	1.81	12013.56	6630	4	NF SBLED-160W			161	0.64	4269.72	6630	1.17	7743.84
JUV		GED BLDG	General Work Area	36		36	24TP4L T8	115	4.14	27448.20	6630	36	4LED18W-2L 24B			37	1.33	8831.16	6630	2.81	18617.04
JUV		GED BLDG	EMERGENCY LIGHTING	1		1	RLED	3	0.00	19.89	6630	0	DNR			0	0.00	19.89	6630	0.00	0.00
JUV		GED BLDG	Exterior Lighting - Area	2		2	WPCFL1X23	27	0.05	358.02	6630	2	NF WPLED20W			20	0.04	265.20	6630	0.01	92.82
PC2		ENTRY LOBBY	Common Areas & Hallways	16	3	13	CF1X32	32	0.42	1554.59	3737	16	LEDPLP1X12			12	0.19	717.50	3737	0.22	837.09
PC2		ENTRY LOBBY	EMERGENCY LIGHTING	4		4	RLED	3	0.01	44.84	3737	0	DNR			0	0.01	44.84	3737	0.00	0.00
PC2		SE HALLWAY	Common Areas & Hallways	12	6	6	CF1X32	32	0.19	717.50	3737	12	LEDPLP1X12			12	0.14	538.13	3737	0.05	179.38
PC2		SE HALLWAY	EMERGENCY LIGHTING	2		2	RLED	3	0.01	22.42	3737	0	DNR			0	0.01	22.42	3737	0.00	0.00
PC2		SE HALLWAY WW	Common Areas & Hallways	6		6	WM 4RND2L T8	58	0.35	1300.48	3737	12	4LED13W-2L			26	0.31	1165.94	3737	0.04	134.53
PC2		NE HALLWAY	Common Areas & Hallways	4		4	24PB2L T8	59	0.24	881.93	3737	4	4LED13W-2L			26	0.10	388.65	3737	0.13	493.28
PC2		NE HALLWAY	EMERGENCY LIGHTING	1		1	RLED	3	0.00	11.21	3737	0	DNR			0	0.00	11.21	3737	0.00	0.00
PC2		NW HALLWAY	Common Areas & Hallways	2		2	24PB2L T8	59	0.12	440.97	3737	2	4LED13W-2L			26	0.05	194.32	3737	0.07	246.64
PC2		NW HALLWAY	EMERGENCY LIGHTING	1		1	RLED	3	0.00	11.21	3737	0	DNR			0	0.00	11.21	3737	0.00	0.00
PC2	187	TAX OFF	General Work Area	11		11	24PB2L T8	59	0.65	2425.31	3737	11	4LED18W-2L			37	0.41	1520.96	3737	0.24	904.35
PC2	187	TAX OFF	EMERGENCY LIGHTING	1		1	RLED	3	0.00	11.21	3737	0	DNR			0	0.00	11.21	3737	0.00	0.00
PC2	187	TAX OFF PVT OFF	General Work Area	4		4	24PB2L T8	59	0.24	881.93	3737	4	4LED18W-2L			37	0.15	553.08	3737	0.09	328.86
PC2	178	CONSTIBULES OFF	General Work Area	12		12	24PB2L T8	59	0.71	2645.80	3737	12	4LED18W-2L			37	0.44	1659.23	3737	0.26	986.57
PC2	175	CONSTIBULES OFF PVT	General Work Area	4		4	24PB2L T8	59	0.24	881.93	3737	4	4LED18W-2L			37	0.15	553.08	3737	0.09	328.86
PC2	169	CORT ROOM ENTRY	Common Areas & Hallways	1		1	24PB2L T8	59	0.06	220.48	3737	1	4LED13W-2L			26	0.03	97.16	3737	0.03	123.32
PC2	170	COURT ROOM	Court Room Area	14		14	CHD CFL4X23	92	1.29	4813.26	3737	14	LEDPL4X10			40	0.56	2092.72	3737	0.73	2720.54
PC2	170	COURT ROOM SOFFIT	Court Room Area	25		25	4S2L T8	59	1.48	5512.08	3737	25	4LED13W-2L			26	0.65	2429.05	3737	0.83	3083.03
PC2		HALL TO JURY ROOM	Court Room Area	2		2	24PB2L T8	59	0.12	440.97	3737	2	4LED18W-2L			37	0.07	276.54	3737	0.04	164.43
PC2	167	JURY ROOM	Jury Room	2		2	24PB2L T8	59	0.12	220.48	1869	2	4LED18W-2L			37	0.07	138.27	1869	0.04	82.21
PC2	167	JURY ROOM RR	Jury Room	1		1	2RND2L T8	33	0.03	61.66	1869	1	2LED10W-2L			20	0.02	37.37	1869	0.01	24.29
PC2	167	JURY ROOM RR	Jury Room	1		1	RCFL2X18	40	0.04	74.74	1869	1	LEDPL2X9			18	0.02	33.63	1869	0.02	41.11
PC2		JOP GEN WK AREA	General Work Area	8		8	24PB2L T8	59	0.47	1763.86	3737	8	4LED18W-2L			37	0.30	1106.15	3737	0.18	657.71
PC2		JOP GEN WK AREA BACK	General Work Area	2		2	24PB2L T8	59	0.12	440.97	3737	2	4LED18W-2L			37	0.07	276.54	3737	0.04	164.43
PC2	164	JUDGES OFF	PRIVATE OFFICE	4		4	24PB2L T8	59	0.24	440.97	1869	4	4LED18W-2L			37	0.15	276.54	1869	0.09	164.43
PC2		JUDGES RR	PRIVATE RESTROOM	1		1	2RND2L T8	33	0.03	61.66	1869	1	2LED10W-2L			20	0.02	37.37	1869	0.01	24.29
PC2		JUDGES RR	PRIVATE RESTROOM	1		1	RCFL2X18	40	0.04	74.74	1869	1	LEDPL2X9			18	0.02	33.63	1869	0.02	41.11
PC2	164	FILE ROOM	General Work Area	4		4	24PB2L T8	59	0.24	440.97	1869	4	4LED18W-2L			37	0.15	276.54	1869	0.09	164.43
PC2	161	CLERKS OFF	PRIVATE OFFICE	4		4	24PB2L T8	59	0.24	440.97	1869	4	4LED18W-2L			37	0.15	276.54	1869	0.09	164.43
PC2		HALL TO EXT	Common Areas & Hallways	2		2	24PB2L T8	59	0.12	440.97	3737	2	4LED13W-2L			26	0.05	194.32	3737	0.07	246.64
PC2		HALL TO EXT	EMERGENCY LIGHTING	1		1	R2L	40	0.04	149.48	3737	1	NFRLED			3	0.00	11.21	3737	0.04	138.27
PC2		HALL SHERIFFS	Common Areas & Hallways	6	1	5	24PB2L T8	59	0.30	1102.42	3737	6	4LED13W-2L			26	0.16	582.97	3737	0.14	519.44
PC2		HALL SHERIFFS	EMERGENCY LIGHTING	2		2	RLED	3	0.01	22.42	3737	0	DNR			0	0.01	22.42	3737	0.00	0.00
PC2	148	PVT OFF SHERIFFS	PRIVATE OFFICE	2		2	24PB2L	72	0.14	269.06	1869	2	4LED18W-2L			37	0.07	138.27	1869	0.07	130.80
PC2	147	PVT OFF SHERIFFS	PRIVATE OFFICE	2		2	24PB2L	72	0.14	269.06	1869	2	4LED18W-2L			37	0.07	138.27	1869	0.07	130.80
PC2	146	PVT OFF SHERIFFS	PRIVATE OFFICE	2		2	24PB2L	72	0.14	269.06	1869	2	4LED18W-2L			37	0.07	138.27	1869	0.07	130.80
PC2		OPEN OFFICE AREA	General Work Area	6		6	24PB2L T8	59	0.35	1322.90	3737	6	4LED18W-2L			37	0.22	829.61	3737	0.13	493.28
PC2	151	PVT OFF SHERIFFS	PRIVATE OFFICE	2		2	24PB2L	72	0.14	269.06	1869	2	4LED18W-2L			37	0.07	138.27	1869	0.07	130.80
PC2	150	INTERVIEW RM	INTERVIEW ROOM	2		2	24PB2L	72	0.14	269.06	1869	2	4LED18W-2L			37	0.07	138.27	1869	0.07	130.80
PC2	150	STORAGE CLOSET	Storage Room	1		1	24PB2L	72	0.07	134.53	1869	1	4LED13W-2L			26	0.03	48.58	1869	0.05	85.95
PC2	153	SHERIFFS LOBBY	General Work Area	2		2	24PB2L T8	59	0.12	440.97	3737	2	4LED18W-2L			37	0.07	276.54	3737	0.04	164.43
PC2		SHERIFFS LOBBY	EMERGENCY LIGHTING	1		1	RLED	3	0.00	11.21	3737	0	DNR			0	0.00	11.21	3737	0.00	0.00
PC2	136	BREAK RM	Break & Loung Areas	6		6	24PB2L T8	59	0.35	661.45	1869	6	4LED13W-2L			26	0.16	291.49	1869	0.20	369.96

PC2	136	BREAK RM	EMERGENCY LIGHTING	2		2	RLED	3	0.01	22.42	3737	0	DNR			0	0.01	22.42	3737	0.00	0.00
PC2	133	MECH ROOM	Mechanical/Electrical Room	4		4	4S2L T8	59	0.24	881.93	3737	4	4LED13W-2L	1	WCM-OCC	26	0.10	272.05	2616	0.13	609.88
PC2	130	EMPLOYEE RR	Common Restroom	1		1	2RND2L T8	33	0.03	61.66	1869	1	2LED10W-2L			20	0.02	37.37	1869	0.01	24.29
PC2	130	EMPLOYEE RR	Common Restroom	1		1	RCFL2X18	40	0.04	74.74	1869	1	LEDPL2X9			18	0.02	33.63	1869	0.02	41.11
PC2	129	EMPLOYEE RR	Common Restroom	1		1	2RND2L T8	33	0.03	61.66	1869	1	2LED10W-2L			20	0.02	37.37	1869	0.01	24.29
PC2	129	EMPLOYEE RR	Common Restroom	1		1	RCFL2X18	40	0.04	74.74	1869	1	LEDPL2X9			18	0.02	33.63	1869	0.02	41.11
PC2		IT CLOSET CORNER	Mechanical/Electrical Room	1		1	4S2L T8	59	0.06	220.48	3737	1	4LED13W-2L			26	0.03	97.16	3737	0.03	123.32
PC2	127	MRR	Common Restroom	5		5	RCFL2X18	40	0.20	373.70	1869	5	LEDPL2X9			18	0.09	168.17	1869	0.11	205.54
PC2	131	WRR	Common Restroom	5		5	RCFL2X18	40	0.20	373.70	1869	5	LEDPL2X9			18	0.09	168.17	1869	0.11	205.54
PC2	135	MECH ROOM	Mechanical/Electrical Room	4		4	4S2L T8	59	0.24	881.93	3737	4	4LED13W-2L			26	0.10	388.65	3737	0.13	493.28
PC2	120	GENERAL WK AREA	General Work Area	4		4	24TP2L T8	59	0.24	881.93	3737	4	4LED18W-2L			37	0.15	553.08	3737	0.09	328.86
PC2	125	PVT OFF	General Work Area	2		2	24TP2L T8	59	0.12	220.48	1869	2	4LED18W-2L			37	0.07	138.27	1869	0.04	82.21
PC2	124	PVT OFF	General Work Area	4		4	24TP2L T8	59	0.24	440.97	1869	4	4LED18W-2L			37	0.15	276.54	1869	0.09	164.43
PC2	118	PROBATION ENTRY	General Work Area	2		2	24PB2L T8	59	0.12	440.97	3737	2	4LED18W-2L			37	0.07	276.54	3737	0.04	164.43
PC2	118	PROBATION ENTRY	EMERGENCY LIGHTING	1		1	RLED	3	0.00	11.21	3737	0	DNR			0	0.00	11.21	3737	0.00	0.00
PC2		PROBATION WK AREA	General Work Area	11		11	24PB2L T8	59	0.65	2425.31	3737	11	4LED18W-2L			37	0.41	1520.96	3737	0.24	904.35
PC2		PROBATION WK AREA	EMERGENCY LIGHTING	3		3	RLED	3	0.01	33.63	3737	0	DNR			0	0.01	33.63	3737	0.00	0.00
PC2	129	UNI RR	Common Restroom	1		1	2RND2L T8	33	0.03	123.32	3737	1	2LED10W-2L			20	0.02	74.74	3737	0.01	48.58
PC2	129	UNI RR	Common Restroom	1		1	RCFL2X18	40	0.04	149.48	3737	1	LEDPL2X9			18	0.02	67.27	3737	0.02	82.21
PC2	119	UNI RR	Common Restroom	1		1	2RND2L T8	33	0.03	123.32	3737	1	2LED10W-2L			20	0.02	74.74	3737	0.01	48.58
PC2	129	UNI RR	Common Restroom	1		1	RCFL2X18	40	0.04	149.48	3737	1	LEDPL2X9			18	0.02	67.27	3737	0.02	82.21
PC2	112	PVT OFF	PRIVATE OFFICE	2		2	24PB2L T8	59	0.12	220.48	1869	2	4LED18W-2L			37	0.07	138.27	1869	0.04	82.21
PC2	111	PVT OFF	PRIVATE OFFICE	2		2	24PB2L T8	59	0.12	220.48	1869	2	4LED18W-2L			37	0.07	138.27	1869	0.04	82.21
PC2	109	PVT OFF	PRIVATE OFFICE	2		2	24PB2L T8	59	0.12	220.48	1869	2	4LED18W-2L			37	0.07	138.27	1869	0.04	82.21
PC2	104	PVT OFF	PRIVATE OFFICE	2		2	24PB2L T8	59	0.12	220.48	1869	2	4LED18W-2L			37	0.07	138.27	1869	0.04	82.21
PC2		MULTIPURP ROOM	General Work Area	6		6	24PB2L T8	59	0.35	661.45	1869	6	4LED18W-2L			37	0.22	414.81	1869	0.13	246.64
PC2		MULTIPURP ROOM STOR	General Work Area	1		1	4S2L T8	59	0.06	220.48	3737	1	4LED13W-2L			26	0.03	97.16	3737	0.03	123.32
PC2	105	PVT OFF	PRIVATE OFFICE	2		2	24PB2L T8	59	0.12	220.48	1869	2	4LED18W-2L			37	0.07	138.27	1869	0.04	82.21
PC2	106	PVT OFF	PRIVATE OFFICE	2		2	24PB2L T8	59	0.12	220.48	1869	2	4LED18W-2L			37	0.07	138.27	1869	0.04	82.21
PC2		CLOSET ACROSS FROM RR	Storage Room	1		1	24TP2L T8	59	0.06	220.48	3737	1	4LED13W-2L			26	0.03	97.16	3737	0.03	123.32
PC2		VESTIBULE SOUTH	Common Areas & Hallways	2		2	RCFL1X23	26	0.05	194.32	3737	2	LEDPLP1X12			12	0.02	89.69	3737	0.03	104.64
PC2		FRONT CANOPY	Exterior Lighting - Area	2		2	RCFL2X18	40	0.08	298.96	3737	2	LEDPL2X9			18	0.04	134.53	3737	0.04	164.43
PC2		FRONT WALKWAY	Exterior Lighting - Area	11		11	BOL MH-100	124	1.36	5097.27	3737	11	NF BOLLED-11W			11	0.12	452.18	3737	1.24	4645.09
PC2		FLAG LIGHTS	Exterior Lighting - Area	2		2	GM FL MH-250	288	0.58	2152.51	3737	2	NF FL LED-90W			91	0.18	680.13	3737	0.39	1472.38
PC2		BACK PARKING	Exterior Lighting - Area	7		7	POLE SB MH-250	288	2.02	7533.79	3737	7	NF SBLED-100W			101	0.71	2642.06	3737	1.31	4891.73
PC2		BACK CANOPY	Exterior Lighting - Area	1		1	RCFL2X18	40	0.04	149.48	3737	1	LEDPL2X9			18	0.02	67.27	3737	0.02	82.21
PC2		SIDE PARKING	Exterior Lighting - Area	5		5	POLE SB MH-250	288	1.44	5381.28	3737	5	NF SBLED-100W			101	0.51	1887.19	3737	0.94	3494.10
PC2		SIDE CANOPY	Exterior Lighting - Area	2		2	RCFL2X18	40	0.08	298.96	3737	2	LEDPL2X9			18	0.04	134.53	3737	0.04	164.43
PC2		FRONT PARKING	Exterior Lighting - Area	5		5	POLE SB MH-250	288	1.44	5381.28	3737	5	NF SBLED-100W			101	0.51	1887.19	3737	0.94	3494.10
PC2		EE CANOPY	Exterior Lighting - Area	1		1	RCFL2X18	40	0.04	149.48	3737	1	LEDPL2X9			18	0.02	67.27	3737	0.02	82.21
JWNC		FRONT AWNING	Exterior Lighting - Area	2		2	8S2L T8	110	0.22	822.14	3737	2	4LED4L-18W 8CK			37	0.07	276.54	3737	0.15	545.60
JWNC		ENTRY SHOP	Garage - General Work Area	12		12	8S2L T8	110	1.32	4932.84	3737	12	4LED4L-18W 8CK			37	0.44	1659.23	3737	0.88	3273.61
JWNC		OFFICES X3	PRIVATE OFFICE	8		8	4W2L T8	59	0.47	1763.86	3737	8	4LED13W-2L			26	0.21	777.30	3737	0.26	986.57
JWNC		SHOP SW	Garage - General Work Area	4		4	8S2L T8	110	0.44	1644.28	3737	4	4LED4L-18W 8CK			37	0.15	553.08	3737	0.29	1091.20
JWNC		ENTRY EXT	Exterior Lighting - Area	1		1	FM HPS-250	295	0.30	1102.42	3737	1	NF FL LED-90W			91	0.09	340.07	3737	0.20	762.35
GOV		OVER ELEV	Common Areas & Hallways	3		3	4ID1L T8	30	0.09	336.33	3737	3	4LED15W-1L			15	0.05	168.17	3737	0.05	168.17
GOV		OVER ELEV	Common Areas & Hallways	1		1	3ID1L T8	26	0.03	97.16	3737	1	3LED12W-1L			12	0.01	44.84	3737	0.01	52.32
GOV		ELEV LOBBY	Common Areas & Hallways	8		8	24ID3L T8	88	0.70	2630.85	3737	8	4LED13W-2L			26	0.21	777.30	3737	0.50	1853.55
GOV		CENTER LOBBY	Common Areas & Hallways	58		58	4ID2L T8	59	3.42	12788.01	3737	58	4LED15W-2L			31	1.80	6719.13	3737	1.62	6068.89
GOV		CENTER LOBBY	Common Areas & Hallways	24		24	RCFL1X42	42	1.01	3766.90	3737	24	CCK-22W			22	0.53	1973.14	3737	0.48	1793.76
GOV		RR LOBBY	Common Areas & Hallways	5		5	24ID3L T8	88	0.44	1644.28	3737	5	4LED13W-2L			26	0.13	485.81	3737	0.31	1158.47
GOV		RR LOBBY	EMERGENCY LIGHTING	2		2	EDL EXIT	20	0.04	149.48	3737	2	NF LEDEDL			1	0.00	7.47	3737	0.04	142.01
GOV		MRR	Common Restroom	6		6	4ID2L T8	59	0.35	1322.90	3737	6	4LED15W-2L			31	0.19	695.08	3737	0.17	627.82
GOV		MRR	Common Restroom	5		5	RCFL1X23	26	0.13	485.81	3737	5	LEDPLP1X12			12	0.06	224.22	3737	0.07	261.59
GOV		MRR SINKS	Common Restroom	6		6	WW PL2X9	23	0.14	515.71	3737	6	LEDPL2X9			18	0.11	403.60	3737	0.03	112.11
GOV		WRR	Common Restroom	6		6	4ID2L T8	59	0.35	1322.90	3737	6	4LED15W-2L			31	0.19	695.08	3737	0.17	627.82
GOV		WRR	Common Restroom	5		5	RCFL1X23	26	0.13	485.81	3737	5	LEDPLP1X12			12	0.06	224.22	3737	0.07	261.59
GOV		WRR SINKS	Common Restroom	6		6	WW PL2X9	23	0.14	515.71	3737	6	LEDPL2X9			18	0.11	403.60	3737	0.03	112.11
GOV		HALL FRONT COURT ROOMS	Common Areas & Hallways	80		80	24ID3L T8	88	7.04	26308.48	3737	80	4LED13W-2L			26	2.08	7772.96	3737	4.96	18535.52
GOV		HALL FRONT COURT ROOMS	EMERGENCY LIGHTING	9		9	ED EXITS	20	0.18	672.66	3737	9	NF LEDEDL			1	0.01	33.63	3737	0.17	639.03
GOV		END STAIRS LOBBY	Common Areas & Hallways	4		4	RCFL1X26	26	0.10	388.65	3737	4	LEDPLP1X12			12	0.05	179.38	3737	0.06	209.27
GOV		CR ENTRY CANOPY X8	Common Areas & Hallways	32		32	SQ RCFL1X9	14	0.45	1674.18	3737	32	LEDPL1X9			9	0.29	1076.26	3737	0.16	597.92
GOV	3204	COURT ROOM #10 ENTRY	Common Areas & Hallways	1		1	24ID2L T8	58	0.06	216.75	3737	1	4LED13W-2L			26	0.03	97.16	3737	0.03	119.58
GOV	3201	CONF RM	Conference & Meeting Rooms	2		2	24ID2L T8	58	0.12	216.75	1869	2	4LED15W-2L			31	0.06	115.85	1869	0.05	100.90
GOV	3203	CONF RM	Conference & Meeting Rooms	2		2	24ID2L T8	58	0.12	216.75	1869	2	4LED15W-2L			31	0.06	115.85	1869	0.05	100.90
GOV		COURT RM #10	Court Room Area	30		30	4ID2L T8	59	1.77	6614.49	3737	30	4LED18W-2L			37	1.11	4148.07	3737	0.66	2466.42
GOV		COURT RM #10	Court Room Area	22		22	14MW2L T8	58	1.28	4768.41	3737	22	4LED13W-2L			26	0.57	2137.56	3737	0.70	2630.85
GOV		COURT RM #10	Court Room Area	9		9	RCFL1X23	26	0.23	874.46	3737	9	LEDPLP1X12			12	0.11	403.60	3737	0.13	470.86
GOV	3216	INTERVIEW RM	Conference & Meeting Rooms	1		1	24ID2L T8	58	0.06	108.37	1869	1	4LED15W-2L			31	0.03	57.92	1869	0.03	50.45
GOV	3220	CONF RM	Conference & Meeting Rooms	2		2	24ID2L T8	58	0.12	216.75	1869	2	4LED15W-2L			31	0.06	115.85	1869	0.05	100.90
GOV	3221	CONF RM	Conference & Meeting Rooms	2		2	24ID2L T8	58	0.12	216.75	1869	2	4LED15W-2L			31	0.06	115.85	1869	0.05	100.90
GOV		COURT RM #9	Court Room Area	24		24	4ID2L T8	59	1.42	5291.59	3737	24	4LED18W-2L			37	0.89	3318.46	3737	0.53	1973.14
GOV		COURT RM #9	Court Room Area	10		10	14MW2L T8	58	0.58	2167.46	3737	10	4LED13W-2L			26	0.26	971.62	3737	0.32	1195.84
GOV		COURT RM #9	Court Room Area	9		9	RCFL1X23	26	0.23	874.46	3737	9	LEDPLP1X12			12	0.11	403.60	3737	0.13	470.86

GOV		COURT RM #9	EMERGENCY LIGHTING	2		2	EDL EXIT	20	0.04	149.48	3737	9	NF LEDEDL			1	0.01	33.63	3737	0.03	115.85
GOV	3240	COURT RECEPT	General Work Area	3		3	24ID3L T8	88	0.26	986.57	3737	3	4LED15W-2L			31	0.09	347.54	3737	0.17	639.03
GOV	3240	COURT RECEPT	EMERGENCY LIGHTING	1		1	EDL EXIT	20	0.02	74.74	3737	1	NF LEDEDL			1	0.00	3.74	3737	0.02	71.00
GOV	3256	COURT ENTRY	Common Areas & Hallways	1		1	24ID2L T8	58	0.06	216.75	3737	1	4LED13W-2L			26	0.03	97.16	3737	0.03	119.58
GOV	3258	CONF RM	Conference & Meeting Rooms	2		2	24ID2L T8	58	0.12	216.75	1869	2	4LED15W-2L			31	0.06	115.85	1869	0.05	100.90
GOV	3259	CONF RM	Conference & Meeting Rooms	2		2	24ID2L T8	58	0.12	216.75	1869	2	4LED15W-2L			31	0.06	115.85	1869	0.05	100.90
GOV		COURT RM #8	Court Room Area	24		24	4ID2L T8	59	1.42	5291.59	3737	24	4LED18W-2L			37	0.89	3318.46	3737	0.53	1973.14
GOV		COURT RM #8	Court Room Area	10		10	14MW2L T8	58	0.58	2167.46	3737	10	4LED13W-2L			26	0.26	971.62	3737	0.32	1195.84
GOV		COURT RM #8	Court Room Area	9		9	RCFL1X23	26	0.23	874.46	3737	9	LEDPLP1X12			12	0.11	403.60	3737	0.13	470.86
GOV		COURT RM #8	EMERGENCY LIGHTING	2		2	EDL EXIT	20	0.04	149.48	3737	9	NF LEDEDL			1	0.01	33.63	3737	0.03	115.85
GOV	3260	INTERVIEW RM	Conference & Meeting Rooms	1		1	24ID2L T8	58	0.06	108.37	1869	1	4LED15W-2L			31	0.03	57.92	1869	0.03	50.45
GOV	3278	CONF RM	Conference & Meeting Rooms	2		2	24ID2L T8	58	0.12	216.75	1869	2	4LED15W-2L			31	0.06	115.85	1869	0.05	100.90
GOV	3279	CONF RM	Conference & Meeting Rooms	2		2	24ID2L T8	58	0.12	216.75	1869	2	4LED15W-2L			31	0.06	115.85	1869	0.05	100.90
GOV		COURT RM #7	Court Room Area	24		24	4ID2L T8	59	1.42	5291.59	3737	24	4LED18W-2L			37	0.89	3318.46	3737	0.53	1973.14
GOV		COURT RM #7	Court Room Area	10		10	14MW2L T8	58	0.58	2167.46	3737	10	4LED13W-2L			26	0.26	971.62	3737	0.32	1195.84
GOV		COURT RM #7	Court Room Area	9		9	RCFL1X23	26	0.23	874.46	3737	9	LEDPLP1X12			12	0.11	403.60	3737	0.13	470.86
GOV		COURT RM #7	EMERGENCY LIGHTING	2		2	EDL EXIT	20	0.04	149.48	3737	9	NF LEDEDL			1	0.01	33.63	3737	0.03	115.85
GOV	3296	COURT ENTRY	Common Areas & Hallways	1		1	24ID2L T8	58	0.06	216.75	3737	1	4LED13W-2L			26	0.03	97.16	3737	0.03	119.58
GOV	3298	CONF RM	Conference & Meeting Rooms	2		2	24ID2L T8	58	0.12	216.75	1869	2	4LED15W-2L			31	0.06	115.85	1869	0.05	100.90
GOV	3299	CONF RM	Conference & Meeting Rooms	2		2	24ID2L T8	58	0.12	216.75	1869	2	4LED15W-2L			31	0.06	115.85	1869	0.05	100.90
GOV		COURT RM #6	Court Room Area	24		24	4ID2L T8	59	1.42	5291.59	3737	24	4LED18W-2L			37	0.89	3318.46	3737	0.53	1973.14
GOV		COURT RM #6	Court Room Area	10		10	14MW2L T8	58	0.58	2167.46	3737	10	4LED13W-2L			26	0.26	971.62	3737	0.32	1195.84
GOV		COURT RM #6	Court Room Area	9		9	RCFL1X23	26	0.23	874.46	3737	9	LEDPLP1X12			12	0.11	403.60	3737	0.13	470.86
GOV		COURT RM #6	EMERGENCY LIGHTING	2		2	EDL EXIT	20	0.04	149.48	3737	9	NF LEDEDL			1	0.01	33.63	3737	0.03	115.85
GOV	3302	INTERVIEW RM	Conference & Meeting Rooms	1		1	24ID2L T8	58	0.06	108.37	1869	1	4LED15W-2L			31	0.03	57.92	1869	0.03	50.45
GOV		COURT ENTRY	Common Areas & Hallways	1		1	24ID2L T8	58	0.06	216.75	3737	1	4LED13W-2L			26	0.03	97.16	3737	0.03	119.58
GOV	3318	CONF RM	Conference & Meeting Rooms	2		2	24ID2L T8	58	0.12	216.75	1869	2	4LED15W-2L			31	0.06	115.85	1869	0.05	100.90
GOV	3319	CONF RM	Conference & Meeting Rooms	2		2	24ID2L T8	58	0.12	216.75	1869	2	4LED15W-2L			31	0.06	115.85	1869	0.05	100.90
GOV		COURT ROOM	Court Room Area	30		30	4ID2L T8	59	1.77	6614.49	3737	30	4LED18W-2L			37	1.11	4148.07	3737	0.66	2466.42
GOV		COURT ROOM	Court Room Area	22		22	14TP2L T8	59	1.30	4850.63	3737	22	4LED13W-2L			26	0.57	2137.56	3737	0.73	2713.06
GOV		COURT ROOM	Court Room Area	9		9	RCFL1X23	26	0.23	874.46	3737	9	LEDPLP1X12			12	0.11	403.60	3737	0.13	470.86
GOV		COURT ROOM	EMERGENCY LIGHTING	2		2	EDL EXIT	20	0.04	149.48	3737	2	NF LEDEDL			1	0.00	7.47	3737	0.04	142.01
GOV		COMMON BY 351	Common Areas & Hallways	48		48	24ID2L T8	58	2.78	10403.81	3737	48	4LED13W-2L			26	1.25	4663.78	3737	1.54	5740.03
GOV		COMMON BY 351	EMERGENCY LIGHTING	10		10	EDL EXIT	20	0.20	747.40	3737	10	NF LEDEDL			1	0.01	37.37	3737	0.19	710.03
GOV		COMMON BY 351	EMERGENCY LIGHTING	4		4	RCFL1X32	32	0.13	478.34	3737	4	LEDPLP1X12			12	0.05	179.38	3737	0.08	298.96
GOV		ENTRY TO CHAMBERS 3312	General Work Area	1		1	24ID3L T8	88	0.09	328.86	3737	1	4LED15W-2L			31	0.03	115.85	3737	0.06	213.01
GOV	3312	JUDGES OFF	PRIVATE OFFICE	5		5	24ID3L T8	88	0.44	822.14	1869	5	4LED15W-2L			31	0.16	289.62	1869	0.29	532.52
GOV		JUDGES OFF RR	PRIVATE OFFICE	2		2	4ID1L T8	30	0.06	112.11	1869	2	4LED18W-1L			18	0.04	67.27	1869	0.02	44.84
GOV		JUDGES OFF RR	PRIVATE OFFICE	2		2	RCFL1X32	32	0.06	119.58	1869	2	LEDPLP1X12			12	0.02	44.84	1869	0.04	74.74
GOV	3311	PVT OFF	PRIVATE OFFICE	3		3	24ID3L T8	88	0.26	986.57	3737	3	4LED15W-2L			31	0.09	347.54	3737	0.17	639.03
GOV		ENTRY TO CHAMBERS 3308	General Work Area	1		1	24ID3L T8	88	0.09	328.86	3737	1	4LED15W-2L			31	0.03	115.85	3737	0.06	213.01
GOV	3308	PVT OFF	PRIVATE OFFICE	3		3	24ID3L T8	88	0.26	986.57	3737	3	4LED15W-2L			31	0.09	347.54	3737	0.17	639.03
GOV	3294	JUDGES OFF	PRIVATE OFFICE	5		5	24ID3L T8	88	0.44	822.14	1869	5	4LED15W-2L			31	0.16	289.62	1869	0.29	532.52
GOV		JUDGES OFF RR	PRIVATE OFFICE	2		2	4ID1L T8	30	0.06	112.11	1869	2	4LED18W-1L			18	0.04	67.27	1869	0.02	44.84
GOV		JUDGES OFF RR	PRIVATE OFFICE	2		2	RCFL1X32	32	0.06	119.58	1869	2	LEDPLP1X12			12	0.02	44.84	1869	0.04	74.74
GOV	351	DATA RM	Mechanical/Electrical Room	2		2	4S2L T8	59	0.12	440.97	3737	2	4LED13W-2L	1	SW-CTDN	26	0.05	136.03	2616	0.07	304.94
GOV	3292	CONF RM	Conference & Meeting Rooms	8		8	24ID3L T8	88	0.70	1315.42	1869	8	4LED15W-2L		Dim	31	0.25	324.37	1308	0.46	991.05
GOV	350	ELEC RM	Mechanical/Electrical Room	2		2	4S2L T8	59	0.12	440.97	3737	2	4LED13W-2L	1	SW-CTDN	26	0.05	136.03	2616	0.07	304.94
GOV		ENTRY TO CHAMBERS 3272	General Work Area	1		1	24ID3L T8	88	0.09	328.86	3737	1	4LED15W-2L			31	0.03	115.85	3737	0.06	213.01
GOV	3274	JUDGES OFF	PRIVATE OFFICE	5		5	24ID3L T8	88	0.44	822.14	1869	5	4LED15W-2L			31	0.16	289.62	1869	0.29	532.52
GOV		JUDGES OFF RR	PRIVATE OFFICE	2		2	4ID1L T8	30	0.06	112.11	1869	2	4LED18W-1L			18	0.04	67.27	1869	0.02	44.84
GOV		JUDGES OFF RR	PRIVATE OFFICE	2		2	RCFL1X32	32	0.06	119.58	1869	2	LEDPLP1X12			12	0.02	44.84	1869	0.04	74.74
GOV	3372	PVT OFF	PRIVATE OFFICE	3		3	24ID3L T8	88	0.26	986.57	3737	3	4LED15W-2L			31	0.09	347.54	3737	0.17	639.03
GOV		ENTRY TO CHAMBERS 3269	General Work Area	1		1	24ID3L T8	88	0.09	328.86	3737	1	4LED15W-2L			31	0.03	115.85	3737	0.06	213.01
GOV	3269	PVT OFF	PRIVATE OFFICE	3		3	24ID3L T8	88	0.26	986.57	3737	3	4LED15W-2L			31	0.09	347.54	3737	0.17	639.03
GOV	3253	JUDGES OFF	PRIVATE OFFICE	5		5	24ID3L T8	88	0.44	822.14	1869	5	4LED15W-2L			31	0.16	289.62	1869	0.29	532.52
GOV		JUDGES OFF RR	PRIVATE OFFICE	2		2	4ID1L T8	30	0.06	112.11	1869	2	4LED18W-1L			18	0.04	67.27	1869	0.02	44.84
GOV		JUDGES OFF RR	PRIVATE OFFICE	2		2	RCFL1X32	32	0.06	119.58	1869	2	LEDPLP1X12			12	0.02	44.84	1869	0.04	74.74
GOV		ELEC RM	Mechanical/Electrical Room	2		2	4S2L T8	59	0.12	440.97	3737	2	4LED13W-2L	1	SW-CTDN	26	0.05	136.03	2616	0.07	304.94
GOV	342	DATA RM	Mechanical/Electrical Room	2		2	4S2L T8	59	0.12	440.97	3737	2	4LED13W-2L	1	SW-CTDN	26	0.05	136.03	2616	0.07	304.94
GOV	3229	STORAGE RM	Storage Room	2		2	24ID2L T8	58	0.12	433.49	3737	2	4LED13W-2L			26	0.05	194.32	3737	0.06	239.17
GOV	341	ELEC RM	Mechanical/Electrical Room	2		2	4S2L T8	59	0.12	440.97	3737	2	4LED13W-2L	1	SW-CTDN	26	0.05	136.03	2616	0.07	304.94
GOV		ENTRY TO CHAMBERS 3226	General Work Area	1		1	24ID3L T8	88	0.09	328.86	3737	1	4LED15W-2L			31	0.03	115.85	3737	0.06	213.01
GOV	3227	JUDGES OFF	PRIVATE OFFICE	5		5	24ID3L T8	88	0.44	822.14	1869	5	4LED15W-2L			31	0.16	289.62	1869	0.29	532.52
GOV		JUDGES OFF RR	PRIVATE OFFICE	2		2	4ID1L T8	30	0.06	112.11	1869	2	4LED18W-1L			18	0.04	67.27	1869	0.02	44.84
GOV		JUDGES OFF RR	PRIVATE OFFICE	2		2	RCFL1X32	32	0.06	119.58	1869	2	LEDPLP1X12			12	0.02	44.84	1869	0.04	74.74
GOV	3226	PVT OFF	PRIVATE OFFICE	3		3	24ID3L T8	88	0.26	986.57	3737	3	4LED15W-2L			31	0.09	347.54	3737	0.17	639.03
GOV		ENTRY TO CHAMBERS 3211	General Work Area	1		1	24ID3L T8	88	0.09	328.86	3737	1	4LED15W-2L			31	0.03	115.85	3737	0.06	213.01
GOV	3211	PVT OFF	PRIVATE OFFICE	3		3	24ID3L T8	88	0.26	986.57	3737	3	4LED15W-2L			31	0.09	347.54	3737	0.17	639.03
GOV	3206	JUDGES OFF	PRIVATE OFFICE	5		5	24ID3L T8	88	0.44	822.14	1869	5	4LED15W-2L			31	0.16	289.62	1869	0.29	532.52
GOV		JUDGES OFF RR	PRIVATE OFFICE	2		2	4ID1L T8	30	0.06	112.11	1869	2	4LED18W-1L			18	0.04	67.27	1869	0.02	44.84
GOV		JUDGES OFF RR	PRIVATE OFFICE	2		2	RCFL1X32	32	0.06	119.58	1869	2	LEDPLP1X12			12	0.02	44.84	1869	0.04	74.74
GOV	3208	AV STOR	Storage Room	1		1	4S2L T8	59	0.06	220.48	3737	1	4LED13W-2L			26	0.03	97.16	3737	0.03	123.32
GOV	3223	AV STOR	Storage Room	1		1	4S2L T8	59	0.06	220.48	3737	1	4LED13W-2L			26	0.03	97.16	3737	0.03	123.32

GOV	3320	JC	Janitors Closet	1		1	4S2L T8	59	0.06	220.48	3737	1	4LED13W-2L			26	0.03	97.16	3737	0.03	123.32
GOV	3231	STORAGE	Storage Room	4		4	24ID3L T8	88	0.35	657.71	1869	4	4LED13W-2L			26	0.10	194.32	1869	0.25	463.39
GOV	3234	JURY ROOM	Conference & Meeting Rooms	5		5	24ID3L T8	88	0.44	822.14	1869	5	4LED15W-2L			31	0.16	289.62	1869	0.29	532.52
GOV		JURY ROOM MRR	PRIVATE RESTROOM	1		1	4ID1L T8	30	0.03	56.06	1869	1	4LED15W-1L			15	0.02	28.03	1869	0.02	28.03
GOV		JURY ROOM WRR	PRIVATE RESTROOM	1		1	RCFL1X32	32	0.03	59.79	1869	1	LEDPLP1X12			12	0.01	22.42	1869	0.02	37.37
GOV		JURY ROOM WRR	PRIVATE RESTROOM	1		1	4ID1L T8	30	0.03	56.06	1869	1	4LED15W-1L			15	0.02	28.03	1869	0.02	28.03
GOV		JURY ROOM MRR	PRIVATE RESTROOM	1		1	RCFL1X32	32	0.03	59.79	1869	1	LEDPLP1X12			12	0.01	22.42	1869	0.02	37.37
GOV	3238	JURY ROOM	Conference & Meeting Rooms	5		5	24ID3L T8	88	0.44	822.14	1869	5	4LED15W-2L			31	0.16	289.62	1869	0.29	532.52
GOV		JURY ROOM MRR	PRIVATE RESTROOM	1		1	4ID1L T8	30	0.03	56.06	1869	1	4LED15W-1L			15	0.02	28.03	1869	0.02	28.03
GOV		JURY ROOM MRR	PRIVATE RESTROOM	1		1	RCFL1X32	32	0.03	59.79	1869	1	LEDPLP1X12			12	0.01	22.42	1869	0.02	37.37
GOV		JURY ROOM WRR	PRIVATE RESTROOM	1		1	4ID1L T8	30	0.03	56.06	1869	1	4LED15W-1L			15	0.02	28.03	1869	0.02	28.03
GOV		JURY ROOM WRR	PRIVATE RESTROOM	1		1	RCFL1X32	32	0.03	59.79	1869	1	LEDPLP1X12			12	0.01	22.42	1869	0.02	37.37
GOV		OPEN OFFICE	General Work Area	7		7	24ID3L T8	88	0.62	2301.99	3737	7	4LED15W-2L			31	0.22	810.93	3737	0.40	1491.06
GOV		RECEPT AREA	General Work Area	3		3	24ID2L T8	58	0.17	650.24	3737	3	4LED15W-2L			31	0.09	347.54	3737	0.08	302.70
GOV		OPEN OFFICE	General Work Area	7		7	24ID3L T8	88	0.62	1151.00	1869	7	4LED15W-2L			31	0.22	405.46	1869	0.40	745.53
GOV	3241	PVT OFF	PRIVATE OFFICE	2		2	24ID3L T8	88	0.18	657.71	3737	2	4LED15W-2L			31	0.06	231.69	3737	0.11	426.02
GOV	3245	PVT OFF	PRIVATE OFFICE	2		2	24ID3L T8	88	0.18	657.71	3737	2	4LED15W-2L			31	0.06	231.69	3737	0.11	426.02
GOV	3247	PVT OFF	PRIVATE OFFICE	2		2	24ID3L T8	88	0.18	657.71	3737	2	4LED15W-2L			31	0.06	231.69	3737	0.11	426.02
GOV	3249	PVT OFF	PRIVATE OFFICE	2		2	24ID3L T8	88	0.18	657.71	3737	2	4LED15W-2L			31	0.06	231.69	3737	0.11	426.02
GOV	3250	PVT OFF	PRIVATE OFFICE	3		3	24ID3L T8	88	0.26	986.57	3737	3	4LED15W-2L			31	0.09	347.54	3737	0.17	639.03
GOV	3248	PVT OFF	PRIVATE OFFICE	2		2	24ID3L T8	88	0.18	657.71	3737	2	4LED15W-2L			31	0.06	231.69	3737	0.11	426.02
GOV	3244	PVT OFF	PRIVATE OFFICE	2		2	24ID3L T8	88	0.18	657.71	3737	2	4LED15W-2L			31	0.06	231.69	3737	0.11	426.02
GOV	3255	AV STOR	Storage Room	1		1	4S2L T8	59	0.06	220.48	3737	1	4LED13W-2L			26	0.03	97.16	3737	0.03	123.32
GOV	3273	AV STOR	Storage Room	1		1	4S2L T8	59	0.06	220.48	3737	1	4LED13W-2L			26	0.03	97.16	3737	0.03	123.32
GOV	3273	AV STOR	Storage Room	1		1	4S2L T8	59	0.06	220.48	3737	1	4LED13W-2L			26	0.03	97.16	3737	0.03	123.32
GOV	3290	BREAK RM	Break & Loung Areas	1		1	24ID2L T8	58	0.06	108.37	1869	1	4LED13W-2L			26	0.03	48.58	1869	0.03	59.79
GOV		UNI RR	Common Restroom	1		1	4ID1L T8	30	0.03	112.11	3737	1	4LED15W-1L			15	0.02	56.06	3737	0.02	56.06
GOV		UNI RR	Common Restroom	1		1	RCFL1X32	32	0.03	119.58	3737	1	LEDPLP1X12			12	0.01	44.84	3737	0.02	74.74
GOV		UNI RR	Common Restroom	1		1	4ID1L T8	30	0.03	112.11	3737	1	4LED15W-1L			15	0.02	56.06	3737	0.02	56.06
GOV		UNI RR	Common Restroom	1		1	RCFL1X32	32	0.03	119.58	3737	1	LEDPLP1X12			12	0.01	44.84	3737	0.02	74.74
GOV	3238	JURY ROOM	Conference & Meeting Rooms	5		5	24ID3L T8	88	0.44	822.14	1869	5	4LED15W-2L			31	0.16	289.62	1869	0.29	532.52
GOV	3287	JURY ROOM	Conference & Meeting Rooms	5		5	24ID3L T8	88	0.44	822.14	1869	5	4LED15W-2L			31	0.16	289.62	1869	0.29	532.52
GOV		JURY ROOM WRR	PRIVATE RESTROOM	1		1	4ID1L T8	30	0.03	56.06	1869	1	4LED15W-1L			15	0.02	28.03	1869	0.02	28.03
GOV		JURY ROOM WRR	PRIVATE RESTROOM	1		1	RCFL1X32	32	0.03	59.79	1869	1	LEDPLP1X12			12	0.01	22.42	1869	0.02	37.37
GOV		JURY ROOM MRR	PRIVATE RESTROOM	1		1	4ID1L T8	30	0.03	56.06	1869	1	4LED15W-1L			15	0.02	28.03	1869	0.02	28.03
GOV		JURY ROOM MRR	PRIVATE RESTROOM	1		1	RCFL1X32	32	0.03	59.79	1869	1	LEDPLP1X12			12	0.01	22.42	1869	0.02	37.37
GOV	3282	JURY ROOM	Conference & Meeting Rooms	5		5	24ID3L T8	88	0.44	822.14	1869	5	4LED15W-2L			31	0.16	289.62	1869	0.29	532.52
GOV		JURY ROOM WRR	PRIVATE RESTROOM	1		1	4ID1L T8	30	0.03	56.06	1869	1	4LED15W-1L			15	0.02	28.03	1869	0.02	28.03
GOV		JURY ROOM WRR	PRIVATE RESTROOM	1		1	RCFL1X32	32	0.03	59.79	1869	1	LEDPLP1X12			12	0.01	22.42	1869	0.02	37.37
GOV		JURY ROOM MRR	PRIVATE RESTROOM	1		1	4ID1L T8	30	0.03	56.06	1869	1	4LED15W-1L			15	0.02	28.03	1869	0.02	28.03
GOV		JURY ROOM MRR	PRIVATE RESTROOM	1		1	RCFL1X32	32	0.03	59.79	1869	1	LEDPLP1X12			12	0.01	22.42	1869	0.02	37.37
GOV	3231	STORAGE	Storage Room	4		4	24ID3L T8	88	0.35	657.71	1869	4	4LED13W-2L			26	0.10	194.32	1869	0.25	463.39
GOV	3295	AV STOR	Storage Room	1		1	4S2L T8	59	0.06	220.48	3737	1	4LED13W-2L			26	0.03	97.16	3737	0.03	123.32
GOV	3315	AV STOR	Storage Room	1		1	4S2L T8	59	0.06	220.48	3737	1	4LED13W-2L			26	0.03	97.16	3737	0.03	123.32
GOV		COMMON 2ND BY CR	Common Areas & Hallways	75		75	24ID2L T8	58	4.35	16255.95	3737	75	4LED13W-2L			26	1.95	7287.15	3737	2.40	8968.80
GOV		COMMON 2ND BY CR	EMERGENCY LIGHTING	3		3	RLED	3	0.01	33.63	3737	0	DNR			0	0.01	33.63	3737	0.00	0.00
GOV		COMMON 2ND ENDS	Common Areas & Hallways	2		2	RCFL1X32	32	0.06	239.17	3737	2	LEDPLP1X12			12	0.02	89.69	3737	0.04	149.48
GOV		COURT CANOPY X4	Common Areas & Hallways	16		16	SQ RCFL1X32	32	0.51	1913.34	3737	16	LEDPL1X12			12	0.19	717.50	3737	0.32	1195.84
GOV		CENTER ATRIUM	Common Areas & Hallways	52		52	4ID2L T8	59	3.07	11465.12	3737	52	4LED15W-2L			31	1.61	6024.04	3737	1.46	5441.07
GOV		OVER ELEV	Common Areas & Hallways	5		5	4ID1L T8	30	0.15	560.55	3737	5	4LED15W-1L			15	0.08	280.28	3737	0.08	280.28
GOV		ELEV LOBBY	Common Areas & Hallways	17		17	24ID2L T8	58	0.99	3684.68	3737	5	4LED13W-2L			26	0.13	485.81	3737	0.86	3198.87
GOV		RR LOBBY	Common Areas & Hallways	6		6	24ID2L T8	58	0.35	1300.48	3737	6	4LED13W-2L			26	0.16	582.97	3737	0.19	717.50
GOV		RR LOBBY	Common Areas & Hallways	2		2	RCFL1X32	32	0.06	239.17	3737	2	LEDPLP1X12			12	0.02	89.69	3737	0.04	149.48
GOV	2057	DA ENTRY	General Work Area	10		10	24ID3L T8	88	0.88	3288.56	3737	10	4LED15W-2L			31	0.31	1158.47	3737	0.57	2130.09
GOV	2057	DA ENTRY	EMERGENCY LIGHTING	2		2	EDL EXIT	20	0.04	149.48	3737	2	NF LEDEDL			1	0.00	7.47	3737	0.04	142.01
GOV		DA ENTRY WRR	Common Restroom	2		2	4ID1L T8	30	0.06	224.22	3737	2	4LED15W-1L			15	0.03	112.11	3737	0.03	112.11
GOV		DA ENTRY WRR	Common Restroom	1		1	RCFL1X32	32	0.03	119.58	3737	1	LEDPLP1X12			12	0.01	44.84	3737	0.02	74.74
GOV		DA ENTRY MRR	Common Restroom	2		2	4ID1L T8	30	0.06	224.22	3737	2	4LED15W-1L			15	0.03	112.11	3737	0.03	112.11
GOV		DA ENTRY MRR	Common Restroom	1		1	RCFL1X32	32	0.03	119.58	3737	1	LEDPLP1X12			12	0.01	44.84	3737	0.02	74.74
GOV		GENERAL WK AREA ENTRY	General Work Area	4		4	24ID3L T8	88	0.35	1315.42	3737	4	4LED15W-2L			31	0.12	463.39	3737	0.23	852.04
GOV		GENERAL WK AREA OPEN OFF	General Work Area	42		42	24ID3L T8	88	3.70	13811.95	3737	42	4LED15W-2L			31	1.30	4865.57	3737	2.39	8946.38
GOV		GENERAL WK AREA OPEN OFF	EMERGENCY LIGHTING	12		12	EDL EXIT	20	0.24	896.88	3737	12	NF LEDEDL			1	0.01	44.84	3737	0.23	852.04
GOV		HALL BY 2078	General Work Area	17		17	24ID3L T8	88	1.50	5590.55	3737	17	4LED15W-2L			31	0.53	1969.40	3737	0.97	3621.15
GOV		HALL BY 2072	General Work Area	2		2	24ID3L T8	88	0.18	657.71	3737	2	4LED15W-2L			31	0.06	231.69	3737	0.11	426.02
GOV		HALL BY 2046	General Work Area	5		5	24ID3L T8	88	0.44	1644.28	3737	5	4LED15W-2L			31	0.16	579.24	3737	0.29	1065.05
GOV	2064	WK RM	General Work Area	4		4	24ID3L T8	88	0.35	657.71	1869	4	4LED15W-2L			31	0.12	231.69	1869	0.23	426.02
GOV	2065	PRV OFF	PRIVATE OFFICE	2		2	24ID3L T8	88	0.18	328.86	1869	2	4LED15W-2L			31	0.06	115.85	1869	0.11	213.01
GOV	2066	PRV OFF	PRIVATE OFFICE	2		2	24ID3L T8	88	0.18	328.86	1869	2	4LED15W-2L			31	0.06	115.85	1869	0.11	213.01
GOV	2067	PRV OFF	PRIVATE OFFICE	2		2	24ID3L T8	88	0.18	328.86	1869	2	4LED15W-2L			31	0.06	115.85	1869	0.11	213.01
GOV	2068	PRV OFF	PRIVATE OFFICE	2		2	24ID3L T8	88	0.18	328.86	1869	2	4LED15W-2L			31	0.06	115.85	1869	0.11	213.01
GOV	2069	PRV OFF	PRIVATE OFFICE	2		2	24ID3L T8	88	0.18	328.86	1869	2	4LED15W-2L			31	0.06	115.85	1869	0.11	213.01
GOV	2070	PRV OFF	PRIVATE OFFICE	2		2	24ID3L T8	88	0.18	328.86	1869	2	4LED15W-2L			31	0.06	115.85	1869	0.11	213.01
GOV	2071	PRV OFF	PRIVATE OFFICE	2		2	24ID3L T8	88	0.18	328.86	1869	2	4LED15W-2L			31	0.06	115.85	1869	0.11	213.01
GOV	2072	PRV OFF	PRIVATE OFFICE	2		2	24ID3L T8	88	0.18	328.86	1869	2	4LED15W-2L			31	0.06	115.85	1869	0.11	213.01

GOV	2073	PRV OFF	PRIVATE OFFICE	2		2	24ID3L T8	88	0.18	328.86	1869	2	4LED15W-2L			31	0.06	115.85	1869	0.11	213.01
GOV	2074	PRV OFF	PRIVATE OFFICE	2		2	24ID3L T8	88	0.18	328.86	1869	2	4LED15W-2L			31	0.06	115.85	1869	0.11	213.01
GOV	2075	PRV OFF	PRIVATE OFFICE	2		2	24ID3L T8	88	0.18	328.86	1869	2	4LED15W-2L			31	0.06	115.85	1869	0.11	213.01
GOV	2076	PRV OFF	PRIVATE OFFICE	2		2	24ID3L T8	88	0.18	328.86	1869	2	4LED15W-2L			31	0.06	115.85	1869	0.11	213.01
GOV	2077	PRV OFF	PRIVATE OFFICE	2		2	24ID3L T8	88	0.18	328.86	1869	2	4LED15W-2L			31	0.06	115.85	1869	0.11	213.01
GOV	2078	PRV OFF	PRIVATE OFFICE	2		2	24ID3L T8	88	0.18	328.86	1869	2	4LED15W-2L			31	0.06	115.85	1869	0.11	213.01
GOV	2079	PRV OFF	PRIVATE OFFICE	2		2	24ID3L T8	88	0.18	328.86	1869	2	4LED15W-2L			31	0.06	115.85	1869	0.11	213.01
GOV	2080	PRV OFF	PRIVATE OFFICE	2		2	24ID3L T8	88	0.18	328.86	1869	2	4LED15W-2L			31	0.06	115.85	1869	0.11	213.01
GOV	2081	PRV OFF	PRIVATE OFFICE	2		2	24ID3L T8	88	0.18	328.86	1869	2	4LED15W-2L			31	0.06	115.85	1869	0.11	213.01
GOV	2082	PRV OFF CORNER	PRIVATE OFFICE	3		3	24ID3L T8	88	0.26	493.28	1869	3	4LED15W-2L			31	0.09	173.77	1869	0.17	319.51
GOV	2083	PRV OFF	PRIVATE OFFICE	2		2	24ID3L T8	88	0.18	328.86	1869	2	4LED15W-2L			31	0.06	115.85	1869	0.11	213.01
GOV	2084	PRV OFF	PRIVATE OFFICE	2		2	24ID3L T8	88	0.18	328.86	1869	2	4LED15W-2L			31	0.06	115.85	1869	0.11	213.01
GOV	2085	PRV OFF	PRIVATE OFFICE	2		2	24ID3L T8	88	0.18	328.86	1869	2	4LED15W-2L			31	0.06	115.85	1869	0.11	213.01
GOV	2086	CONF RM	PRIVATE OFFICE	4		4	24ID3L T8	88	0.35	657.71	1869	4	4LED15W-2L			31	0.12	231.69	1869	0.23	426.02
GOV	2087	PRV OFF	PRIVATE OFFICE	2		2	24ID3L T8	88	0.18	328.86	1869	2	4LED15W-2L			31	0.06	115.85	1869	0.11	213.01
GOV	2088	PRV OFF	PRIVATE OFFICE	2		2	24ID3L T8	88	0.18	328.86	1869	2	4LED15W-2L			31	0.06	115.85	1869	0.11	213.01
GOV	2089	PRV OFF	PRIVATE OFFICE	2		2	24ID3L T8	88	0.18	328.86	1869	2	4LED15W-2L			31	0.06	115.85	1869	0.11	213.01
GOV	2090	STORAGE	Storage Room	2		2	24ID3L T8	88	0.18	328.86	1869	2	4LED13W-2L			26	0.05	97.16	1869	0.12	231.69
GOV	2100	FILE RM	General Work Area	2		2	24TP3L T8	88	0.18	328.86	1869	2	4LED18W-2L 24W			37	0.07	138.27	1869	0.10	190.59
GOV	2102	FILE RM	General Work Area	2		2	24TP3L T8	88	0.18	328.86	1869	2	4LED18W-2L 24W			37	0.07	138.27	1869	0.10	190.59
GOV	2103	FILE RM	General Work Area	4		4	24TP3L T8	88	0.35	657.71	1869	4	4LED18W-2L 24W			37	0.15	276.54	1869	0.20	381.17
GOV	272	MECH RM	Mechanical/Electrical Room	2		2	4S2L T8	59	0.12	440.97	3737	2	4LED13W-2L	1	SW-CTDN	26	0.05	136.03	2616	0.07	304.94
GOV	273	DATA RM	Mechanical/Electrical Room	2		2	4S2L T8	59	0.12	440.97	3737	2	4LED13W-2L	1	SW-CTDN	26	0.05	136.03	2616	0.07	304.94
GOV	2091	CONF RM	PRIVATE OFFICE	4		4	24ID3L T8	88	0.35	657.71	1869	4	4LED15W-2L			31	0.12	231.69	1869	0.23	426.02
GOV	2092	BREAK RM	Break & Loung Areas	6		6	24ID3L T8	88	0.53	986.57	1869	6	4LED13W-2L			26	0.16	291.49	1869	0.37	695.08
GOV		MRR	Common Restroom	6		6	4ID1L T8	30	0.18	672.66	3737	6	4LED15W-1L			15	0.09	336.33	3737	0.09	336.33
GOV		MRR	Common Restroom	3		3	RCFL1X32	32	0.10	358.75	3737	3	LEDPLP1X12			12	0.04	134.53	3737	0.06	224.22
GOV		MRR	Common Restroom	3		3	WM CFL2X9	23	0.07	257.85	3737	3	LEDPL2X9			18	0.05	201.80	3737	0.02	56.06
GOV		WRR	Common Restroom	6		6	4ID1L T8	30	0.18	672.66	3737	6	4LED15W-1L			15	0.09	336.33	3737	0.09	336.33
GOV		WRR	Common Restroom	3		3	RCFL1X32	32	0.10	358.75	3737	3	LEDPLP1X12			12	0.04	134.53	3737	0.06	224.22
GOV		WRR	Common Restroom	3		3	WM CFL2X9	23	0.07	257.85	3737	3	LEDPL2X9			18	0.05	201.80	3737	0.02	56.06
GOV	2029	CONF RM	Conference & Meeting Rooms	6		6	24ID3L T8	88	0.53	986.57	1869	6	4LED15W-2L			31	0.19	347.54	1869	0.34	639.03
GOV	2029	CONF RM	Conference & Meeting Rooms	2		2	24ID3L T8	88	0.18	328.86	1869	2	4LED15W-2L			31	0.06	115.85	1869	0.11	213.01
GOV	2031	CONF RM	Conference & Meeting Rooms	2		2	24ID3L T8	88	0.18	328.86	1869	2	4LED15W-2L			31	0.06	115.85	1869	0.11	213.01
GOV	2032	CONF RM	Conference & Meeting Rooms	2		2	24ID3L T8	88	0.18	328.86	1869	2	4LED15W-2L			31	0.06	115.85	1869	0.11	213.01
GOV	2026	LAW LIBRARY	General Work Area	13		13	24ID3L T8	88	1.14	2137.56	1869	13	4LED15W-2L			31	0.40	753.01	1869	0.74	1384.56
GOV	2025	LAW LIBRARY OFF	General Work Area	3		3	24ID3L T8	88	0.26	493.28	1869	3	4LED15W-2L			31	0.09	173.77	1869	0.17	319.51
GOV		CONF RM BY COPY	Conference & Meeting Rooms	2		2	24ID3L T8	88	0.18	328.86	1869	2	4LED15W-2L			31	0.06	115.85	1869	0.11	213.01
GOV		MIDDLE LOBBY	Common Areas & Hallways	36		36	RCFL1X32	32	1.15	4305.02	3737	36	LEDPLP1X12			12	0.43	1614.38	3737	0.72	2690.64
GOV		MRR	Common Restroom	6		6	4ID1L T8	30	0.18	672.66	3737	6	4LED15W-1L			15	0.09	336.33	3737	0.09	336.33
GOV		MRR	Common Restroom	4		4	RCFL1X324	32	0.13	478.34	3737	4	LEDPLP1X12			12	0.05	179.38	3737	0.08	298.96
GOV		MRR	Common Restroom	6		6	WM CFL2X9	23	0.14	515.71	3737	6	LEDPL2X9			18	0.11	403.60	3737	0.03	112.11
GOV		WRR	Common Restroom	6		6	4ID1L T8	30	0.18	672.66	3737	6	4LED15W-1L			15	0.09	336.33	3737	0.09	336.33
GOV		WRR	Common Restroom	4		4	RCFL1X324	32	0.13	478.34	3737	4	LEDPLP1X12			12	0.05	179.38	3737	0.08	298.96
GOV		WRR	Common Restroom	6		6	WM CFL2X9	23	0.14	515.71	3737	6	LEDPL2X9			18	0.11	403.60	3737	0.03	112.11
GOV	2008	COUNTY CLERK RECEPT	General Work Area	14		14	24ID3L T8	88	1.23	4603.98	3737	14	4LED15W-2L			31	0.43	1621.86	3737	0.80	2982.13
GOV	2008	COUNTY CLERK DESK	General Work Area	9		9	RCFL1X32	32	0.29	1076.26	3737	9	LEDPLP1X12			12	0.11	403.60	3737	0.18	672.66
GOV	2005	COUNTY CLERK WK AREA	General Work Area	56		56	24ID3L T8	88	4.93	9207.97	1869	56	4LED15W-2L			31	1.74	3243.72	1869	3.19	5964.25
GOV	2005	COUNTY CLERK WK AREA	EMERGENCY LIGHTING	8		8	RLED	3	0.02	44.84	1869	0	DNR			0	0.02	44.84	1869	0.00	0.00
GOV	2005	COUNTY CLERK RESEARCH RM	General Work Area	3		3	24ID3L T8	88	0.26	493.28	1869	3	4LED15W-2L			31	0.09	173.77	1869	0.17	319.51
GOV	2019	SECURE STORAGE	General Work Area	8		8	24ID3L T8	88	0.70	2630.85	3737	8	4LED15W-2L			31	0.25	926.78	3737	0.46	1704.07
GOV	2014	SECURE STORAGE	General Work Area	1		1	24TP3L T8	88	0.09	328.86	3737	1	4LED18W-2L 24W			37	0.04	138.27	3737	0.05	190.59
GOV	2014	CONF RM	General Work Area	4		4	24ID3L T8	88	0.35	1315.42	3737	4	4LED15W-2L			31	0.12	463.39	3737	0.23	852.04
GOV		CORNER RR	Common Restroom	2		2	4ID1L T8	30	0.06	112.11	1869	2	4LED15W-1L			15	0.03	56.06	1869	0.03	56.06
GOV		CORNER RR	Common Restroom	1		1	RCFL1X32	32	0.03	59.79	1869	1	LEDPLP1X12			12	0.01	22.42	1869	0.02	37.37
GOV	223	DATA ROOM	Mechanical/Electrical Room	2		2	4S2L T8	59	0.12	440.97	3737	2	4LED13W-2L	1	SW-CTDN	26	0.05	136.03	2616	0.07	304.94
GOV	222	MECH ROOM	Mechanical/Electrical Room	2		2	4S2L T8	59	0.12	440.97	3737	2	4LED13W-2L	1	SW-CTDN	26	0.05	136.03	2616	0.07	304.94
GOV	2002	PRIVATE OFF	PRIVATE OFFICE	2		2	24ID3L T8	88	0.18	657.71	3737	2	4LED15W-2L			31	0.06	231.69	3737	0.11	426.02
GOV	2003	PRIVATE OFF	PRIVATE OFFICE	4		4	24ID3L T8	88	0.35	1315.42	3737	4	4LED15W-2L			31	0.12	463.39	3737	0.23	852.04
GOV	2004	PRIVATE OFF	PRIVATE OFFICE	4		4	24ID3L T8	88	0.35	1315.42	3737	4	4LED15W-2L			31	0.12	463.39	3737	0.23	852.04
GOV	2006	PRIVATE OFF	PRIVATE OFFICE	2		2	24ID3L T8	88	0.18	657.71	3737	2	4LED15W-2L			31	0.06	231.69	3737	0.11	426.02
GOV	207	CONF RM	Conference & Meeting Rooms	2		2	24ID3L T8	88	0.18	657.71	3737	2	4LED15W-2L			31	0.06	231.69	3737	0.11	426.02
GOV	2210	CONSTIBULE ENTRY	General Work Area	2		2	24ID2L T8	58	0.12	216.75	1869	2	4LED15W-2L			31	0.06	115.85	1869	0.05	100.90
GOV	2210	CONSTIBULE ENTRY	EMERGENCY LIGHTING	1		1	RLED	3	0.00	11.21	3737	0	DNR			0	0.00	11.21	3737	0.00	0.00
GOV	2210	CONSTIBULE OPEN OFF	General Work Area	14		14	24ID2L T8	58	0.81	1517.22	1869	14	4LED15W-2L			31	0.43	810.93	1869	0.38	706.29
GOV	2210	CONSTIBULE OPEN OFF	General Work Area	2		2	RCFL1X32	32	0.06	239.17	3737	2	LEDPLP1X12			12	0.02	89.69	3737	0.04	149.48
GOV	2207	CONSTIBULE CONF RM	Conference & Meeting Rooms	4		4	24ID2L T8	58	0.23	433.49	1869	4	4LED15W-2L			31	0.12	231.69	1869	0.11	201.80
GOV	2201	CONSTIBULE PVT OFF	PRIVATE OFFICE	2		2	24ID2L T8	58	0.12	216.75	1869	2	4LED15W-2L			31	0.06	115.85	1869	0.05	100.90
GOV	2203	CONSTIBULE PVT OFF	PRIVATE OFFICE	2		2	24ID2L T8	58	0.12	216.75	1869	2	4LED15W-2L			31	0.06	115.85	1869	0.05	100.90
GOV	2204	CONSTIBULE PVT OFF	PRIVATE OFFICE	4		4	24ID2L T8	58	0.23	433.49	1869	4	4LED15W-2L			31	0.12	231.69	1869	0.11	201.80
GOV		MRR	Common Restroom	2		2	4ID1L T8	30	0.06	112.11	1869	2	4LED15W-1L			15	0.03	56.06	1869	0.03	56.06
GOV		MRR	Common Restroom	1		1	RCFL1X32	32	0.03	59.79	1869	1	LEDPLP1X12			12	0.01	22.42	1869	0.02	37.37
GOV		WRR	Common Restroom	2		2	4ID1L T8	30	0.06	112.11	1869	2	4LED15W-1L			15	0.03	56.06	1869	0.03	56.06
GOV		WRR	Common Restroom	1		1	RCFL1X32	32	0.03	59.79	1869	1	LEDPLP1X12			12	0.01	22.42	1869	0.02	37.37

GOV	2209	CONSTIBULE COPY RM	General Work Area	2		2	24ID2L T8	58	0.12	216.75	1869	2	4LED15W-2L			31	0.06	115.85	1869	0.05	100.90
GOV	2211	ENTRY AREA	General Work Area	7		7	24ID3L T8	88	0.62	2301.99	3737	7	4LED15W-2L			31	0.22	810.93	3737	0.40	1491.06
GOV	2211	ENTRY AREA	EMERGENCY LIGHTING	2		2	RLED	3	0.01	22.42	3737	0	DNR			0	0.01	22.42	3737	0.00	0.00
GOV	2214	GEN WK AREA	General Work Area	41		41	24ID3L T8	88	3.61	13483.10	3737	41	4LED15W-2L			31	1.27	4749.73	3737	2.34	8733.37
GOV		GEN WK AREA	EMERGENCY LIGHTING	3		3	EDL EXIT	20	0.06	224.22	3737	3	NF LEDEDL			1	0.00	11.21	3737	0.06	213.01
GOV	2215	PVT OFF	PRIVATE OFFICE	2		2	24ID3L T8	88	0.18	657.71	3737	2	4LED15W-2L			31	0.06	231.69	3737	0.11	426.02
GOV	2216	PVT OFF	PRIVATE OFFICE	2		2	24ID3L T8	88	0.18	657.71	3737	2	4LED15W-2L			31	0.06	231.69	3737	0.11	426.02
GOV	2217	PVT OFF	PRIVATE OFFICE	2		2	24ID3L T8	88	0.18	657.71	3737	2	4LED15W-2L			31	0.06	231.69	3737	0.11	426.02
GOV	2218	PVT OFF	PRIVATE OFFICE	2		2	24ID3L T8	88	0.18	657.71	3737	2	4LED15W-2L			31	0.06	231.69	3737	0.11	426.02
GOV	2219	PVT OFF	PRIVATE OFFICE	2		2	24ID3L T8	88	0.18	657.71	3737	2	4LED15W-2L			31	0.06	231.69	3737	0.11	426.02
GOV		BY STAIRS	Common Areas & Hallways	2		2	RCFL1X32	32	0.06	239.17	3737	2	LEDPLP1X12			12	0.02	89.69	3737	0.04	149.48
GOV	2220	STORAGE RM	Storage Room	4		4	24TP3L T8	88	0.35	1315.42	3737	4	4LED15W-2L 24W			31	0.12	463.39	3737	0.23	852.04
GOV	2221	FILE RM	General Work Area	16		16	24TP3L T8	88	1.41	2630.85	1869	16	4LED18W-2L 24W			37	0.59	1106.15	1869	0.82	1524.70
GOV	2222	FILE RM	Storage Room	4		4	24TP3L T8	88	0.35	657.71	1869	4	4LED15W-2L 24W			31	0.12	231.69	1869	0.23	426.02
GOV	2223	FILE RM	Storage Room	4		4	24TP3L T8	88	0.35	657.71	1869	4	4LED15W-2L 24W			31	0.12	231.69	1869	0.23	426.02
GOV	2225	CONF RM	Storage Room	3		3	24ID3L T8	88	0.26	493.28	1869	3	4LED13W-2L			26	0.08	145.74	1869	0.19	347.54
GOV	2224	STORAGE	Storage Room	1		1	24TP2L T8	59	0.06	220.48	3737	1	4LED15W-2L			31	0.03	115.85	3737	0.03	104.64
GOV	3233	COURT ENTRY	Common Areas & Hallways	2		2	24ID2L T8	58	0.12	216.75	1869	2	4LED13W-2L			26	0.05	97.16	1869	0.06	119.58
GOV	3233	COURT ENTRY	EMERGENCY LIGHTING	1		1	EDL EXIT	20	0.02	74.74	3737	1	NF LEDEDL			1	0.00	3.74	3737	0.02	71.00
GOV	3233	COURT GEN WK	General Work Area	7		7	24ID3L T8	88	0.62	1151.00	1869	7	4LED15W-2L			31	0.22	405.46	1869	0.40	745.53
GOV	3233	COURT GEN WK	General Work Area	3		3	RCFL1X32	32	0.10	179.38	1869	3	LEDPLP1X12			12	0.04	67.27	1869	0.06	112.11
GOV	3233	COURT GEN WK	EMERGENCY LIGHTING	2		2	EDL EXIT	20	0.04	149.48	3737	2	NF LEDEDL			1	0.00	7.47	3737	0.04	142.01
GOV	2232	CONF RM	Conference & Meeting Rooms	3		3	24ID3L T8	88	0.26	493.28	1869	3	4LED15W-2L			31	0.09	173.77	1869	0.17	319.51
GOV	2231	PVT OFF	PRIVATE OFFICE	2		2	24ID3L T8	88	0.18	328.86	1869	2	4LED15W-2L			31	0.06	115.85	1869	0.11	213.01
GOV		FILE RM BACK	General Work Area	3		3	24ID2L T8	58	0.17	325.12	1869	3	4LED15W-2L			31	0.09	173.77	1869	0.08	151.35
GOV	2235	JOP ENTRY	General Work Area	2		2	24ID2L T8	58	0.12	216.75	1869	2	4LED15W-2L			31	0.06	115.85	1869	0.05	100.90
GOV	2237	JOP GEN WK	General Work Area	8		8	24ID3L T8	88	0.70	1315.42	1869	8	4LED15W-2L			31	0.25	463.39	1869	0.46	852.04
GOV	2236	JOP RECEPT	General Work Area	2		2	24ID3L T8	88	0.18	328.86	1869	2	4LED15W-2L			31	0.06	115.85	1869	0.11	213.01
GOV		JOP HALL BY 2240	General Work Area	3		3	24ID3L T8	88	0.26	493.28	1869	3	4LED15W-2L			31	0.09	173.77	1869	0.17	319.51
GOV	2238	JOP WK RM	General Work Area	2		2	24ID3L T8	88	0.18	328.86	1869	2	4LED15W-2L			31	0.06	115.85	1869	0.11	213.01
GOV	2238	JOP BREAK RM	Break & Loung Areas	2		2	24TP2L T8	59	0.12	220.48	1869	2	4LED15W-2L			31	0.06	115.85	1869	0.06	104.64
GOV	2238	JOP FILE RM	General Work Area	6		6	24TP3L T8	88	0.53	986.57	1869	6	4LED18W-2L 24W			37	0.22	414.81	1869	0.31	571.76
GOV		CT 4 ENTRY	General Work Area	1		1	24ID2L T8	58	0.06	216.75	3737	1	4LED15W-2L			31	0.03	115.85	3737	0.03	100.90
GOV	2258	MEETING ROOM	Conference & Meeting Rooms	2		2	24ID3L T8	88	0.18	328.86	1869	2	4LED15W-2L			31	0.06	115.85	1869	0.11	213.01
GOV	2259	MEETING ROOM	Conference & Meeting Rooms	2		2	24ID3L T8	88	0.18	328.86	1869	2	4LED15W-2L			31	0.06	115.85	1869	0.11	213.01
GOV		CT ROOM #4	Court Room Area	24		24	4ID2L T8	59	1.42	5291.59	3737	24	4LED18W-2L			37	0.89	3318.46	3737	0.53	1973.14
GOV		CT ROOM #4	Court Room Area	10		10	14MW2L T8	58	0.58	2167.46	3737	10	4LED13W-2L			26	0.26	971.62	3737	0.32	1195.84
GOV		CT ROOM #4	Court Room Area	10		10	RCFL1X32	32	0.32	1195.84	3737	10	LEDPLP1X12			12	0.12	448.44	3737	0.20	747.40
GOV	2260	INTERVIEW RM	Conference & Meeting Rooms	1		1	24ID3L T8	88	0.09	328.86	3737	1	4LED15W-2L			31	0.03	115.85	3737	0.06	213.01
GOV	2258	CT 3 ENTRY	General Work Area	1		1	24ID2L T8	58	0.06	216.75	3737	1	4LED15W-2L			31	0.03	115.85	3737	0.03	100.90
GOV	2265	MEETING ROOM	Conference & Meeting Rooms	2		2	24ID3L T8	88	0.18	328.86	1869	2	4LED15W-2L			31	0.06	115.85	1869	0.11	213.01
GOV	2267	MEETING ROOM	Conference & Meeting Rooms	2		2	24ID3L T8	88	0.18	328.86	1869	2	4LED15W-2L			31	0.06	115.85	1869	0.11	213.01
GOV		CT ROOM #3	Court Room Area	24		24	4ID2L T8	59	1.42	5291.59	3737	24	4LED18W-2L			37	0.89	3318.46	3737	0.53	1973.14
GOV		CT ROOM #3	Court Room Area	10		10	14MW2L T8	58	0.58	2167.46	3737	10	4LED13W-2L			26	0.26	971.62	3737	0.32	1195.84
GOV		CT ROOM #3	Court Room Area	10		10	RCFL1X32	32	0.32	1195.84	3737	10	LEDPLP1X12			12	0.12	448.44	3737	0.20	747.40
GOV		CT 3/4	EMERGENCY LIGHTING	4		4	EDL EXIT	20	0.08	298.96	3737	4	NF LEDEDL			1	0.00	14.95	3737	0.08	284.01
GOV	2292	CC ENTRY	General Work Area	2		2	24ID2L T8	58	0.12	216.75	1869	2	4LED15W-2L			31	0.06	115.85	1869	0.05	100.90
GOV	2290	CC GEN WK	General Work Area	14		14	24ID2L T8	58	0.81	1517.22	1869	14	4LED15W-2L			31	0.43	810.93	1869	0.38	706.29
GOV		CC FILE RM	General Work Area	1		1	24TP3L T8	88	0.09	164.43	1869	1	4LED18W-2L 24W			37	0.04	69.13	1869	0.05	95.29
GOV		CC PVT OFF	PRIVATE OFFICE	2		2	24TP3L T8	88	0.18	328.86	1869	2	4LED18W-2L 24W			37	0.07	138.27	1869	0.10	190.59
GOV	2298	CT 2 ENTRY	General Work Area	1		1	24ID2L T8	58	0.06	216.75	3737	1	4LED15W-2L			31	0.03	115.85	3737	0.03	100.90
GOV	2296	MEETING ROOM	Conference & Meeting Rooms	2		2	24ID3L T8	88	0.18	328.86	1869	2	4LED15W-2L			31	0.06	115.85	1869	0.11	213.01
GOV	2297	MEETING ROOM	Conference & Meeting Rooms	2		2	24ID3L T8	88	0.18	328.86	1869	2	4LED15W-2L			31	0.06	115.85	1869	0.11	213.01
GOV		CT ROOM #2	Court Room Area	24		24	4ID2L T8	59	1.42	5291.59	3737	24	4LED18W-2L			37	0.89	3318.46	3737	0.53	1973.14
GOV		CT ROOM #2	Court Room Area	10		10	14MW2L T8	58	0.58	2167.46	3737	10	4LED13W-2L			26	0.26	971.62	3737	0.32	1195.84
GOV		CT ROOM #2	Court Room Area	10		10	RCFL1X32	32	0.32	1195.84	3737	10	LEDPLP1X12			12	0.12	448.44	3737	0.20	747.40
GOV		CT #2	EMERGENCY LIGHTING	2		2	EDL EXIT	20	0.04	149.48	3737	2	NF LEDEDL			1	0.00	7.47	3737	0.04	142.01
GOV	2307	INTERVIEW RM	Conference & Meeting Rooms	1		1	24ID3L T8	88	0.09	328.86	3737	1	4LED15W-2L			31	0.03	115.85	3737	0.06	213.01
GOV	2313	CT 1 ENTRY	General Work Area	1		1	24ID2L T8	58	0.06	216.75	3737	1	4LED15W-2L			31	0.03	115.85	3737	0.03	100.90
GOV	2311	MEETING ROOM	Conference & Meeting Rooms	2		2	24ID3L T8	88	0.18	328.86	1869	2	4LED15W-2L			31	0.06	115.85	1869	0.11	213.01
GOV	2312	MEETING ROOM	Conference & Meeting Rooms	2		2	24ID3L T8	88	0.18	328.86	1869	2	4LED15W-2L			31	0.06	115.85	1869	0.11	213.01
GOV		CT ROOM #1	Court Room Area	24		24	4ID2L T8	59	1.42	5291.59	3737	24	4LED18W-2L			37	0.89	3318.46	3737	0.53	1973.14
GOV		CT ROOM #1	Court Room Area	10		10	14MW2L T8	58	0.58	2167.46	3737	10	4LED13W-2L			26	0.26	971.62	3737	0.32	1195.84
GOV		CT ROOM #1	Court Room Area	10		10	RCFL1X32	32	0.32	1195.84	3737	10	LEDPLP1X12			12	0.12	448.44	3737	0.20	747.40
GOV		CT #1	EMERGENCY LIGHTING	2		2	EDL EXIT	20	0.04	149.48	3737	2	NF LEDEDL			1	0.00	7.47	3737	0.04	142.01
GOV		COORIDOR BACK	Common Areas & Hallways	44		44	24ID2L T8	58	2.55	9536.82	3737	44	4LED13W-2L			26	1.14	4275.13	3737	1.41	5261.70
GOV		COORIDOR BACK	EMERGENCY LIGHTING	5		5	RLED	3	0.02	56.06	3737	0	DNR			0	0.02	56.06	3737	0.00	0.00
GOV		COORIDOR BACK	EMERGENCY LIGHTING	2		2	EDL EXIT	20	0.04	149.48	3737	2	NF LEDEDL			1	0.00	7.47	3737	0.04	142.01
GOV		COORIDOR BACK	Common Areas & Hallways	2		2	RCFL1X32	32	0.06	239.17	3737	2	LEDPLP1X12			12	0.02	89.69	3737	0.04	149.48
GOV	2319	JUDGES OFF	PRIVATE OFFICE	4		4	24ID3L T8	88	0.35	1315.42	3737	4	4LED15W-2L			31	0.12	463.39	3737	0.23	852.04
GOV	2319	JUDGES OFF	PRIVATE OFFICE	1		1	RCFL2X32	51	0.05	190.59	3737	1	LEDPL2X12			24	0.02	89.69	3737	0.03	100.90
GOV	2319	JUDGES OFF RR	PRIVATE OFFICE	2		2	4ID1L T8	30	0.06	224.22	3737	2	4LED18W-1L			18	0.04	134.53	3737	0.02	89.69
GOV	2319	JUDGES OFF RR	PRIVATE OFFICE	1		1	RCFL1X32	32	0.03	119.58	3737	1	LEDPLP1X12			12	0.01	44.84	3737	0.02	74.74
GOV	2316	JUDGES OFF	PRIVATE OFFICE	4		4	24ID3L T8	88	0.35	1315.42	3737	4	4LED15W-2L			31	0.12	463.39	3737	0.23	852.04

GOV	2316	JUDGES OFF	PRIVATE OFFICE	1		1	RCFL2X32	51	0.05	190.59	3737	1	LEDPL2X12			24	0.02	89.69	3737	0.03	100.90
GOV	2316	JUDGES OFF RR	PRIVATE OFFICE	2		2	4ID1L T8	30	0.06	224.22	3737	2	4LED18W-1L			18	0.04	134.53	3737	0.02	89.69
GOV	2316	JUDGES OFF RR	PRIVATE OFFICE	1		1	RCFL1X32	32	0.03	119.58	3737	1	LEDPLP1X12			12	0.01	44.84	3737	0.02	74.74
GOV	2301	JUDGES OFF	PRIVATE OFFICE	4		4	24ID3L T8	88	0.35	1315.42	3737	4	4LED15W-2L			31	0.12	463.39	3737	0.23	852.04
GOV	2301	JUDGES OFF	PRIVATE OFFICE	1		1	RCFL2X32	51	0.05	190.59	3737	1	LEDPL2X12			24	0.02	89.69	3737	0.03	100.90
GOV	2301	JUDGES OFF RR	PRIVATE OFFICE	2		2	4ID1L T8	30	0.06	224.22	3737	2	4LED18W-1L			18	0.04	134.53	3737	0.02	89.69
GOV	2301	JUDGES OFF RR	PRIVATE OFFICE	1		1	RCFL1X32	32	0.03	119.58	3737	1	LEDPLP1X12			12	0.01	44.84	3737	0.02	74.74
GOV	2283	PVT OFF	PRIVATE OFFICE	2		2	24ID3L T8	88	0.18	328.86	1869	2	4LED15W-2L			31	0.06	115.85	1869	0.11	213.01
GOV	2282	PVT OFF	PRIVATE OFFICE	2		2	24ID3L T8	88	0.18	328.86	1869	2	4LED15W-2L			31	0.06	115.85	1869	0.11	213.01
GOV	2279	PVT OFF	PRIVATE OFFICE	2		2	24ID3L T8	88	0.18	328.86	1869	2	4LED15W-2L			31	0.06	115.85	1869	0.11	213.01
GOV	2277	STORAGE	Storage Room	2		2	24ID3L T8	88	0.18	328.86	1869	2	4LED13W-2L			26	0.05	97.16	1869	0.12	231.69
GOV	2276	CONF RM	Conference & Meeting Rooms	4		4	24ID3L T8	88	0.35	657.71	1869	4	4LED15W-2L			31	0.12	231.69	1869	0.23	426.02
GOV	251	ELEC RM	Mechanical/Electrical Room	2		2	4S2L T8	59	0.12	440.97	3737	2	4LED13W-2L	1	SW-CTDN	26	0.05	136.03	2616	0.07	304.94
GOV	252	DATA RM	Mechanical/Electrical Room	2		2	4S2L T8	59	0.12	440.97	3737	2	4LED13W-2L	1	SW-CTDN	26	0.05	136.03	2616	0.07	304.94
GOV	2276	FILE RM	Storage Room	4		4	24ID3L T8	88	0.35	657.71	1869	4	4LED13W-2L		Dim	26	0.10	136.03	1308	0.25	521.69
GOV	2286	JC	Janitors Closet	1		1	24ID2L T8	58	0.06	216.75	3737	1	4LED13W-2L			26	0.03	97.16	3737	0.03	119.58
GOV	2275	JURY ROOM	Conference & Meeting Rooms	5		5	24ID3L T8	88	0.44	822.14	1869	5	4LED15W-2L			31	0.16	289.62	1869	0.29	532.52
GOV	2275	JURY ROOM RR	PRIVATE RESTROOM	2		2	4ID1L T8	30	0.06	112.11	1869	2	4LED15W-1L			15	0.03	56.06	1869	0.03	56.06
GOV	2275	JURY ROOM RR	PRIVATE RESTROOM	1		1	RCFL1X32	32	0.03	59.79	1869	1	LEDPLP1X12			12	0.01	22.42	1869	0.02	37.37
GOV	2275	JURY ROOM RR	PRIVATE RESTROOM	2		2	4ID1L T8	30	0.06	112.11	1869	2	4LED15W-1L			15	0.03	56.06	1869	0.03	56.06
GOV	2275	JURY ROOM RR	PRIVATE RESTROOM	1		1	RCFL1X32	32	0.03	59.79	1869	1	LEDPLP1X12			12	0.01	22.42	1869	0.02	37.37
GOV	2272	JURY ROOM	Conference & Meeting Rooms	5		5	24ID3L T8	88	0.44	822.14	1869	5	4LED15W-2L			31	0.16	289.62	1869	0.29	532.52
GOV	2272	JURY ROOM RR	PRIVATE RESTROOM	2		2	4ID1L T8	30	0.06	112.11	1869	2	4LED15W-1L			15	0.03	56.06	1869	0.03	56.06
GOV	2272	JURY ROOM RR	PRIVATE RESTROOM	1		1	RCFL1X32	32	0.03	59.79	1869	1	LEDPLP1X12			12	0.01	22.42	1869	0.02	37.37
GOV	2272	JURY ROOM RR	PRIVATE RESTROOM	2		2	4ID1L T8	30	0.06	112.11	1869	2	4LED15W-1L			15	0.03	56.06	1869	0.03	56.06
GOV	2272	JURY ROOM RR	PRIVATE RESTROOM	1		1	RCFL1X32	32	0.03	59.79	1869	1	LEDPLP1X12			12	0.01	22.42	1869	0.02	37.37
GOV	2252	JURY ROOM	Conference & Meeting Rooms	5		5	24ID3L T8	88	0.44	822.14	1869	5	4LED15W-2L			31	0.16	289.62	1869	0.29	532.52
GOV	2252	JURY ROOM RR	PRIVATE RESTROOM	2		2	4ID1L T8	30	0.06	112.11	1869	2	4LED15W-1L			15	0.03	56.06	1869	0.03	56.06
GOV	2252	JURY ROOM RR	PRIVATE RESTROOM	1		1	RCFL1X32	32	0.03	59.79	1869	1	LEDPLP1X12			12	0.01	22.42	1869	0.02	37.37
GOV	2249	JUDGES OFF	PRIVATE OFFICE	4		4	24ID3L T8	88	0.35	1315.42	3737	4	4LED15W-2L			31	0.12	463.39	3737	0.23	852.04
GOV	2249	JUDGES OFF	PRIVATE OFFICE	1		1	RCFL2X32	51	0.05	190.59	3737	1	LEDPL2X12			24	0.02	89.69	3737	0.03	100.90
GOV	2249	JUDGES OFF RR	PRIVATE OFFICE	2		2	4ID1L T8	30	0.06	224.22	3737	2	4LED18W-1L			18	0.04	134.53	3737	0.02	89.69
GOV	2249	JUDGES OFF RR	PRIVATE OFFICE	1		1	RCFL1X32	32	0.03	119.58	3737	1	LEDPLP1X12			12	0.01	44.84	3737	0.02	74.74
GOV	2247	JURY ROOM	Conference & Meeting Rooms	5		5	24ID3L T8	88	0.44	822.14	1869	5	4LED15W-2L			31	0.16	289.62	1869	0.29	532.52
GOV	2247	JURY ROOM RR	PRIVATE RESTROOM	2		2	4ID1L T8	30	0.06	112.11	1869	2	4LED15W-1L			15	0.03	56.06	1869	0.03	56.06
GOV	2247	JURY ROOM RR	PRIVATE RESTROOM	1		1	RCFL1X32	32	0.03	59.79	1869	1	LEDPLP1X12			12	0.01	22.42	1869	0.02	37.37
GOV	2244	PVT OFF	PRIVATE OFFICE	2		2	24ID3L T8	88	0.18	328.86	1869	2	4LED15W-2L			31	0.06	115.85	1869	0.11	213.01
GOV	2243	PVT OFF	PRIVATE OFFICE	4		4	24ID3L T8	88	0.35	657.71	1869	4	4LED15W-2L			31	0.12	231.69	1869	0.23	426.02
GOV	2242	CONF RM	Conference & Meeting Rooms	3		3	24ID3L T8	88	0.26	493.28	1869	3	4LED15W-2L			31	0.09	173.77	1869	0.17	319.51
GOV		WRR	PRIVATE RESTROOM	2		2	4ID1L T8	30	0.06	112.11	1869	2	4LED15W-1L			15	0.03	56.06	1869	0.03	56.06
GOV		WRR	PRIVATE RESTROOM	1		1	RCFL1X32	32	0.03	59.79	1869	1	LEDPLP1X12			12	0.01	22.42	1869	0.02	37.37
GOV	251	DATA RM	Mechanical/Electrical Room	2		2	4S2L T8	59	0.12	440.97	3737	2	4LED13W-2L	1	SW-CTDN	26	0.05	136.03	2616	0.07	304.94
GOV	2227	BREAK RM	Break & Loung Areas	6		6	24ID3L T8	88	0.53	986.57	1869	6	4LED13W-2L			26	0.16	291.49	1869	0.37	695.08
GOV	253	MECH RM	Mechanical/Electrical Room	2		2	4S2L T8	59	0.12	440.97	3737	2	4LED13W-2L	1	SW-CTDN	26	0.05	136.03	2616	0.07	304.94
GOV		MRR	Common Restroom	2		2	4ID1L T8	30	0.06	112.11	1869	2	4LED15W-1L			15	0.03	56.06	1869	0.03	56.06
GOV		MRR	Common Restroom	1		1	RCFL1X32	32	0.03	59.79	1869	1	LEDPLP1X12			12	0.01	22.42	1869	0.02	37.37
GOV	2254	AV STORAGE	Storage Room	1		1	4S2L T8	59	0.06	220.48	3737	1	4LED13W-2L			26	0.03	97.16	3737	0.03	123.32
GOV	2269	AV STORAGE	Storage Room	1		1	4S2L T8	59	0.06	220.48	3737	1	4LED13W-2L			26	0.03	97.16	3737	0.03	123.32
GOV	2299	AV STORAGE	Storage Room	1		1	4S2L T8	59	0.06	220.48	3737	1	4LED13W-2L			26	0.03	97.16	3737	0.03	123.32
GOV	2320	AV STORAGE	Storage Room	1		1	4S2L T8	59	0.06	220.48	3737	1	4LED13W-2L			26	0.03	97.16	3737	0.03	123.32
GOV		OVER ELEV DOORS	Common Areas & Hallways	4		4	4ID1L T8	30	0.12	448.44	3737	4	4LED15W-1L			15	0.06	224.22	3737	0.06	224.22
GOV		OVER ELEV DOORS	Common Areas & Hallways	1		1	2ID1L T8	18	0.02	67.27	3737	1	2LED10W-1L			10	0.01	37.37	3737	0.01	29.90
GOV		ELEV LOBBY	Common Areas & Hallways	8	1	7	24ID2L T8	58	0.41	1517.22	3737	8	4LED13W-2L			26	0.21	777.30	3737	0.20	739.93
GOV		ELEV LOBBY MECH	Common Areas & Hallways	1		1	4S2L T8	59	0.06	220.48	3737	1	4LED13W-2L			26	0.03	97.16	3737	0.03	123.32
GOV		ELEV LOBBY	EMERGENCY LIGHTING	1	1	0	EDL EXIT	20	0.00	0.00	3737	1	NF LEDEDL			1	0.00	3.74	3737	0.00	-3.74
GOV		CENTER STAIRS BOTTOM	STAIRS AND ELEVATORS	0		0	LED	14	0.00	0.00	3737	0	DNR			0	0.00	0.00	3737	0.00	0.00
GOV		CENTER STAIRS TOP	STAIRS AND ELEVATORS	12	7	5	RCFL1X32	32	0.16	597.92	3737	12	LEDPLP1X12			12	0.14	538.13	3737	0.02	59.79
GOV		MAIN ATRIUM	Common Areas & Hallways	56		56	RCFL1X42	42	2.35	8789.42	3737	56	CCK-22W			22	1.23	4603.98	3737	1.12	4185.44
GOV		MAIN ATRIUM VESTIBULES	Common Areas & Hallways	4		4	RCFL1X32	32	0.13	478.34	3737	4	LEDPLP1X12			12	0.05	179.38	3737	0.08	298.96
GOV		MAIN ATRIUM	EMERGENCY LIGHTING	6		6	EDL EXIT	20	0.12	448.44	3737	6	NF LEDEDL			1	0.01	22.42	3737	0.11	426.02
GOV		CENTER LOBBY	Common Areas & Hallways	54		54	4ID1L T8	30	1.62	6053.94	3737	54	4LED15W-1L			15	0.81	3026.97	3737	0.81	3026.97
GOV		CENTER LOBBY	Common Areas & Hallways	24		24	RCFL1X32	32	0.77	2870.02	3737	24	LEDPLP1X12			12	0.29	1076.26	3737	0.48	1793.76
GOV		CENTER ROTUNDRA	Common Areas & Hallways	12		12	FL MH-250	295	3.54	13228.98	3737	12	NF FL LED-90W			91	1.09	4080.80	3737	2.45	9148.18
GOV		FRONT RR	Common Areas & Hallways	7		7	24ID3L T8	88	0.62	2301.99	3737	7	4LED13W-2L			26	0.18	680.13	3737	0.43	1621.86
GOV		FRONT RR	Common Areas & Hallways	2		2	RCFL1X32	32	0.06	239.17	3737	2	LEDPLP1X12			12	0.02	89.69	3737	0.04	149.48
GOV		MRR	Common Restroom	6		6	4ID2L T8	59	0.35	1322.90	3737	6	4LED15W-2L			31	0.19	695.08	3737	0.17	627.82
GOV		MRR	Common Restroom	5		5	RCFL1X32	32	0.16	597.92	3737	5	LEDPLP1X12			12	0.06	224.22	3737	0.10	373.70
GOV		MRR	Common Restroom	6		6	WM CFL2X9	23	0.14	515.71	3737	6	LEDPL2X9			18	0.11	403.60	3737	0.03	112.11
GOV		WRR	Common Restroom	6		6	4ID2L T8	59	0.35	1322.90	3737	6	4LED15W-2L			31	0.19	695.08	3737	0.17	627.82
GOV		WRR	Common Restroom	5		5	RCFL1X32	32	0.16	597.92	3737	5	LEDPLP1X12			12	0.06	224.22	3737	0.10	373.70
GOV		WRR	Common Restroom	6		6	WM CFL2X9	23	0.14	515.71	3737	6	LEDPL2X9			18	0.11	403.60	3737	0.03	112.11
GOV		FRONT CAFÉ HALL	Common Areas & Hallways	14		14	24ID3L T8	88	1.23	4603.98	3737	14	4LED13W-2L			26	0.36	1360.27	3737	0.87	3243.72
GOV		FRONT CAFÉ HALL	EMERGENCY LIGHTING	3		3	EDL EXIT	20	0.06	224.22	3737	3	NF LEDEDL			1	0.00	11.21	3737	0.06	213.01
GOV		FRONT CAFÉ HALL	Common Areas & Hallways	4		4	RCFL1X32	32	0.13	478.34	3737	4	LEDPLP1X12			12	0.05	179.38	3737	0.08	298.96

GOV	1036	GEN WK AREA	General Work Area	11		11	24ID3L T8	88	0.97	3617.42	3737	11	4LED15W-2L			31	0.34	1274.32	3737	0.63	2343.10
GOV	1036	GEN WK AREA	EMERGENCY LIGHTING	2		2	EDL EXIT	20	0.04	149.48	3737	2	NF LEDEDL			1	0.00	7.47	3737	0.04	142.01
GOV		PVT OFF	PRIVATE OFFICE	1		1	24ID3L T8	88	0.09	164.43	1869	1	4LED15W-2L			31	0.03	57.92	1869	0.06	106.50
GOV		PVT OFF	PRIVATE OFFICE	1		1	24ID3L T8	88	0.09	164.43	1869	1	4LED15W-2L			31	0.03	57.92	1869	0.06	106.50
GOV		RR	General Work Area	2		2	4ID2L T8	59	0.12	440.97	3737	2	4LED18W-2L			37	0.07	276.54	3737	0.04	164.43
GOV		RR	General Work Area	1		1	RCFL1X32	32	0.03	119.58	3737	1	LEDPLP1X12			12	0.01	44.84	3737	0.02	74.74
GOV		STORAGE RM	Storage Room	1		1	24ID3L T8	88	0.09	164.43	1869	1	4LED13W-2L			26	0.03	48.58	1869	0.06	115.85
GOV		BREAK/ELEC RM	General Work Area	2		2	24ID3L T8	88	0.18	328.86	1869	2	4LED15W-2L			31	0.06	115.85	1869	0.11	213.01
GOV	1101	DINING AREA	DINING AREA	24		24	24ID3L T8	88	2.11	3946.27	1869	24	4LED13W-2L			26	0.62	1165.94	1869	1.49	2780.33
GOV	1101	DINING AREA SERVING	DINING AREA	4		4	RCFL1X32	32	0.13	239.17	1869	4	LEDPLP1X12			12	0.05	89.69	1869	0.08	149.48
GOV	113	DATA ROOM	Mechanical/Electrical Room	2		2	4S2L T8	59	0.12	440.97	3737	2	4LED13W-2L	1	SW-CTDN	26	0.05	136.03	2616	0.07	304.94
GOV	A108	ELEC ROOM	Mechanical/Electrical Room	2		2	4S2L T8	59	0.12	440.97	3737	2	4LED13W-2L	1	SW-CTDN	26	0.05	136.03	2616	0.07	304.94
GOV	1	MEETING ROOM	Conference & Meeting Rooms	12		12	4ID2L T8	59	0.71	1322.90	1869	12	4LED18W-2L			37	0.44	829.61	1869	0.26	493.28
GOV	2	MEETING ROOM	Conference & Meeting Rooms	12		12	4ID2L T8	59	0.71	1322.90	1869	12	4LED18W-2L			37	0.44	829.61	1869	0.26	493.28
GOV	3	MEETING ROOM	Conference & Meeting Rooms	12		12	4ID2L T8	59	0.71	1322.90	1869	12	4LED18W-2L			37	0.44	829.61	1869	0.26	493.28
GOV	4	MEETING ROOM	Conference & Meeting Rooms	12		12	4ID2L T8	59	0.71	1322.90	1869	12	4LED18W-2L			37	0.44	829.61	1869	0.26	493.28
GOV		LG JC OFF	General Work Area	7		7	24ID3L T8	88	0.62	2301.99	3737	7	4LED15W-2L			31	0.22	810.93	3737	0.40	1491.06
GOV		LG JC OFF RR	General Work Area	2		2	4ID1L T8	30	0.06	224.22	3737	2	4LED18W-1L			18	0.04	134.53	3737	0.02	89.69
GOV		LG JC OFF RR	General Work Area	3		3	RCFL1X32	32	0.10	358.75	3737	3	LEDPLP1X12			12	0.04	134.53	3737	0.06	224.22
GOV		LG JC OFF RR	General Work Area	2		2	4ID1L T8	30	0.06	224.22	3737	2	4LED18W-1L			18	0.04	134.53	3737	0.02	89.69
GOV		LG JC OFF RR	General Work Area	3		3	RCFL1X32	32	0.10	358.75	3737	3	LEDPLP1X12			12	0.04	134.53	3737	0.06	224.22
GOV		JC MAIN HALL	Janitors Closet	1		1	24TP2L T8	59	0.06	220.48	3737	1	4LED15W-2L			31	0.03	115.85	3737	0.03	104.64
GOV		ADMIN HALL	Common Areas & Hallways	7		7	24ID2L T8	58	0.41	1517.22	3737	7	4LED13W-2L			26	0.18	680.13	3737	0.22	837.09
GOV		ADMIN AREA	General Work Area	4		4	24ID2L T8	58	0.23	433.49	1869	4	4LED15W-2L			31	0.12	231.69	1869	0.11	201.80
GOV	1203	ADMIN PVT OFF	General Work Area	2		2	24ID2L T8	58	0.12	216.75	1869	2	4LED15W-2L			31	0.06	115.85	1869	0.05	100.90
GOV	1202	ADMIN PVT OFF	General Work Area	2		2	24ID2L T8	58	0.12	216.75	1869	2	4LED15W-2L			31	0.06	115.85	1869	0.05	100.90
GOV	1206	IT GEN WK AREA	General Work Area	2		2	24EP2L	72	0.14	538.13	3737	2	4LED18W-2L			37	0.07	276.54	3737	0.07	261.59
GOV	1206	IT GEN BACK HALL	General Work Area	3		3	24EP2L	72	0.22	807.19	3737	3	4LED18W-2L			37	0.11	414.81	3737	0.11	392.39
GOV	1207	IT GEN CONF RM	General Work Area	4		4	24EP2L	72	0.29	538.13	1869	4	4LED18W-2L			37	0.15	276.54	1869	0.14	261.59
GOV	1208	IT PVT OFF	General Work Area	2		2	24EP2L	72	0.14	269.06	1869	2	4LED18W-2L			37	0.07	138.27	1869	0.07	130.80
GOV	1211	IT PVT OFF	General Work Area	2		2	24EP2L	72	0.14	269.06	1869	2	4LED18W-2L			37	0.07	138.27	1869	0.07	130.80
GOV	1215	IT OPEN OFF	General Work Area	14		14	24EP2L	72	1.01	1883.45	1869	14	4LED18W-2L			37	0.52	967.88	1869	0.49	915.57
GOV	1215	IT OPEN OFF	EMERGENCY LIGHTING	2		2	RLED	3	0.01	11.21	1869	0	DNR			0	0.01	11.21	1869	0.00	0.00
GOV	1217	IT OPEN OFF BREAK	EMERGENCY LIGHTING	1		1	24ID2L T8	58	0.06	108.37	1869	1	4LED15W-2L			31	0.03	57.92	1869	0.03	50.45
GOV	1219	IT OPEN OFF STORAGE	EMERGENCY LIGHTING	8		8	24TP3L T8	88	0.70	1315.42	1869	8	4LED18W-2L 24W			37	0.30	553.08	1869	0.41	762.35
GOV	124	DATA ROOM	Mechanical/Electrical Room	4		4	4S2L T8	59	0.24	440.97	1869	4	4LED13W-2L	1	SW-CTDN	26	0.10	136.03	1308	0.13	304.94
GOV	1214	IT FILE RM	General Work Area	2		2	24EP2L	72	0.14	269.06	1869	2	4LED18W-2L			37	0.07	138.27	1869	0.07	130.80
GOV	1213	IT PVT OFF	General Work Area	2		2	24EP2L	72	0.14	269.06	1869	2	4LED18W-2L			37	0.07	138.27	1869	0.07	130.80
GOV	1210	IT PVT OFF	General Work Area	2		2	24EP2L	72	0.14	269.06	1869	2	4LED18W-2L			37	0.07	138.27	1869	0.07	130.80
GOV	1209	IT PVT OFF	General Work Area	2		2	24EP2L	72	0.14	269.06	1869	2	4LED18W-2L			37	0.07	138.27	1869	0.07	130.80
GOV	1262	INTERVIEW ENTRY	Common Areas & Hallways	2		2	24ID2L T8	58	0.12	433.49	3737	2	4LED13W-2L			26	0.05	194.32	3737	0.06	239.17
GOV	1263	INTERVIEW ROOM	Common Areas & Hallways	1		1	24ID2L T8	58	0.06	216.75	3737	1	4LED13W-2L			26	0.03	97.16	3737	0.03	119.58
GOV	1264	INTERVIEW ROOM	Common Areas & Hallways	1		1	24ID2L T8	58	0.06	216.75	3737	1	4LED13W-2L			26	0.03	97.16	3737	0.03	119.58
GOV	1265	INTERVIEW ROOM	Common Areas & Hallways	1		1	24ID2L T8	58	0.06	216.75	3737	1	4LED13W-2L			26	0.03	97.16	3737	0.03	119.58
GOV		DETENTION HALLWAY	Common Areas & Hallways	32		32	24VP3L T8	88	2.82	10523.39	3737	32	4LED13W-3L			40	1.28	4783.36	3737	1.54	5740.03
GOV		DETENTION HALLWAY	EMERGENCY LIGHTING	4		4	VP RLED	3	0.01	44.84	3737	0	DNR			0	0.01	44.84	3737	0.00	0.00
GOV	1260	VISITATION CELL	VISITATION CELL	1		1	14TP2L T8	59	0.06	220.48	3737	1	4LED13W-2L			26	0.03	97.16	3737	0.03	123.32
GOV	1259	VISITATION CELL	VISITATION CELL	1		1	14TP2L T8	59	0.06	220.48	3737	1	4LED13W-2L			26	0.03	97.16	3737	0.03	123.32
GOV	1258	VISITATION CELL	VISITATION CELL	1		1	14TP2L T8	59	0.06	220.48	3737	1	4LED13W-2L			26	0.03	97.16	3737	0.03	123.32
GOV	1252	OFFICER AREA	General Work Area	6		6	24VP3L T8	88	0.53	1973.14	3737	6	4LED13W-3L			40	0.24	896.88	3737	0.29	1076.26
GOV	1257	STORAGE AREA	General Work Area	2		2	14VP2L T8	58	0.12	433.49	3737	2	4LED13W-2L			26	0.05	194.32	3737	0.06	239.17
GOV	1256	STORAGE AREA	General Work Area	2		2	14VP2L T8	58	0.12	433.49	3737	2	4LED13W-2L			26	0.05	194.32	3737	0.06	239.17
GOV	1255	INMATE CELL AREA	General Work Area	1		1	14VP2L T8	58	0.06	216.75	3737	1	4LED13W-2L			26	0.03	97.16	3737	0.03	119.58
GOV		BATHROOM AREA X2	General Work Area	2		2	14VP2L T8	58	0.12	433.49	3737	2	4LED13W-2L			26	0.05	194.32	3737	0.06	239.17
GOV	1250	OFFICER AREA	General Work Area	2		2	24VP3L T8	88	0.18	328.86	1869	2	4LED13W-3L			40	0.08	149.48	1869	0.10	179.38
GOV	1247	OFFICER BREAK RM	General Work Area	4		4	24TP3L T8	88	0.35	657.71	1869	4	4LED18W-2L 24W			37	0.15	276.54	1869	0.20	381.17
GOV	1249	OFFICER BREAK RM STORAGE	Storage Room	1		1	24TP3L T8	88	0.09	164.43	1869	1	4LED15W-2L 24W			31	0.03	57.92	1869	0.06	106.50
GOV	1249	OFFICER BREAK RM RR	General Work Area	1		1	24TP3L T8	88	0.09	164.43	1869	1	4LED18W-2L 24W			37	0.04	69.13	1869	0.05	95.29
GOV		CONTROL BOOTH	General Work Area	8		8	RCFL1X32	32	0.26	956.67	3737	8	LEDPL1X12			12	0.10	358.75	3737	0.16	597.92
GOV		CONTROL BOOTH STORAGE	Storage Room	1		1	24TP2L T8	59	0.06	220.48	3737	1	4LED15W-2L			31	0.03	115.85	3737	0.03	104.64
GOV	1242	WORK AREA	General Work Area	4		4	24TP2L T8	59	0.24	881.93	3737	4	4LED18W-2L			37	0.15	553.08	3737	0.09	328.86
GOV		SALLEY PORT VESTIBULE	Common Areas & Hallways	1		1	24VP3L T8	88	0.09	328.86	3737	1	4LED13W-3L			40	0.04	149.48	3737	0.05	179.38
GOV		SALLEY PORT VESTIBULE	EMERGENCY LIGHTING	1		1	RLED	3	0.00	11.21	3737	0	DNR			0	0.00	11.21	3737	0.00	0.00
GOV	1307	HOLDING TANK	General Work Area	4		4	24VP3L T8	88	0.35	1315.42	3737	4	4LED13W-3L			40	0.16	597.92	3737	0.19	717.50
GOV	1308	HOLDING TANK	General Work Area	4		4	24VP3L T8	88	0.35	1315.42	3737	4	4LED13W-3L			40	0.16	597.92	3737	0.19	717.50
GOV	1309	HOLDING TANK	General Work Area	4		4	24VP3L T8	88	0.35	1315.42	3737	4	4LED13W-3L			40	0.16	597.92	3737	0.19	717.50
GOV	1311-14	HOLDING TANK ENTRY	General Work Area	1		1	14VP2L T8	58	0.06	216.75	3737	1	4LED13W-2L			26	0.03	97.16	3737	0.03	119.58
GOV	1311-14	HOLDING TANKS	General Work Area	12		12	24VP3L T8	88	1.06	3946.27	3737	12	4LED13W-3L			40	0.48	1793.76	3737	0.58	2152.51
GOV	1316-18	HOLDING TANK ENTRY	General Work Area	1		1	14VP2L T8	58	0.06	216.75	3737	1	4LED13W-2L			26	0.03	97.16	3737	0.03	119.58
GOV	1316-18	HOLDING TANKS	General Work Area	12		12	24VP3L T8	88	1.06	3946.27	3737	12	4LED13W-3L			40	0.48	1793.76	3737	0.58	2152.51
GOV		ELEV LOBBY E	Common Areas & Hallways	1		1	24VP3L T8	88	0.09	328.86	3737	1	4LED13W-3L			40	0.04	149.48	3737	0.05	179.38
GOV		ELEV LOBBY W	Common Areas & Hallways	1		1	24VP3L T8	88	0.09	328.86	3737	1	4LED13W-3L			40	0.04	149.48	3737	0.05	179.38
GOV	1268	JUV PROB ENTRY	General Work Area	6		6	24ID2L T8	58	0.35	650.24	1869	6	4LED15W-2L			31	0.19	347.54	1869	0.16	302.70
GOV	1268	JUV PROB GEN WK	General Work Area	21		21	24ID2L T8	58	1.22	2275.83	1869	21	4LED15W-2L			31	0.65	1216.39	1869	0.57	1059.44

GOV		JUV PROB EXITS	EMERGENCY LIGHTING	3		3	RLED	3	0.01	33.63	3737	0	DNR			0	0.01	33.63	3737	0.00	0.00
GOV	1267	FILE RM	General Work Area	4		4	24ID3L T8	88	0.35	657.71	1869	4	4LED15W-2L			31	0.12	231.69	1869	0.23	426.02
GOV		VESTIBULE TO DETENTION	Common Areas & Hallways	1		1	24ID2L T8	58	0.06	216.75	3737	1	4LED13W-2L			26	0.03	97.16	3737	0.03	119.58
GOV	1271	INTERVIEW RM	Conference & Meeting Rooms	2		2	24ID3L T8	88	0.18	328.86	1869	2	4LED15W-2L			31	0.06	115.85	1869	0.11	213.01
GOV		WRR	Common Restroom	2		2	4ID1L T8	30	0.06	112.11	1869	2	4LED15W-1L			15	0.03	56.06	1869	0.03	56.06
GOV		WRR	Common Restroom	1		1	RCFL1X32	32	0.03	59.79	1869	1	LEDPLP1X12			12	0.01	22.42	1869	0.02	37.37
GOV	1273	JC	Janitors Closet	1		1	24TP2L T8	59	0.06	110.24	1869	1	4LED15W-2L			31	0.03	57.92	1869	0.03	52.32
GOV		MRR	Common Restroom	2		2	4ID1L T8	30	0.06	112.11	1869	2	4LED15W-1L			15	0.03	56.06	1869	0.03	56.06
GOV		MRR	Common Restroom	1		1	RCFL1X32	32	0.03	59.79	1869	1	LEDPLP1X12			12	0.01	22.42	1869	0.02	37.37
GOV	1277	PVT OFF	PRIVATE OFFICE	2		2	24ID3L T8	88	0.18	328.86	1869	2	4LED15W-2L			31	0.06	115.85	1869	0.11	213.01
GOV	1279	PVT OFF	PRIVATE OFFICE	2		2	24ID3L T8	88	0.18	328.86	1869	2	4LED15W-2L			31	0.06	115.85	1869	0.11	213.01
GOV	1282	PVT OFF	PRIVATE OFFICE	2		2	24ID3L T8	88	0.18	328.86	1869	2	4LED15W-2L			31	0.06	115.85	1869	0.11	213.01
GOV	1284	PVT OFF	PRIVATE OFFICE	2		2	24ID3L T8	88	0.18	328.86	1869	2	4LED15W-2L			31	0.06	115.85	1869	0.11	213.01
GOV	1286	PVT OFF	PRIVATE OFFICE	2		2	24ID3L T8	88	0.18	328.86	1869	2	4LED15W-2L			31	0.06	115.85	1869	0.11	213.01
GOV	1288	STORAGE	General Work Area	1		1	24ID3L T8	88	0.09	328.86	3737	1	4LED15W-2L			31	0.03	115.85	3737	0.06	213.01
GOV	1294	PVT OFF	PRIVATE OFFICE	2		2	24ID3L T8	88	0.18	328.86	1869	2	4LED15W-2L			31	0.06	115.85	1869	0.11	213.01
GOV	1295	PVT OFF	PRIVATE OFFICE	2		2	24ID3L T8	88	0.18	328.86	1869	2	4LED15W-2L			31	0.06	115.85	1869	0.11	213.01
GOV	1298	PVT OFF	PRIVATE OFFICE	2		2	24ID3L T8	88	0.18	328.86	1869	2	4LED15W-2L			31	0.06	115.85	1869	0.11	213.01
GOV	1300	PVT OFF	PRIVATE OFFICE	2		2	24ID3L T8	88	0.18	328.86	1869	2	4LED15W-2L			31	0.06	115.85	1869	0.11	213.01
GOV	1301	PVT OFF	PRIVATE OFFICE	2		2	24ID3L T8	88	0.18	328.86	1869	2	4LED15W-2L			31	0.06	115.85	1869	0.11	213.01
GOV	1304	STORAGE	General Work Area	2		2	24ID3L T8	88	0.18	328.86	1869	2	4LED15W-2L			31	0.06	115.85	1869	0.11	213.01
GOV	1303	PVT OFF	PRIVATE OFFICE	2		2	24ID3L T8	88	0.18	328.86	1869	2	4LED15W-2L			31	0.06	115.85	1869	0.11	213.01
GOV	1302	PVT OFF	PRIVATE OFFICE	2		2	24ID3L T8	88	0.18	328.86	1869	2	4LED15W-2L			31	0.06	115.85	1869	0.11	213.01
GOV	1299	PVT OFF	PRIVATE OFFICE	2		2	24ID3L T8	88	0.18	328.86	1869	2	4LED15W-2L			31	0.06	115.85	1869	0.11	213.01
GOV	1297	PVT OFF	PRIVATE OFFICE	2		2	24ID3L T8	88	0.18	328.86	1869	2	4LED15W-2L			31	0.06	115.85	1869	0.11	213.01
GOV	1296	PVT OFF	PRIVATE OFFICE	2		2	24ID3L T8	88	0.18	328.86	1869	2	4LED15W-2L			31	0.06	115.85	1869	0.11	213.01
GOV	1293	PVT OFF	PRIVATE OFFICE	2		2	24ID3L T8	88	0.18	328.86	1869	2	4LED15W-2L			31	0.06	115.85	1869	0.11	213.01
GOV	1292	PVT OFF	PRIVATE OFFICE	2		2	24ID3L T8	88	0.18	328.86	1869	2	4LED15W-2L			31	0.06	115.85	1869	0.11	213.01
GOV	1289	PVT OFF	PRIVATE OFFICE	2		2	24ID3L T8	88	0.18	328.86	1869	2	4LED15W-2L			31	0.06	115.85	1869	0.11	213.01
GOV	1287	PVT OFF	PRIVATE OFFICE	2		2	24ID3L T8	88	0.18	328.86	1869	2	4LED15W-2L			31	0.06	115.85	1869	0.11	213.01
GOV	1285	PVT OFF	PRIVATE OFFICE	2		2	24ID3L T8	88	0.18	328.86	1869	2	4LED15W-2L			31	0.06	115.85	1869	0.11	213.01
GOV	1283	PVT OFF	PRIVATE OFFICE	2		2	24ID3L T8	88	0.18	328.86	1869	2	4LED15W-2L			31	0.06	115.85	1869	0.11	213.01
GOV	1280	PVT OFF	PRIVATE OFFICE	2		2	24ID3L T8	88	0.18	328.86	1869	2	4LED15W-2L			31	0.06	115.85	1869	0.11	213.01
GOV	1278	PVT OFF	PRIVATE OFFICE	2		2	24ID3L T8	88	0.18	328.86	1869	2	4LED15W-2L			31	0.06	115.85	1869	0.11	213.01
GOV	1276	BREAK RM	Break & Loung Areas	2		2	24ID3L T8	88	0.18	328.86	1869	2	4LED13W-2L			26	0.05	97.16	1869	0.12	231.69
GOV	1275	CONF RM	Conference & Meeting Rooms	6		6	24ID3L T8	88	0.53	1973.14	3737	6	4LED15W-2L		Dim	31	0.19	486.56	2616	0.34	1486.58
GOV		MAIN HALL EAST	Common Areas & Hallways	24		24	RCFL1X42	42	1.01	3766.90	3737	24	CCK-22W			22	0.53	1973.14	3737	0.48	1793.76
GOV		MAIN HALL EAST	Common Areas & Hallways	6		6	4W3L T8	88	0.53	1973.14	3737	6	4LED13W-3L			40	0.24	896.88	3737	0.29	1076.26
GOV		MAIN HALL EAST	Common Areas & Hallways	22		22	CFL1X23	25	0.55	2055.35	3737	22	LEDPL1X9			9	0.20	739.93	3737	0.35	1315.42
GOV	1305	PVT COORIDOR	Common Areas & Hallways	3		3	24ID2L T8	58	0.17	650.24	3737	3	4LED13W-2L			26	0.08	291.49	3737	0.10	358.75
GOV		VESTIBULE AREA	Common Areas & Hallways	6		6	RCFL1X32	32	0.19	717.50	3737	6	LEDPLP1X12			12	0.07	269.06	3737	0.12	448.44
GOV		PROB ENTRY AREA	General Work Area	8		8	24ID2L T8	58	0.46	1733.97	3737	8	4LED15W-2L			31	0.25	926.78	3737	0.22	807.19
GOV		PROB ENTRY AREA	EMERGENCY LIGHTING	2		2	RLED	3	0.01	22.42	3737	0	DNR			0	0.01	22.42	3737	0.00	0.00
GOV	1323	CLASSROOM	Classroom - CPU Lab	4		4	24ID3L T8	88	0.35	657.71	1869	4	4LED15W-2L			31	0.12	231.69	1869	0.23	426.02
GOV	1322	CLASSROOM	Classroom - CPU Lab	4		4	24ID3L T8	88	0.35	657.71	1869	4	4LED15W-2L			31	0.12	231.69	1869	0.23	426.02
GOV		CLASSROOM C	Classroom - CPU Lab	12		12	24ID3L T8	88	1.06	1973.14	1869	12	4LED15W-2L			31	0.37	695.08	1869	0.68	1278.05
GOV		MRR	Common Restroom	2		2	4ID1L T8	30	0.06	224.22	3737	2	4LED15W-1L			15	0.03	112.11	3737	0.03	112.11
GOV		MRR	Common Restroom	1		1	RCFL1X32	32	0.03	119.58	3737	1	LEDPLP1X12			12	0.01	44.84	3737	0.02	74.74
GOV		WRR	Common Restroom	2		2	4ID1L T8	30	0.06	224.22	3737	2	4LED15W-1L			15	0.03	112.11	3737	0.03	112.11
GOV		WRR	Common Restroom	1		1	RCFL1X32	32	0.03	119.58	3737	1	LEDPLP1X12			12	0.01	44.84	3737	0.02	74.74
GOV	1386	GEN WK AREA	General Work Area	20		20	24ID3L T8	88	1.76	6577.12	3737	20	4LED15W-2L			31	0.62	2316.94	3737	1.14	4260.18
GOV	1386	GEN WK AREA	EMERGENCY LIGHTING	1		1	RLED	3	0.00	11.21	3737	0	DNR			0	0.00	11.21	3737	0.00	0.00
GOV		GEN WK 1373 HALL	Common Areas & Hallways	32		32	24ID3L T8	88	2.82	10523.39	3737	32	4LED13W-2L			26	0.83	3109.18	3737	1.98	7414.21
GOV		GEN WK 1373 HALL	EMERGENCY LIGHTING	4		4	RLED	3	0.01	44.84	3737	0	DNR			0	0.01	44.84	3737	0.00	0.00
GOV	1334	PVT OFF	PRIVATE OFFICE	2		2	24ID3L T8	88	0.18	328.86	1869	2	4LED15W-2L			31	0.06	115.85	1869	0.11	213.01
GOV	1335	PVT OFF	PRIVATE OFFICE	2		2	24ID3L T8	88	0.18	328.86	1869	2	4LED15W-2L			31	0.06	115.85	1869	0.11	213.01
GOV	1336	PVT OFF	PRIVATE OFFICE	2		2	24ID3L T8	88	0.18	328.86	1869	2	4LED15W-2L			31	0.06	115.85	1869	0.11	213.01
GOV	1337	PVT OFF	PRIVATE OFFICE	2		2	24ID3L T8	88	0.18	328.86	1869	2	4LED15W-2L			31	0.06	115.85	1869	0.11	213.01
GOV	1338	PVT OFF	PRIVATE OFFICE	2		2	24ID3L T8	88	0.18	328.86	1869	2	4LED15W-2L			31	0.06	115.85	1869	0.11	213.01
GOV	1339	PVT OFF	PRIVATE OFFICE	2		2	24ID3L T8	88	0.18	328.86	1869	2	4LED15W-2L			31	0.06	115.85	1869	0.11	213.01
GOV	1340	PVT OFF	PRIVATE OFFICE	2		2	24ID3L T8	88	0.18	328.86	1869	2	4LED15W-2L			31	0.06	115.85	1869	0.11	213.01
GOV	1341	PVT OFF	PRIVATE OFFICE	2		2	24ID3L T8	88	0.18	328.86	1869	2	4LED15W-2L			31	0.06	115.85	1869	0.11	213.01
GOV	1342	PVT OFF*	PRIVATE OFFICE	2		2	24ID3L T8	88	0.18	328.86	1869	2	4LED15W-2L			31	0.06	115.85	1869	0.11	213.01
GOV	1343	PVT OFF	PRIVATE OFFICE	2		2	24ID3L T8	88	0.18	328.86	1869	2	4LED15W-2L			31	0.06	115.85	1869	0.11	213.01
GOV	1344	PVT OFF	PRIVATE OFFICE	2		2	24ID3L T8	88	0.18	328.86	1869	2	4LED15W-2L			31	0.06	115.85	1869	0.11	213.01
GOV	1345	PVT OFF	PRIVATE OFFICE	2		2	24ID3L T8	88	0.18	328.86	1869	2	4LED15W-2L			31	0.06	115.85	1869	0.11	213.01
GOV	1346	PVT OFF	PRIVATE OFFICE	2		2	24ID3L T8	88	0.18	328.86	1869	2	4LED15W-2L			31	0.06	115.85	1869	0.11	213.01
GOV	1347	PVT OFF	PRIVATE OFFICE	2		2	24ID3L T8	88	0.18	328.86	1869	2	4LED15W-2L			31	0.06	115.85	1869	0.11	213.01
GOV	1348	PVT OFF	PRIVATE OFFICE	2		2	24ID3L T8	88	0.18	328.86	1869	2	4LED15W-2L			31	0.06	115.85	1869	0.11	213.01
GOV	1349	PVT OFF	PRIVATE OFFICE	2		2	24ID3L T8	88	0.18	328.86	1869	2	4LED15W-2L			31	0.06	115.85	1869	0.11	213.01
GOV	1358	CONF RM	Conference & Meeting Rooms	6		6	24ID3L T8	88	0.53	986.57	1869	6	4LED15W-2L			31	0.19	347.54	1869	0.34	639.03
GOV	1356	PVT OFF	PRIVATE OFFICE	2		2	24ID3L T8	88	0.18	328.86	1869	2	4LED15W-2L			31	0.06	115.85	1869	0.11	213.01
GOV	1354	PVT OFF	PRIVATE OFFICE	2		2	24ID3L T8	88	0.18	328.86	1869	2	4LED15W-2L			31	0.06	115.85	1869	0.11	213.01
GOV	1353	PVT OFF	PRIVATE OFFICE	2		2	24ID3L T8	88	0.18	328.86	1869	2	4LED15W-2L			31	0.06	115.85	1869	0.11	213.01

GOV	1352	PVT OFF	PRIVATE OFFICE	2		2	24ID3L T8	88	0.18	328.86	1869	2	4LED15W-2L			31	0.06	115.85	1869	0.11	213.01
GOV	1355	PVT OFF	PRIVATE OFFICE	2		2	24ID3L T8	88	0.18	328.86	1869	2	4LED15W-2L			31	0.06	115.85	1869	0.11	213.01
GOV	1357	PVT OFF	PRIVATE OFFICE	2		2	24ID3L T8	88	0.18	328.86	1869	2	4LED15W-2L			31	0.06	115.85	1869	0.11	213.01
GOV	1359	PVT OFF	PRIVATE OFFICE	2		2	24ID3L T8	88	0.18	328.86	1869	2	4LED15W-2L			31	0.06	115.85	1869	0.11	213.01
GOV	1360	PVT OFF	PRIVATE OFFICE	2		2	24ID3L T8	88	0.18	328.86	1869	2	4LED15W-2L			31	0.06	115.85	1869	0.11	213.01
GOV	1361	PVT OFF	PRIVATE OFFICE	2		2	24ID3L T8	88	0.18	328.86	1869	2	4LED15W-2L			31	0.06	115.85	1869	0.11	213.01
GOV	152	ELEC RM	Mechanical/Electrical Room	2		2	4S2L T8	59	0.12	440.97	3737	2	4LED13W-2L	1	SW-CTDN	26	0.05	136.03	2616	0.07	304.94
GOV	1366	PVT OFF	PRIVATE OFFICE	4		4	24ID3L T8	88	0.35	657.71	1869	4	4LED15W-2L			31	0.12	231.69	1869	0.23	426.02
GOV	151	DATA RM	Mechanical/Electrical Room	2		2	4S2L T8	59	0.12	440.97	3737	2	4LED13W-2L	1	SW-CTDN	26	0.05	136.03	2616	0.07	304.94
GOV	1364	STORAGE RM	Storage Room	2		2	24ID3L T8	88	0.18	328.86	1869	2	4LED13W-2L			26	0.05	97.16	1869	0.12	231.69
GOV	1367	PVT OFF	PRIVATE OFFICE	2		2	24ID3L T8	88	0.18	328.86	1869	2	4LED15W-2L			31	0.06	115.85	1869	0.11	213.01
GOV	1369	PVT OFF	PRIVATE OFFICE	2		2	24ID3L T8	88	0.18	328.86	1869	2	4LED15W-2L			31	0.06	115.85	1869	0.11	213.01
GOV	1370	PVT OFF	PRIVATE OFFICE	2		2	24ID3L T8	88	0.18	328.86	1869	2	4LED15W-2L			31	0.06	115.85	1869	0.11	213.01
GOV	1374	PVT OFF	PRIVATE OFFICE	2		2	24ID3L T8	88	0.18	328.86	1869	2	4LED15W-2L			31	0.06	115.85	1869	0.11	213.01
GOV	1375	PVT OFF	PRIVATE OFFICE	2		2	24ID3L T8	88	0.18	328.86	1869	2	4LED15W-2L			31	0.06	115.85	1869	0.11	213.01
GOV	1376	PVT OFF	PRIVATE OFFICE	2		2	24ID3L T8	88	0.18	328.86	1869	2	4LED15W-2L			31	0.06	115.85	1869	0.11	213.01
GOV	1372	PVT OFF	PRIVATE OFFICE	2		2	24ID3L T8	88	0.18	328.86	1869	2	4LED15W-2L			31	0.06	115.85	1869	0.11	213.01
GOV	1371	PVT OFF	PRIVATE OFFICE	2		2	24ID3L T8	88	0.18	328.86	1869	2	4LED15W-2L			31	0.06	115.85	1869	0.11	213.01
GOV	1373	FILE RM	General Work Area	6		6	24ID3L T8	88	0.53	986.57	1869	6	4LED15W-2L			31	0.19	347.54	1869	0.34	639.03
GOV	1377	PVT OFF	PRIVATE OFFICE	2		2	24ID3L T8	88	0.18	328.86	1869	2	4LED15W-2L			31	0.06	115.85	1869	0.11	213.01
GOV	1378	CONF RM	Conference & Meeting Rooms	4		4	24ID3L T8	88	0.35	657.71	1869	4	4LED15W-2L		Dim	31	0.12	162.19	1308	0.23	495.53
GOV	1379	PVT OFF	PRIVATE OFFICE	2		2	24ID3L T8	88	0.18	328.86	1869	2	4LED15W-2L			31	0.06	115.85	1869	0.11	213.01
GOV	1380	PVT OFF	PRIVATE OFFICE	2		2	24ID3L T8	88	0.18	328.86	1869	2	4LED15W-2L			31	0.06	115.85	1869	0.11	213.01
GOV	1382	PVT OFF	PRIVATE OFFICE	2		2	24ID3L T8	88	0.18	328.86	1869	2	4LED15W-2L			31	0.06	115.85	1869	0.11	213.01
GOV	1383	PVT OFF	PRIVATE OFFICE	2		2	24ID3L T8	88	0.18	328.86	1869	2	4LED15W-2L			31	0.06	115.85	1869	0.11	213.01
GOV	1384	PVT OFF	PRIVATE OFFICE	2		2	24ID3L T8	88	0.18	328.86	1869	2	4LED15W-2L			31	0.06	115.85	1869	0.11	213.01
GOV	1385	PVT OFF	PRIVATE OFFICE	2		2	24ID3L T8	88	0.18	328.86	1869	2	4LED15W-2L			31	0.06	115.85	1869	0.11	213.01
GOV		WRR	Common Restroom	2		2	4ID1L T8	30	0.06	224.22	3737	2	4LED15W-1L			15	0.03	112.11	3737	0.03	112.11
GOV		WRR	Common Restroom	1		1	RCFL1X32	32	0.03	119.58	3737	1	LEDPLP1X12			12	0.01	44.84	3737	0.02	74.74
GOV		MRR	Common Restroom	2		2	4ID1L T8	30	0.06	224.22	3737	2	4LED15W-1L			15	0.03	112.11	3737	0.03	112.11
GOV		MRR	Common Restroom	1		1	RCFL1X32	32	0.03	119.58	3737	1	LEDPLP1X12			12	0.01	44.84	3737	0.02	74.74
GOV		LAB	General Work Area	2		2	24ID3L T8	88	0.18	328.86	1869	2	4LED15W-2L			31	0.06	115.85	1869	0.11	213.01
GOV		HALLWAY	Common Areas & Hallways	16		16	24ID2L T8	58	0.93	3467.94	3737	16	4LED13W-2L			26	0.42	1554.59	3737	0.51	1913.34
GOV		HALLWAY	EMERGENCY LIGHTING	2		2	RLED	3	0.01	22.42	3737	0	DNR			0	0.01	22.42	3737	0.00	0.00
GOV	1063	ENTRY	General Work Area	3		3	24ID3L T8	88	0.26	493.28	1869	3	4LED15W-2L			31	0.09	173.77	1869	0.17	319.51
GOV	1063	ENTRY	EMERGENCY LIGHTING	1		1	RLED	3	0.00	5.61	1869	0	DNR			0	0.00	5.61	1869	0.00	0.00
GOV	1063	ENTRY INTERVIER RM	General Work Area	2		2	24ID3L T8	88	0.18	328.86	1869	2	4LED15W-2L			31	0.06	115.85	1869	0.11	213.01
GOV	1065	HR GEN WK AREA	General Work Area	11		11	24ID3L T8	88	0.97	3617.42	3737	11	4LED15W-2L			31	0.34	1274.32	3737	0.63	2343.10
GOV	1065	HR GEN WK AREA	EMERGENCY LIGHTING	1		1	RLED	3	0.00	11.21	3737	0	DNR			0	0.00	11.21	3737	0.00	0.00
GOV	1054	HR STORAGE	Storage Room	1		1	24TP2L T8	59	0.06	220.48	3737	1	4LED15W-2L			31	0.03	115.85	3737	0.03	104.64
GOV	1055	HR FILES	Storage Room	4		4	24ID3L T8	88	0.35	657.71	1869	4	4LED13W-2L			26	0.10	194.32	1869	0.25	463.39
GOV	1056	HR CONF	Storage Room	6		6	24ID3L T8	88	0.53	986.57	1869	6	4LED13W-2L			26	0.16	291.49	1869	0.37	695.08
GOV	1057	PRVT OFF	PRIVATE OFFICE	2		2	24ID3L T8	88	0.18	657.71	3737	2	4LED15W-2L			31	0.06	231.69	3737	0.11	426.02
GOV	1058	PRVT OFF	PRIVATE OFFICE	2		2	24ID3L T8	88	0.18	657.71	3737	2	4LED15W-2L			31	0.06	231.69	3737	0.11	426.02
GOV	1059	PRVT OFF	PRIVATE OFFICE	2		2	24ID3L T8	88	0.18	657.71	3737	2	4LED15W-2L			31	0.06	231.69	3737	0.11	426.02
GOV	1060	PRVT OFF	PRIVATE OFFICE	3		3	24ID3L T8	88	0.26	986.57	3737	3	4LED15W-2L			31	0.09	347.54	3737	0.17	639.03
GOV	1061	WK RM	General Work Area	2		2	24ID3L T8	88	0.18	328.86	1869	2	4LED15W-2L			31	0.06	115.85	1869	0.11	213.01
GOV	1070	JC	Janitors Closet	1		1	24TP2L T8	59	0.06	220.48	3737	1	4LED15W-2L			31	0.03	115.85	3737	0.03	104.64
GOV	1071	ENTRY RECEPT	General Work Area	2		2	24ID3L T8	88	0.18	328.86	1869	2	4LED15W-2L			31	0.06	115.85	1869	0.11	213.01
GOV		GEN WK AREA	General Work Area	21		21	24ID3L T8	88	1.85	3452.99	1869	21	4LED15W-2L			31	0.65	1216.39	1869	1.20	2236.59
GOV		GEN WK AREA	EMERGENCY LIGHTING	3		3	RLED	3	0.01	33.63	3737	0	DNR			0	0.01	33.63	3737	0.00	0.00
GOV	1084	PRVT OFF	PRIVATE OFFICE	2		2	24ID3L T8	88	0.18	657.71	3737	2	4LED15W-2L			31	0.06	231.69	3737	0.11	426.02
GOV	1083	PRVT OFF	PRIVATE OFFICE	2		2	24ID3L T8	88	0.18	657.71	3737	2	4LED15W-2L			31	0.06	231.69	3737	0.11	426.02
GOV	1082	PRVT OFF	PRIVATE OFFICE	2		2	24ID3L T8	88	0.18	657.71	3737	2	4LED15W-2L			31	0.06	231.69	3737	0.11	426.02
GOV	1081	PRVT OFF	PRIVATE OFFICE	2		2	24ID3L T8	88	0.18	657.71	3737	2	4LED15W-2L			31	0.06	231.69	3737	0.11	426.02
GOV	1080	PRVT OFF	PRIVATE OFFICE	2		2	24ID3L T8	88	0.18	657.71	3737	2	4LED15W-2L			31	0.06	231.69	3737	0.11	426.02
GOV	1079	FILE RM	General Work Area	3		3	24ID3L T8	88	0.26	986.57	3737	3	4LED15W-2L			31	0.09	347.54	3737	0.17	639.03
GOV	1078	CONF RM	Conference & Meeting Rooms	3		3	24ID3L T8	88	0.26	986.57	3737	3	4LED15W-2L			31	0.09	347.54	3737	0.17	639.03
GOV	1077	PRVT OFF	PRIVATE OFFICE	3		3	24ID3L T8	88	0.26	986.57	3737	3	4LED15W-2L			31	0.09	347.54	3737	0.17	639.03
GOV	1076	PRVT OFF	PRIVATE OFFICE	2		2	24ID3L T8	88	0.18	657.71	3737	2	4LED15W-2L			31	0.06	231.69	3737	0.11	426.02
GOV	1075	PRVT OFF	PRIVATE OFFICE	2		2	24ID3L T8	88	0.18	657.71	3737	2	4LED15W-2L			31	0.06	231.69	3737	0.11	426.02
GOV	1089	PRVT OFF	PRIVATE OFFICE	2		2	24ID3L T8	88	0.18	657.71	3737	2	4LED15W-2L			31	0.06	231.69	3737	0.11	426.02
GOV	1088	PRVT OFF	PRIVATE OFFICE	2		2	24ID3L T8	88	0.18	657.71	3737	2	4LED15W-2L			31	0.06	231.69	3737	0.11	426.02
GOV	1087	PRVT OFF	PRIVATE OFFICE	2		2	24ID3L T8	88	0.18	657.71	3737	2	4LED15W-2L			31	0.06	231.69	3737	0.11	426.02
GOV	1086	WK RM	General Work Area	2		2	24ID3L T8	88	0.18	657.71	3737	2	4LED15W-2L			31	0.06	231.69	3737	0.11	426.02
GOV	1074	PRVT OFF	PRIVATE OFFICE	2		2	24ID3L T8	88	0.18	657.71	3737	2	4LED15W-2L			31	0.06	231.69	3737	0.11	426.02
GOV	1073	FILE RM	General Work Area	2		2	24ID3L T8	88	0.18	657.71	3737	2	4LED15W-2L			31	0.06	231.69	3737	0.11	426.02
GOV	1120	TAX ASSES ENTRY	General Work Area	12		12	24ID3L T8	88	1.06	3946.27	3737	12	4LED15W-2L			31	0.37	1390.16	3737	0.68	2556.11
GOV	1120	TAX ASSES ENTRY	General Work Area	20		20	SQ CFL1X32	32	0.64	2391.68	3737	20	LEDPL1X10			10	0.20	747.40	3737	0.44	1644.28
GOV		HALLWAY BY 1118	General Work Area	1		1	24ID3L T8	88	0.09	328.86	3737	1	4LED15W-2L			31	0.03	115.85	3737	0.06	213.01
GOV		HALLWAY BY 1118	EMERGENCY LIGHTING	1		1	RLED	3	0.00	11.21	3737	0	DNR			0	0.00	11.21	3737	0.00	0.00
GOV		PRIVATE OFF	PRIVATE OFFICE	2		2	24ID3L T8	88	0.18	328.86	1869	2	4LED15W-2L			31	0.06	115.85	1869	0.11	213.01
GOV		OPEN OFFICE AREA	General Work Area	22		22	24ID3L T8	88	1.94	7234.83	3737	22	4LED15W-2L			31	0.68	2548.63	3737	1.25	4686.20
GOV	1105	VAULT	General Work Area	2		2	24ID3L T8	88	0.18	328.86	1869	2	4LED15W-2L			31	0.06	115.85	1869	0.11	213.01

GOV	1107	PVT OFF	PRIVATE OFFICE	2		2	24ID3L T8	88	0.18	328.86	1869	2	4LED15W-2L			31	0.06	115.85	1869	0.11	213.01
GOV	1108	PVT OFF	PRIVATE OFFICE	2		2	24ID3L T8	88	0.18	328.86	1869	2	4LED15W-2L			31	0.06	115.85	1869	0.11	213.01
GOV	1109	PVT OFF	PRIVATE OFFICE	2		2	24ID3L T8	88	0.18	328.86	1869	2	4LED15W-2L			31	0.06	115.85	1869	0.11	213.01
GOV		FILE RM	PRIVATE OFFICE	2		2	24ID3L T8	88	0.18	328.86	1869	2	4LED15W-2L			31	0.06	115.85	1869	0.11	213.01
GOV		WRR	General Work Area	2		2	4ID1L T8	30	0.06	224.22	3737	2	4LED18W-1L			18	0.04	134.53	3737	0.02	89.69
GOV		WRR	General Work Area	1		1	RCFL1X32	32	0.03	119.58	3737	1	LEDPLP1X12			12	0.01	44.84	3737	0.02	74.74
GOV	1113	CONF RM	Conference & Meeting Rooms	3		3	24ID3L T8	88	0.26	493.28	1869	3	4LED15W-2L			31	0.09	173.77	1869	0.17	319.51
GOV	1114	PVT OFF	PRIVATE OFFICE	2		2	24ID3L T8	88	0.18	328.86	1869	2	4LED15W-2L			31	0.06	115.85	1869	0.11	213.01
GOV	1115	PVT OFF	PRIVATE OFFICE	2		2	24ID3L T8	88	0.18	328.86	1869	2	4LED15W-2L			31	0.06	115.85	1869	0.11	213.01
GOV	1115	FILE RM	PRIVATE OFFICE	4		4	24ID3L T8	88	0.35	657.71	1869	4	4LED15W-2L			31	0.12	231.69	1869	0.23	426.02
GOV	1094	GEN WK AREA	General Work Area	16		16	24ID3L T8	88	1.41	5261.70	3737	16	4LED15W-2L			31	0.50	1853.55	3737	0.91	3408.14
GOV	1094	GEN WK AREA	EMERGENCY LIGHTING	2		2	RLED	3	0.01	22.42	3737	0	DNR			0	0.01	22.42	3737	0.00	0.00
GOV	1100	PVT OFF	PRIVATE OFFICE	2		2	24ID3L T8	88	0.18	328.86	1869	3	4LED15W-2L			31	0.09	173.77	1869	0.08	155.09
GOV	1099	PVT OFF	PRIVATE OFFICE	3		3	24ID3L T8	88	0.26	493.28	1869	3	4LED15W-2L			31	0.09	173.77	1869	0.17	319.51
GOV	1098	PVT OFF*	PRIVATE OFFICE	3		3	24ID3L T8	88	0.26	493.28	1869	3	4LED15W-2L			31	0.09	173.77	1869	0.17	319.51
GOV	1097	CONF RM	Conference & Meeting Rooms	4		4	24ID3L T8	88	0.35	657.71	1869	4	4LED15W-2L			31	0.12	231.69	1869	0.23	426.02
GOV	1096	SECURED FILES	Storage Room	2		2	24ID3L T8	88	0.18	328.86	1869	2	4LED13W-2L			26	0.05	97.16	1869	0.12	231.69
GOV		BREAK AREA	Break & Loung Areas	14		14	24ID3L T8	88	1.23	2301.99	1869	14	4LED13W-2L			26	0.36	680.13	1869	0.87	1621.86
GOV		BREAK AREA	EMERGENCY LIGHTING	2		2	RLED	3	0.01	11.21	1869	0	DNR			0	0.01	11.21	1869	0.00	0.00
GOV	1053	BREAK AREA STOR	Break & Loung Areas	1		1	24TP3L T8	88	0.09	328.86	3737	1	4LED15W-2L 24W			31	0.03	115.85	3737	0.06	213.01
GOV		RR ENTRY	Common Areas & Hallways	2		2	RCFL1X32	32	0.06	239.17	3737	2	LEDPLP1X12			12	0.02	89.69	3737	0.04	149.48
GOV		BREAK MRR	Common Restroom	6		6	4ID1L T8	30	0.18	672.66	3737	6	4LED15W-1L			15	0.09	336.33	3737	0.09	336.33
GOV		BREAK MRR	Common Restroom	4		4	RCFL1X32	32	0.13	478.34	3737	4	LEDPLP1X12			12	0.05	179.38	3737	0.08	298.96
GOV		BREAK MRR	Common Restroom	6		6	WWCFL2X9	23	0.14	515.71	3737	6	LEDPL2X9			18	0.11	403.60	3737	0.03	112.11
GOV		BREAK WRR	Common Restroom	6		6	4ID1L T8	30	0.18	672.66	3737	6	4LED15W-1L			15	0.09	336.33	3737	0.09	336.33
GOV		BREAK WRR	Common Restroom	4		4	RCFL1X32	32	0.13	478.34	3737	4	LEDPLP1X12			12	0.05	179.38	3737	0.08	298.96
GOV		BREAK WRR	Common Restroom	6		6	WWCFL2X9	23	0.14	515.71	3737	6	LEDPL2X9			18	0.11	403.60	3737	0.03	112.11
GOV		CLOSET UNDER STAIRS	Mechanical/Electrical Room	2		2	4S2L T8	59	0.12	440.97	3737	2	4LED13W-2L	1	SW-CTDN	26	0.05	136.03	2616	0.07	304.94
GOV		VOTING OFF	General Work Area	17		17	24ID3L T8	88	1.50	5590.55	3737	17	4LED15W-2L			31	0.53	1969.40	3737	0.97	3621.15
GOV		VOTING OFF	EMERGENCY LIGHTING	3		3	RLED	3	0.01	33.63	3737	0	DNR			0	0.01	33.63	3737	0.00	0.00
GOV	1048	BREAK AREA	General Work Area	1		1	24ID3L T8	88	0.09	164.43	1869	1	4LED15W-2L			31	0.03	57.92	1869	0.06	106.50
GOV		FILE RM	Storage Room	4		4	24TP2L T8	59	0.24	440.97	1869	4	4LED15W-2L			31	0.12	231.69	1869	0.11	209.27
GOV	1047	PVT OFF	PRIVATE OFFICE	3		3	24ID3L T8	88	0.26	493.28	1869	3	4LED15W-2L			31	0.09	173.77	1869	0.17	319.51
GOV		SERVICE HALL	Common Areas & Hallways	17		17	24TP3L T8	88	1.50	5590.55	3737	17	4LED15W-2L 24W			31	0.53	1969.40	3737	0.97	3621.15
GOV		SERVICE HALL	EMERGENCY LIGHTING	6		6	RLED	3	0.02	67.27	3737	0	DNR			0	0.02	67.27	3737	0.00	0.00
GOV	1240	WORK RM	General Work Area	3		3	24TP3L T8	88	0.26	493.28	1869	3	4LED18W-2L 24W			37	0.11	207.40	1869	0.15	285.88
GOV	1239	WORK RM	General Work Area	3		3	24TP3L T8	88	0.26	493.28	1869	3	4LED18W-2L 24W			37	0.11	207.40	1869	0.15	285.88
GOV	1235	WORK RM	General Work Area	8		8	4S2L T8	59	0.47	1763.86	3737	8	4LED13W-2L			26	0.21	777.30	3737	0.26	986.57
GOV	1235	MAIL RM	General Work Area	8		8	24TP3L T8	88	0.70	1315.42	1869	8	4LED18W-2L 24W			37	0.30	553.08	1869	0.41	762.35
GOV	1235	MAIL RM OFF	General Work Area	2		2	24TP3L T8	88	0.18	328.86	1869	2	4LED18W-2L 24W			37	0.07	138.27	1869	0.10	190.59
GOV	142	DATA ROOM	Mechanical/Electrical Room	2		2	4S2L T8	59	0.12	440.97	3737	2	4LED13W-2L	1	SW-CTDN	26	0.05	136.03	2616	0.07	304.94
GOV	141	ELEC ROOM	Mechanical/Electrical Room	2		2	4S2L T8	59	0.12	440.97	3737	2	4LED13W-2L	1	SW-CTDN	26	0.05	136.03	2616	0.07	304.94
GOV	1234	PVT OFF	PRIVATE OFFICE	2		2	24TP3L T8	88	0.18	328.86	1869	2	4LED18W-2L 24W			37	0.07	138.27	1869	0.10	190.59
GOV	1233	PVT OFF	PRIVATE OFFICE	2		2	24TP3L T8	88	0.18	328.86	1869	2	4LED18W-2L 24W			37	0.07	138.27	1869	0.10	190.59
GOV	1232	PVT OFF	PRIVATE OFFICE	2		2	24TP3L T8	88	0.18	328.86	1869	2	4LED18W-2L 24W			37	0.07	138.27	1869	0.10	190.59
GOV	1226	MECH RM	General Work Area	14		14	4S2L T8	59	0.83	3086.76	3737	14	4LED13W-2L			26	0.36	1360.27	3737	0.46	1726.49
GOV	152	MECH RM	General Work Area	8		8	4S2L T8	59	0.47	1763.86	3737	8	4LED13W-2L			26	0.21	777.30	3737	0.26	986.57
GOV	151	MECH RM	General Work Area	8		8	4S2L T8	59	0.47	1763.86	3737	8	4LED13W-2L			26	0.21	777.30	3737	0.26	986.57
GOV		DOCK AREA	General Work Area	3		3	4W3L T8	88	0.26	986.57	3737	3	4LED13W-3L			40	0.12	448.44	3737	0.14	538.13
GOV		DOCK AREA	EMERGENCY LIGHTING	1		1	RLED	3	0.00	11.21	3737	0	DNR			0	0.00	11.21	3737	0.00	0.00
GOV		PARKING SOUTH	Exterior Lighting - Area	12		12	POLE SB MH-400	453	5.44	20314.33	3737	12	NF SBLED-160W			161	1.93	7219.88	3737	3.50	13094.45
GOV		PARKING SOUTHEAST	Exterior Lighting - Area	7		7	POLE SB MH-400	453	3.17	11850.03	3737	7	NF SBLED-160W			161	1.13	4211.60	3737	2.04	7638.43
GOV		PARKING WEST	Exterior Lighting - Area	4		4	POLE SB MH-400	453	1.81	6771.44	3737	4	NF SBLED-160W			161	0.64	2406.63	3737	1.17	4364.82
GOV		MIDDLE CT. YD	Exterior Lighting - Area	4		4	YM LED-40W	40	0.16	597.92	3737	0	DNR			0	0.16	597.92	3737	0.00	0.00
GOV			Exterior Lighting - Area	8		8	REC LED-14W	14	0.11	418.54	3737	0	DNR			0	0.11	418.54	3737	0.00	0.00
GOV			Exterior Lighting - Area	10		10	POLE SPD MH-175	208	2.08	7772.96	3737	10	NF SPDLED-58W			59	0.59	2204.83	3737	1.49	5568.13
GOV		FRONT OF BLDG	Exterior Lighting - Area	6		6	GW MH-100	124	0.74	2780.33	3737	6	NF GWLED-22W			23	0.14	515.71	3737	0.61	2264.62
GOV		FRONT CANOPY	Exterior Lighting - Area	10		10	RMH-175	208	2.08	7772.96	3737	10	LEDP38-30W			30	0.30	1121.10	3737	1.78	6651.86
GOV		FRONT EMER EXITS	Exterior Lighting - Area	1		1	WP CFL-42	42	0.04	156.95	3737	1	NF WPLED20W			20	0.02	74.74	3737	0.02	82.21
GOV		SE PARKING	Exterior Lighting - Area	6		6	POLE SPD MH-175	208	1.25	4663.78	3737	6	NF SPDLED-58W			59	0.35	1322.90	3737	0.89	3340.88
GOV		SW PARKING	Exterior Lighting - Area	5		5	POLE SPD MH-175	208	1.04	3886.48	3737	5	NF SPDLED-58W			59	0.30	1102.42	3737	0.75	2784.07
GOV		FRONT	Exterior Lighting - Area	4		4	POLE SPD MH-175	208	0.83	3109.18	3737	4	NF SPDLED-58W			59	0.24	881.93	3737	0.60	2227.25
GOV		BACK NE	Exterior Lighting - Area	5		5	POLE SPD MH-175	208	1.04	3886.48	3737	5	NF SPDLED-58W			59	0.30	1102.42	3737	0.75	2784.07
GOV			Exterior Lighting - Area	4		4	POLE SB MH-400	453	1.81	6771.44	3737	4	NF SBLED-160W			161	0.64	2406.63	3737	1.17	4364.82
GOV		BACK DRIVE	Exterior Lighting - Area	10		10	POLE SB MH-400	453	4.53	16928.61	3737	10	NF SBLED-160W			161	1.61	6016.57	3737	2.92	10912.04
GOV		BACK NORTH	Exterior Lighting - Area	14		14	POLE SB MH-400	453	6.34	23700.05	3737	14	NF SBLED-160W			161	2.25	8423.20	3737	4.09	15276.86
GOV		DOCK AREA	Exterior Lighting - Area	4		4	WP MH-250	288	1.15	4305.02	3737	4	NF WPLED60W			61	0.24	911.83	3737	0.91	3393.20
GOV		DOCK AREA	Exterior Lighting - Area	1		1	POLE SB MH-400	453	0.45	1692.86	3737	1	NF SBLED-160W			161	0.16	601.66	3737	0.29	1091.20
GOV		BACK NORTHWEST	Exterior Lighting - Area	4		4	POLE SB MH-400	453	1.81	6771.44	3737	4	NF SBLED-160W			161	0.64	2406.63	3737	1.17	4364.82
GOV		CANOPY NE	Exterior Lighting - Area	6		6	RMH-100	124	0.74	2780.33	3737	6	LEDP38-17W			17	0.10	381.17	3737	0.64	2399.15
GOV		ENTRY CANOPY	Exterior Lighting - Area	4		4	RCFL1X42	42	0.17	627.82	3737	4	CCK-22W			22	0.09	328.86	3737	0.08	298.96
GOV		SALLY PORT	Exterior Lighting - Area	4		4	4VP3L T8	88	0.35	1315.42	3737	4	4LED13W-3L			40	0.16	597.92	3737	0.19	717.50
GOV		BACK DOCK	Exterior Lighting - Area	1		1	WP MH-250	288	0.29	1076.26	3737	1	NF WPLED60W			61	0.06	227.96	3737	0.23	848.30
GOV		WALKWAY WEST	Exterior Lighting - Area	5		5	POLE SPD MH-175	208	1.04	3886.48	3737	5	NF SPDLED-58W			59	0.30	1102.42	3737	0.75	2784.07

GOV		CANOPY W	Exterior Lighting - Area	4		4	RMH-100	124	0.50	1853.55	3737	4	LEDP38-17W			17	0.07	254.12	3737	0.43	1599.44
GOV		ENTRY CANOPY	Exterior Lighting - Area	2		2	RCFL-32	32	0.06	239.17	3737	2	LEDP38-12W			12	0.02	89.69	3737	0.04	149.48
GOV		EXIT POLES	Exterior Lighting - Area	2		2	POLE SB MH-175	208	0.42	1554.59	3737	2	NF SBLED-80W			81	0.16	605.39	3737	0.25	949.20
GOV		EMERGENCY EXITS	Exterior Lighting - Area	1		1	WP CFL-42	42	0.04	156.95	3737	1	NF WPLED20W			20	0.02	74.74	3737	0.02	82.21
CH		MIDDLE COMMON	Common Areas & Hallways	8		8	WM CFL-11	11	0.09	328.86	3737	8	LEDA-4W			4	0.03	119.58	3737	0.06	209.27
CH		ELEV LOBBY	Common Areas & Hallways	2		2	PM CFL-11	11	0.02	82.21	3737	2	LEDA-4W			4	0.01	29.90	3737	0.01	52.32
CH		RR LOBBY	Common Areas & Hallways	2		2	PM CFL-11	11	0.02	82.21	3737	2	LEDA-4W			4	0.01	29.90	3737	0.01	52.32
CH		ENTRY TO WRR	Common Areas & Hallways	2		2	PM CFL-11	11	0.02	82.21	3737	2	LEDA-4W			4	0.01	29.90	3737	0.01	52.32
CH		AREA EXITS	EMERGENCY LIGHTING	1		1	RLED	3	0.00	11.21	3737	0	DNR			0	0.00	11.21	3737	0.00	0.00
CH	304A	PVT OFF	PRIVATE OFFICE	6		6	4W2L T8	59	0.35	1322.90	3737	6	4LED13W-2L			26	0.16	582.97	3737	0.20	739.93
CH			PRIVATE OFFICE	2		2	PM CFL-11	11	0.02	82.21	3737	2	LEDA-4W			4	0.01	29.90	3737	0.01	52.32
CH	304	PVT OFF	PRIVATE OFFICE	6		6	4W2L T8	59	0.35	1322.90	3737	6	4LED13W-2L			26	0.16	582.97	3737	0.20	739.93
CH			PRIVATE OFFICE	2		2	PM CFL-11	11	0.02	82.21	3737	2	LEDA-4W			4	0.01	29.90	3737	0.01	52.32
CH		FIRE ESCAPE	Common Areas & Hallways	1		1	22PB2U T8	55	0.06	205.54	3737	1	2LED10W-2L 22W			20	0.02	74.74	3737	0.04	130.80
CH	303	PVT OFF	PRIVATE OFFICE	7		7	4W2L T8	59	0.41	1543.38	3737	7	4LED13W-2L			26	0.18	680.13	3737	0.23	863.25
CH			PRIVATE OFFICE	2		2	PM CFL-11	11	0.02	82.21	3737	2	LEDA-4W			4	0.01	29.90	3737	0.01	52.32
CH		MRR	Common Areas & Hallways	2		2	4S2L T8	59	0.12	440.97	3737	2	4LED13W-2L			26	0.05	194.32	3737	0.07	246.64
CH			Common Areas & Hallways	2		2	PM CFL-11	11	0.02	82.21	3737	2	LEDA-4W			4	0.01	29.90	3737	0.01	52.32
CH		MRR	Common Areas & Hallways	2		2	4S2L T8	59	0.12	440.97	3737	2	4LED13W-2L			26	0.05	194.32	3737	0.07	246.64
CH			Common Areas & Hallways	2		2	PM CFL-11	11	0.02	82.21	3737	2	LEDA-4W			4	0.01	29.90	3737	0.01	52.32
CH	302	STORAGE RM	Storage Room	4		4	4EC2L T8	58	0.23	866.98	3737	2	NF4RNDLED26W			27	0.05	201.80	3737	0.18	665.19
CH	301	CT ROOM	Court Room Area	24		24	22PB2U T8	55	1.32	4932.84	3737	24	2LED10W-2L 22W			20	0.48	1793.76	3737	0.84	3139.08
CH		CT ROOM STORAGE	Storage Room	4		4	4EC2L T8	58	0.23	866.98	3737	3	NF4RNDLED26W			27	0.08	302.70	3737	0.15	564.29
CH	300	JUDGE RECEPT.	General Work Area	8		8	4EC2L T8	58	0.46	1733.97	3737	4	NF4RNDLED26W			27	0.11	403.60	3737	0.36	1330.37
CH		OFFICE RIGHT	PRIVATE OFFICE	8		8	4EC2L T8	58	0.46	1733.97	3737	6	NF4RNDLED26W			27	0.16	605.39	3737	0.30	1128.57
CH			PRIVATE OFFICE	3		3	22TP2U T8	55	0.17	616.61	3737	3	2LED10W-2L 22W			20	0.06	224.22	3737	0.11	392.39
CH		OFF LEFT	PRIVATE OFFICE	4		4	4EC2L T8	58	0.23	866.98	3737	3	NF4RNDLED26W			27	0.08	302.70	3737	0.15	564.29
CH			PRIVATE OFFICE	3		3	22TP2U T8	55	0.17	616.61	3737	3	2LED10W-2L 22W			20	0.06	224.22	3737	0.11	392.39
CH		JC HALLWAY	Common Areas & Hallways	1		1	2W2L T8	33	0.03	123.32	3737	1	2LED10W-2L			20	0.02	74.74	3737	0.01	48.58
CH		UPSTAIRS ATTIC	Storage Room	24		24	4S2L T8	59	1.42	5291.59	3737	24	4LED13W-2L			26	0.62	2331.89	3737	0.79	2959.70
CH		ELEV	STAIRS AND ELEVATORS	3		3	4S1L	43	0.13	482.07	3737	3	4LED13W-1L			13	0.04	145.74	3737	0.09	336.33
CH		STAIRS DOWN	Common Areas & Hallways	3		3	WM CFL-11	11	0.03	123.32	3737	3	LEDA-4W			4	0.01	44.84	3737	0.02	78.48
CH		CENTER LOBBY	Common Areas & Hallways	8		8	WM CFL-11	11	0.09	328.86	3737	8	LEDA-4W			4	0.03	119.58	3737	0.06	209.27
CH		ELEV LOBBY	Common Areas & Hallways	2		2	PM CFL-11	11	0.02	82.21	3737	2	LEDA-4W			4	0.01	29.90	3737	0.01	52.32
CH		RR LOBBY	Common Areas & Hallways	2		2	PM CFL-11	11	0.02	82.21	3737	2	LEDA-4W			4	0.01	29.90	3737	0.01	52.32
CH		RR ENTRY	Common Areas & Hallways	1		1	2ID2L T8	33	0.03	123.32	3737	1	2LED10W-2L			20	0.02	74.74	3737	0.01	48.58
CH		FIRE ESCAPE	Common Areas & Hallways	2		2	2ID2L T8	33	0.07	246.64	3737	2	2LED10W-2L			20	0.04	149.48	3737	0.03	97.16
CH	200	ENTRY OFF	General Work Area	8		8	4EC2L T8	58	0.46	1733.97	3737	6	NF4RNDLED26W			27	0.16	605.39	3737	0.30	1128.57
CH		PVT OFF RIGHT	PRIVATE OFFICE	8		8	4EC2L T8	58	0.46	1733.97	3737	6	NF4RNDLED26W			27	0.16	605.39	3737	0.30	1128.57
CH			PRIVATE OFFICE	3		3	22TP2U T8	55	0.17	616.61	3737	3	2LED10W-2L 22W			20	0.06	224.22	3737	0.11	392.39
CH		PVT OFF LEFT	PRIVATE OFFICE	4		4	4EC2L T8	58	0.23	866.98	3737	3	NF4RNDLED26W			27	0.08	302.70	3737	0.15	564.29
CH			PRIVATE OFFICE	2		2	22TP2U T8	55	0.11	411.07	3737	2	2LED10W-2L 22W			20	0.04	149.48	3737	0.07	261.59
CH		JC HALL	Common Areas & Hallways	1		1	22TP2U T8	55	0.06	205.54	3737	1	2LED10W-2L 22W			20	0.02	74.74	3737	0.04	130.80
CH	203	CONF RM	Conference & Meeting Rooms	4		4	4EC2L T8	58	0.23	866.98	3737	3	NF4RNDLED26W			27	0.08	302.70	3737	0.15	564.29
CH	204	PVT OFF ENTRY	PRIVATE OFFICE	2		2	4EC2L T8	58	0.12	433.49	3737	1	NF4RNDLED26W			27	0.03	100.90	3737	0.09	332.59
CH			PRIVATE OFFICE	4		4	4EC2L T8	58	0.23	866.98	3737	2	NF4RNDLED26W			27	0.05	201.80	3737	0.18	665.19
CH	203	LOUNGE	Break & Loung Areas	8		8	4EC2L T8	58	0.46	1733.97	3737	4	NF4RNDLED26W			27	0.11	403.60	3737	0.36	1330.37
CH		MRR	Common Areas & Hallways	2		2	4S2L T8	59	0.12	440.97	3737	2	4LED13W-2L			26	0.05	194.32	3737	0.07	246.64
CH			Common Areas & Hallways	1		1	2ID2L T8	33	0.03	123.32	3737	1	2LED10W-2L			20	0.02	74.74	3737	0.01	48.58
CH		WRR	Common Areas & Hallways	2		2	4S2L T8	59	0.12	440.97	3737	2	4LED13W-2L			26	0.05	194.32	3737	0.07	246.64
CH			Common Areas & Hallways	1		1	2ID2L T8	33	0.03	123.32	3737	1	2LED10W-2L			20	0.02	74.74	3737	0.01	48.58
CH	202	ENTRY OFF	General Work Area	4		4	4EC2L T8	58	0.23	866.98	3737	2	NF4RNDLED26W			27	0.05	201.80	3737	0.18	665.19
CH		PVT OFF	PRIVATE OFFICE	4		4	4EC2L T8	58	0.23	866.98	3737	3	NF4RNDLED26W			27	0.08	302.70	3737	0.15	564.29
CH		PVT OFF	PRIVATE OFFICE	2		2	4EC2L T8	58	0.12	433.49	3737	2	NF4RNDLED26W			27	0.05	201.80	3737	0.06	231.69
CH	201	ENTRY OFF	General Work Area	2		2	4EC2L T8	58	0.12	433.49	3737	2	NF4RNDLED26W			27	0.05	201.80	3737	0.06	231.69
CH		OFF AREA	General Work Area	4		4	4EC2L T8	58	0.23	866.98	3737	3	NF4RNDLED26W			27	0.08	302.70	3737	0.15	564.29
CH		PVT OFF	PRIVATE OFFICE	4		4	22PC2U T8	55	0.22	822.14	3737	4	2LED10W-2L 22W			20	0.08	298.96	3737	0.14	523.18
CH		PVT OFF LEFT	PRIVATE OFFICE	8		8	4EC2L T8	58	0.46	1733.97	3737	6	NF4RNDLED26W			27	0.16	605.39	3737	0.30	1128.57
CH			PRIVATE OFFICE	1		1	22PC2U T8	55	0.06	205.54	3737	1	2LED10W-2L 22W			20	0.02	74.74	3737	0.04	130.80
CH		PVT OFF RIGHT	PRIVATE OFFICE	2		2	4EC2L T8	58	0.12	433.49	3737	2	NF4RNDLED26W			27	0.05	201.80	3737	0.06	231.69
CH		FLOOR EXITS	EMERGENCY LIGHTING	6		6	RLED	3	0.02	67.27	3737	0	DNR			0	0.02	67.27	3737	0.00	0.00
CH		COMMON 1ST MIDDLE	Common Areas & Hallways	8		8	WM CFL-11	11	0.09	328.86	3737	8	LEDA-4W			4	0.03	119.58	3737	0.06	209.27
CH		MUSEUM LOBBY	Common Areas & Hallways	2		2	PM CFL-11	11	0.02	82.21	3737	2	LEDA-4W			4	0.01	29.90	3737	0.01	52.32
CH		VENDING	Common Areas & Hallways	1		1	22TP2U T8	55	0.06	205.54	3737	1	2LED10W-2L 22W			20	0.02	74.74	3737	0.04	130.80
CH		ELEV LOBBY	Common Areas & Hallways	6		6	PM CFL-11	11	0.07	246.64	3737	6	LEDA-4W			4	0.02	89.69	3737	0.04	156.95
CH		RR LOBBY	Common Areas & Hallways	4	1	3	PM CFL-11	11	0.03	123.32	3737	4	LEDA-4W			4	0.02	59.79	3737	0.02	63.53
CH		MAIN ENTRY	Common Areas & Hallways	2		2	PM CFL-11	11	0.02	82.21	3737	2	LEDA-4W			4	0.01	29.90	3737	0.01	52.32
CH		AREA EXITS	EMERGENCY LIGHTING	4		4	GLED	3	0.01	44.84	3737	0	DNR			0	0.01	44.84	3737	0.00	0.00
CH		MUSEUM AREA	MUSEUM AREA	6		6	HAL-100D	100	0.60	2242.20	3737	6	LEDP38-12W			12	0.07	269.06	3737	0.53	1973.14
CH		RR ENTRY	Common Areas & Hallways	1		1	2ID2L T8	33	0.03	123.32	3737	1	2LED10W-2L			20	0.02	74.74	3737	0.01	48.58
CH		WRR	Common Areas & Hallways	2		2	2ID2L T8	33	0.07	246.64	3737	2	2LED10W-2L			20	0.04	149.48	3737	0.03	97.16
CH			Common Areas & Hallways	2		2	4S2L T8	59	0.12	440.97	3737	2	4LED13W-2L			26	0.05	194.32	3737	0.07	246.64
CH		MRR	Common Areas & Hallways	2		2	4S2L T8	59	0.12	440.97	3737	2	4LED13W-2L			26	0.05	194.32	3737	0.07	246.64
CH			Common Areas & Hallways	2		2	2ID2L T8	33	0.07	246.64	3737	2	2LED10W-2L			20	0.04	149.48	3737	0.03	97.16

CH		PVT OFF	PRIVATE OFFICE	6		6	4EC2L T8	58	0.35	1300.48	3737	4	NF4RNDLED26W			27	0.11	403.60	3737	0.24	896.88
CH		OFF AREA	General Work Area	8		8	4EC2L T8	58	0.46	1733.97	3737	6	NF4RNDLED26W			27	0.16	605.39	3737	0.30	1128.57
CH		MIDDLE WK AREA	General Work Area	3		3	22PC2U T8	55	0.17	616.61	3737	3	2LED10W-2L 22W			20	0.06	224.22	3737	0.11	392.39
CH		WK AREA	General Work Area	8		8	4EC2L T8	58	0.46	1733.97	3737	6	NF4RNDLED26W			27	0.16	605.39	3737	0.30	1128.57
CH		PVT OFF	PRIVATE OFFICE	3		3	22PC2U T8	55	0.17	616.61	3737	3	2LED10W-2L 22W			20	0.06	224.22	3737	0.11	392.39
CH		BACK OFF AREA	General Work Area	9		9	4EC2L T8	58	0.52	1950.71	3737	6	NF4RNDLED26W			27	0.16	605.39	3737	0.36	1345.32
CH		BASEMENT	Storage Room	14		14	4S2L T8	59	0.83	3086.76	3737	14	4LED13W-2L			26	0.36	1360.27	3737	0.46	1726.49
CH		CONF RM	Conference & Meeting Rooms	4		4	4EC2L T8	58	0.23	866.98	3737	3	NF4RNDLED26W			27	0.08	302.70	3737	0.15	564.29
CH			Conference & Meeting Rooms	4		4	FL-100	100	0.40	1494.80	3737	4	LEDP38-12W			12	0.05	179.38	3737	0.35	1315.42
CH		STORAGE RM	Storage Room	3		3	22PC2U T8	55	0.17	616.61	3737	3	2LED10W-2L 22W			20	0.06	224.22	3737	0.11	392.39
CH		STORAGE RM	Storage Room	3		3	4EC2L T8	58	0.17	650.24	3737	2	NF4RNDLED26W			27	0.05	201.80	3737	0.12	448.44
CH		PVT OFF BACK	PRIVATE OFFICE	6		6	4EC2L T8	58	0.35	1300.48	3737	4	NF4RNDLED26W			27	0.11	403.60	3737	0.24	896.88
CH		ENTRY N EXT		3		3	PM CFL-11	11	0.03	123.32	3737	3	LEDA-4W			4	0.01	44.84	3737	0.02	78.48
CH		ROOF LIGHTING	Exterior Lighting - Area	6		6	FL MH-400	453	2.72	10157.17	3737	6	NF FL LED-140W			141	0.85	3161.50	3737	1.87	6995.66
CH		FLAG POLES	Exterior Lighting - Area	2		2	YM LED-20	20	0.04	149.48	3737	0	DNR			0	0.04	149.48	3737	0.00	0.00
CH		PT POLES FOUNTAIN	Exterior Lighting - Area	1		1	MH-100	124	0.12	463.39	3737	1	LEDP38-17W			17	0.02	63.53	3737	0.11	399.86
CH		GROUND MOUNT FL	Exterior Lighting - Area	6		6	FL MH-400	453	2.72	10157.17	3737	6	NF FL LED-140W			141	0.85	3161.50	3737	1.87	6995.66
CH		PT POLES	Exterior Lighting - Area	8		8	POLE PT MH-175	208	1.66	6218.37	3737	8	PTLED-45W			45	0.36	1345.32	3737	1.30	4873.05
DEV		ENTRY VESTIBULE	General Work Area	1		1	22TP2U T8	55	0.06	205.54	3737	1	2LED10W-2L 22W			20	0.02	74.74	3737	0.04	130.80
DEV		ENTRY VESTIBULE	EMERGENCY LIGHTING	1		1	RLED	3	0.00	11.21	3737	0	DNR			0	0.00	11.21	3737	0.00	0.00
DEV		ENTRY LOBBY	General Work Area	12		12	RCFL1X23	26	0.31	582.97	1869	12	LEDPLP1X12			12	0.14	269.06	1869	0.17	313.91
DEV		ENTRY LOBBY	EMERGENCY LIGHTING	1		1	RLED	3	0.00	11.21	3737	0	DNR			0	0.00	11.21	3737	0.00	0.00
DEV		ENTRY LOBBY DESK	General Work Area	2		2	RCFL1X23	26	0.05	194.32	3737	2	LEDPLP1X12			12	0.02	89.69	3737	0.03	104.64
DEV		ENTRY OVER CLERKS	General Work Area	2		2	RCFL1X23	26	0.05	194.32	3737	2	LEDPLP1X12			12	0.02	89.69	3737	0.03	104.64
DEV		RR HALL	Common Areas & Hallways	3		3	22TP2U T8	55	0.17	616.61	3737	3	2LED10W-2L 22W			20	0.06	224.22	3737	0.11	392.39
DEV		MECH ROOM	Mechanical/Electrical Room	1		1	4S2L T8	59	0.06	220.48	3737	1	4LED13W-2L			26	0.03	97.16	3737	0.03	123.32
DEV		WRR	Common Restroom	2		2	14TP2L T8	59	0.12	440.97	3737	2	4LED13W-2L			26	0.05	194.32	3737	0.07	246.64
DEV		WRR	Common Restroom	3		3	RCFL1X18	40	0.12	448.44	3737	3	LEDPL1X9			9	0.03	100.90	3737	0.09	347.54
DEV		MRR	Common Restroom	2		2	14TP2L T8	59	0.12	440.97	3737	2	4LED13W-2L			26	0.05	194.32	3737	0.07	246.64
DEV		MRR	Common Restroom	3		3	RCFL1X18	40	0.12	448.44	3737	3	LEDPL1X9			9	0.03	100.90	3737	0.09	347.54
DEV		JC ROOM	Janitors Closet	1		1	4S2L T8	59	0.06	220.48	3737	1	4LED13W-2L			26	0.03	97.16	3737	0.03	123.32
DEV	101	CONF ROOM	Conference & Meeting Rooms	1		1	24ID3L T8	88	0.09	328.86	3737	1	4LED15W-2L			31	0.03	115.85	3737	0.06	213.01
DEV	100	GEN WK AREA	Conference & Meeting Rooms	8		8	24ID3L T8	88	0.70	1315.42	1869	8	4LED15W-2L	1	WCM-OCC	31	0.25	324.37	1308	0.46	991.05
DEV	100	GEN WK AREA	EMERGENCY LIGHTING	2		2	RLED	3	0.01	11.21	1869	0	DNR			0	0.01	11.21	1869	0.00	0.00
DEV		OVER CLERKS	General Work Area	2		2	RCFL1X18	40	0.08	298.96	3737	2	LEDPL1X9			9	0.02	67.27	3737	0.06	231.69
DEV		OVER DESK TASK	General Work Area	2		2	4W1L T8	30	0.06	224.22	3737	2	4LED13W-1L			13	0.03	97.16	3737	0.03	127.06
DEV	104	PVT OFF	PRIVATE OFFICE	2		2	24TP4L T8	115	0.23	859.51	3737	2	4LED18W-2L 24B			37	0.07	276.54	3737	0.16	582.97
DEV	104	COPY ROOM	General Work Area	4		4	24TP4L T8	115	0.46	1719.02	3737	4	4LED18W-2L 24B	1	WCM-OCC	37	0.15	387.15	2616	0.31	1331.87
DEV	104	COPY ROOM TASK	General Work Area	1		1	4UC1L T8	31	0.03	115.85	3737	1	4LED18W-1L			18	0.02	67.27	3737	0.01	48.58
DEV		REAR HALL	Common Areas & Hallways	17		17	22TP3F17	47	0.80	2985.86	3737	17	2LED10W-3L	3	WKM-OCC	31	0.53	1378.58	2616	0.27	1607.28
DEV		REAR HALL	EMERGENCY LIGHTING	5		5	RLED	3	0.02	56.06	3737	0	DNR			0	0.02	56.06	3737	0.00	0.00
DEV		REAR HALL	Common Areas & Hallways	4		4	RCFL1X18	40	0.16	597.92	3737	4	LEDPL1X9			9	0.04	134.53	3737	0.12	463.39
DEV		OPEN OFFICE	General Work Area	20		20	24ID3L T8	88	1.76	6577.12	3737	20	4LED15W-2L			31	0.62	2316.94	3737	1.14	4260.18
DEV		OPEN OFFICE	General Work Area	3		3	22ID2F17	31	0.09	347.54	3737	3	2LED10W-2L			20	0.06	224.22	3737	0.03	123.32
DEV		OPEN OFFICE	EMERGENCY LIGHTING	3		3	RLED	3	0.01	33.63	3737	0	DNR			0	0.01	33.63	3737	0.00	0.00
DEV		OPEN OFFICE OVER CLERK	General Work Area	4		4	RCFL1X18	40	0.16	597.92	3737	4	LEDPL1X9			9	0.04	134.53	3737	0.12	463.39
DEV	105	PVT OFF	PRIVATE OFFICE	2		2	24TP4L T8	115	0.23	429.76	1869	2	4LED18W-2L 24B			37	0.07	138.27	1869	0.16	291.49
DEV	113	PVT OFF	PRIVATE OFFICE	2		2	24TP4L T8	115	0.23	429.76	1869	2	4LED18W-2L 24B			37	0.07	138.27	1869	0.16	291.49
DEV	114	PVT OFF	PRIVATE OFFICE	2		2	24TP4L T8	115	0.23	429.76	1869	2	4LED18W-2L 24B			37	0.07	138.27	1869	0.16	291.49
DEV		RR HALLWAY	Common Areas & Hallways	2		2	22TP3F17	47	0.09	351.28	3737	2	2LED10W-3L			31	0.06	231.69	3737	0.03	119.58
DEV		RR HALLWAY	EMERGENCY LIGHTING	1		1	RLED	3	0.00	11.21	3737	0	DNR			0	0.00	11.21	3737	0.00	0.00
DEV	125	BREAK RM	Break & Loung Areas	3		3	24TP3L T8	88	0.26	986.57	3737	3	4LED13W-2L 24W			26	0.08	291.49	3737	0.19	695.08
DEV	125	BREAK RM	EMERGENCY LIGHTING	1		1	RLED	3	0.00	11.21	3737	0	DNR			0	0.00	11.21	3737	0.00	0.00
DEV		MRR	Common Restroom	3		3	14TP2L T8	59	0.18	661.45	3737	3	4LED13W-2L			26	0.08	291.49	3737	0.10	369.96
DEV		MRR	Common Restroom	3		3	RCFL1X9	14	0.04	156.95	3737	3	LEDPL1X9			9	0.03	100.90	3737	0.02	56.06
DEV		MRR	Common Restroom	3		3	14TP2L T8	59	0.18	661.45	3737	3	4LED13W-2L			26	0.08	291.49	3737	0.10	369.96
DEV		MRR	Common Restroom	3		3	RCFL1X9	14	0.04	156.95	3737	3	LEDPL1X9			9	0.03	100.90	3737	0.02	56.06
DEV		SINK	Common Restroom	1		1	24TP3L T8	88	0.09	164.43	1869	1	4LED13W-2L 24W			26	0.03	48.58	1869	0.06	115.85
DEV		COPY ROOM	General Work Area	4		4	24TP3L T8	88	0.35	657.71	1869	4	4LED18W-2L 24W			37	0.15	276.54	1869	0.20	381.17
DEV		FILE ROOM	General Work Area	4		4	24TP3L T8	88	0.35	657.71	1869	4	4LED18W-2L 24W			37	0.15	276.54	1869	0.20	381.17
DEV		JAN CLOSET BY EXIT	Janitors Closet	2		2	4S2L T8	59	0.12	440.97	3737	2	4LED13W-2L			26	0.05	194.32	3737	0.07	246.64
DEV		MECH CLOSET BY EXIT	Mechanical/Electrical Room	2		2	4S2L T8	59	0.12	440.97	3737	2	4LED13W-2L			26	0.05	194.32	3737	0.07	246.64
DEV	123	PVT OFF	PRIVATE OFFICE	1		1	24TP3L T8	88	0.09	164.43	1869	1	4LED18W-2L 24W			37	0.04	69.13	1869	0.05	95.29
DEV	125	PVT OFF	PRIVATE OFFICE	1		1	24TP3L T8	88	0.09	164.43	1869	1	4LED18W-2L 24W			37	0.04	69.13	1869	0.05	95.29
DEV	128	PVT OFF ENTRY	PRIVATE OFFICE	2		2	24TP3L T8	88	0.18	328.86	1869	2	4LED18W-2L 24W			37	0.07	138.27	1869	0.10	190.59
DEV	127	PVT OFF	PRIVATE OFFICE	3		3	24TP3L T8	88	0.26	493.28	1869	3	4LED18W-2L 24W			37	0.11	207.40	1869	0.15	285.88
DEV	129	PVT OFF	PRIVATE OFFICE	3		3	24TP3L T8	88	0.26	493.28	1869	3	4LED18W-2L 24W			37	0.11	207.40	1869	0.15	285.88
DEV		HALLWAY BACK	Common Areas & Hallways	17		17	22TP3F17	47	0.80	1492.93	1869	17	2LED10W-3L			31	0.53	984.70	1869	0.27	508.23
DEV		HALLWAY BACK	EMERGENCY LIGHTING	5		5	RLED	3	0.02	56.06	3737	0	DNR			0	0.02	56.06	3737	0.00	0.00
DEV		HALLWAY BACK	Common Areas & Hallways	4		4	RCFL1X23	26	0.10	194.32	1869	4	LEDPLP1X12			12	0.05	89.69	1869	0.06	104.64
DEV		ENTRY TO TRANS	Common Areas & Hallways	1		1	22TP3F17	47	0.05	175.64	3737	1	2LED10W-3L			31	0.03	115.85	3737	0.02	59.79
DEV		ENTRY TO TRANS	EMERGENCY LIGHTING	1		1	RLED	3	0.00	11.21	3737	0	DNR			0	0.00	11.21	3737	0.00	0.00
DEV		ENTRY TO TRANS STORAGE	Common Areas & Hallways	1		1	24TP3L T8	88	0.09	328.86	3737	1	4LED13W-2L 24W			26	0.03	97.16	3737	0.06	231.69
DEV		TRANS COMMON	General Work Area	2		2	24TP3L T8	88	0.18	657.71	3737	2	4LED18W-2L 24W			37	0.07	276.54	3737	0.10	381.17

DEV		TRANS COMMON	General Work Area	8		8	RCFL1X23	26	0.21	777.30	3737	8	LEDPLP1X12			12	0.10	358.75	3737	0.11	418.54
DEV		TRANS VENDING OFF	General Work Area	3		3	24TP3L T8	88	0.26	986.57	3737	3	4LED18W-2L 24W			37	0.11	414.81	3737	0.15	571.76
DEV		TRANS CORNER OFF	PRIVATE OFFICE	2		2	24TP3L T8	88	0.18	657.71	3737	2	4LED18W-2L 24W			37	0.07	276.54	3737	0.10	381.17
DEV	107	TRANS PVT OFF	PRIVATE OFFICE	2		2	24TP3L T8	88	0.18	657.71	3737	2	4LED18W-2L 24W			37	0.07	276.54	3737	0.10	381.17
DEV	106	TRANS PVT OFF	PRIVATE OFFICE	2		2	24TP3L T8	88	0.18	657.71	3737	2	4LED18W-2L 24W			37	0.07	276.54	3737	0.10	381.17
DEV		TRANS MECH RM	Mechanical/Electrical Room	2		2	4S2L T8	59	0.12	440.97	3737	2	4LED13W-2L			26	0.05	194.32	3737	0.07	246.64
DEV	104	TRANS PVT OFF	PRIVATE OFFICE	2		2	24TP3L T8	88	0.18	657.71	3737	2	4LED18W-2L 24W			37	0.07	276.54	3737	0.10	381.17
DEV	103	TRANS PVT OFF	PRIVATE OFFICE	2		2	24TP3L T8	88	0.18	657.71	3737	2	4LED18W-2L 24W			37	0.07	276.54	3737	0.10	381.17
DEV		TRANS STORAGE	PRIVATE OFFICE	2		2	24TP3L T8	88	0.18	657.71	3737	2	4LED18W-2L 24W			37	0.07	276.54	3737	0.10	381.17
DEV	101	TRANS PVT OFF	PRIVATE OFFICE	3		3	24TP3L T8	88	0.26	986.57	3737	3	4LED18W-2L 24W			37	0.11	414.81	3737	0.15	571.76
DEV		BREAK ROOM	Break & Loung Areas	8		8	24TP2L T8	59	0.47	1763.86	3737	8	4LED13W-2L	1	WKM-OCC	26	0.21	544.11	2616	0.26	1219.76
DEV	115	TRANS PVT OFF	PRIVATE OFFICE	2		2	24TP3L T8	88	0.18	657.71	3737	2	4LED18W-2L 24W	1	SW-OCC	37	0.07	193.58	2616	0.10	464.14
DEV		HALL	General Work Area	2		2	24TP2L T8	59	0.12	440.97	3737	2	4LED18W-2L			37	0.07	276.54	3737	0.04	164.43
DEV		HALL MRR	General Work Area	1		1	4W2L	72	0.07	269.06	3737	1	4LED13W-2L			26	0.03	97.16	3737	0.05	171.90
DEV		HALL WRR	General Work Area	1		1	4W2L	72	0.07	269.06	3737	1	4LED13W-2L			26	0.03	97.16	3737	0.05	171.90
DEV	112	TRANS PVT OFF	PRIVATE OFFICE	4		4	24TP3L T8	88	0.35	657.71	1869	4	4LED18W-2L 24W	1	SW-OCC	37	0.15	193.58	1308	0.20	464.14
DEV		MAINT. SHOP	Garage - General Work Area	31		31	24HB6L T8	226	7.01	26181.42	3737	31	4LED18W-6L			110	3.41	12743.17	3737	3.60	13438.25
DEV		MAINT. SHOP	EMERGENCY LIGHTING	2		2	RLED	3	0.01	22.42	3737	0	DNR			0	0.01	22.42	3737	0.00	0.00
DEV		MAINT. SHOP	Garage - General Work Area	1		1	FRM HPS-75	95	0.10	355.02	3737	1	NF FL LED-90W			91	0.09	340.07	3737	0.00	14.95
DEV		SHOP RR	Common Restroom	1		1	4W2L T8	59	0.06	220.48	3737	1	4LED13W-2L	1	WKM-OCC	26	0.03	68.01	2616	0.03	152.47
DEV		SHOP RR	Common Restroom	1		1	RCFL1X18	40	0.04	149.48	3737	1	LEDPL1X9			9	0.01	33.63	3737	0.03	115.85
DEV		ENTRY TO TRANS EAST	Common Restroom	2		2	RCFL-23	23	0.05	171.90	3737	2	LEDP30-9W			9	0.02	67.27	3737	0.03	104.64
DEV		ENTRY TO TRANS EAST	Exterior Lighting - Area	2		2	RCFL-23	23	0.05	171.90	3737	2	LEDP30-9W			9	0.02	67.27	3737	0.03	104.64
DEV		NE EXTERIOR	Exterior Lighting - Area	1		1	WP MH-70	91	0.09	340.07	3737	1	NF WPLED20W			20	0.02	74.74	3737	0.07	265.33
DEV		NE EXTERIOR	Exterior Lighting - Area	1		1	WP MH-250	288	0.29	1076.26	3737	1	NF WPLED60W			61	0.06	227.96	3737	0.23	848.30
DEV		NE EXTERIOR	Exterior Lighting - Area	3		3	WP MH-400	453	1.36	5078.58	3737	3	NF WPLED80W			81	0.24	908.09	3737	1.12	4170.49
DEV		NE EXTERIOR	Exterior Lighting - Area	1		1	WP MH-400	453	0.45	1692.86	3737	1	NF WPLED80W			81	0.08	302.70	3737	0.37	1390.16
DEV		NE EXTERIOR	Exterior Lighting - Area	2		2	WP MH-400	453	0.91	3385.72	3737	2	NF WPLED80W			81	0.16	605.39	3737	0.74	2780.33
DEV		NE EXTERIOR SHORT BLDG	Exterior Lighting - Area	2		2	WP MH-70	91	0.18	680.13	3737	2	NF WPLED20W			20	0.04	149.48	3737	0.14	530.65
DEV		EMPLOYEE SHACK	General Work Area	6		6	8S2L	110	0.66	2466.42	3737	6	4LED4L-18W 8CK			37	0.22	829.61	3737	0.44	1636.81
DEV		EMPLOYEE SHACK	EMERGENCY LIGHTING	2		2	RLED	3	0.01	22.42	3737	0	DNR			0	0.01	22.42	3737	0.00	0.00
DEV		EMPLOYEE SHACK PVT OFF	PRIVATE OFFICE	1		1	24TP4L T8	115	0.12	429.76	3737	1	4LED18W-2L 24B			37	0.04	138.27	3737	0.08	291.49
DEV		EMPLOYEE SHACK MID PVT OF	PRIVATE OFFICE	1		1	24TP4L T8	115	0.12	429.76	3737	1	4LED18W-2L 24B			37	0.04	138.27	3737	0.08	291.49
DEV		EMPLOYEE SHACK MID PVT OF	PRIVATE OFFICE	1		1	24TP4L T8	115	0.12	429.76	3737	1	4LED18W-2L 24B			37	0.04	138.27	3737	0.08	291.49
DEV		EMPLOYEE SHACK RR	PRIVATE OFFICE	1		1	24TP4L T8	115	0.12	429.76	3737	1	4LED18W-2L 24B			37	0.04	138.27	3737	0.08	291.49
DEV		SHACK EXT	Exterior Lighting - Area	2		2	CF11/1-SCRW	11	0.02	82.21	3737	2	LEDA-4W			4	0.01	29.90	3737	0.01	52.32
HEA		ENTRY LOBBY	Common Areas & Hallways	3		3	LB MH-100	124	0.37	1390.16	3737	3	NF LB LED-80W			81	0.24	908.09	3737	0.13	482.07
HEA		ENTRY LOBBY	Common Areas & Hallways	4		4	LB MH-100	124	0.50	1853.55	3737	4	NF LB LED-80W			81	0.32	1210.79	3737	0.17	642.76
HEA		ENTRY LOBBY	Common Areas & Hallways	3		3	WW CFL2X9	23	0.07	257.85	3737	3	LEDPL2X9			18	0.05	201.80	3737	0.02	56.06
HEA		HALL TO NORTH	Common Areas & Hallways	6		6	RND CFL-42	42	0.25	941.72	3737	6	NF LBLED-20W			21	0.13	470.86	3737	0.13	470.86
HEA		HALL TO NORTH	Common Areas & Hallways	4		4	RND MH-100	124	0.50	1853.55	3737	4	NF LBLED-20W			21	0.08	313.91	3737	0.41	1539.64
HEA		HALL TO NORTH	Common Areas & Hallways	3		3	22PB2U T8 28W	55	0.17	616.61	3737	3	2LED10W-2L 22W			20	0.06	224.22	3737	0.11	392.39
HEA		OVER RECEPT	General Work Area	8		8	RCFL2X18	40	0.32	1195.84	3737	8	LEDPL2X9			18	0.14	538.13	3737	0.18	657.71
HEA		OVER RECEPT	General Work Area	4		4	24PB3L T8	88	0.35	1315.42	3737	4	4LED18W-2L 24W			37	0.15	553.08	3737	0.20	762.35
HEA		OVER RECEPT	General Work Area	4		4	22PB2U T8	55	0.22	822.14	3737	4	2LED10W-2L 22W			20	0.08	298.96	3737	0.14	523.18
HEA		FRONT OFF	PRIVATE OFFICE	2		2	24TP3L T8	88	0.18	657.71	3737	2	4LED18W-2L 24W			37	0.07	276.54	3737	0.10	381.17
HEA		BREAK RM	Break & Loung Areas	2		2	24TP3L T8	88	0.18	657.71	3737	2	4LED13W-2L 24W			26	0.05	194.32	3737	0.12	463.39
HEA		CONF RM	Conference & Meeting Rooms	2		2	24PB3L T8	88	0.18	657.71	3737	2	4LED18W-2L 24W			37	0.07	276.54	3737	0.10	381.17
HEA		CONF RM	Conference & Meeting Rooms	6		6	RHAL-100	100	0.60	2242.20	3737	6	LEDP38-12W			12	0.07	269.06	3737	0.53	1973.14
HEA		DIR OFF	PRIVATE OFFICE	2		2	24TP3L T8	88	0.18	657.71	3737	2	4LED18W-2L 24W			37	0.07	276.54	3737	0.10	381.17
HEA		DIR OFF CLOSET	Storage Room	1		1	14TP2L T8	59	0.06	220.48	3737	1	4LED13W-2L			26	0.03	97.16	3737	0.03	123.32
HEA		COORDINATOR OFF	PRIVATE OFFICE	2		2	24TP3L T8	88	0.18	657.71	3737	2	4LED18W-2L 24W			37	0.07	276.54	3737	0.10	381.17
HEA		COORDIN OFF CLOSET	PRIVATE OFFICE	1		1	14TP2L T8	59	0.06	220.48	3737	1	4LED13W-2L			26	0.03	97.16	3737	0.03	123.32
HEA		PVT OFF	PRIVATE OFFICE	2		2	24TP3L T8	88	0.18	657.71	3737	2	4LED18W-2L 24W			37	0.07	276.54	3737	0.10	381.17
HEA		STORAGE HALL	Common Areas & Hallways	1		1	4IH2L T8	59	0.06	220.48	3737	1	4LED13W-2L			26	0.03	97.16	3737	0.03	123.32
HEA		JC HALL	Janitors Closet	1		1	4IH2L T8	59	0.06	220.48	3737	1	4LED13W-2L			26	0.03	97.16	3737	0.03	123.32
HEA		PM MANAGER PVT OFF	PRIVATE OFFICE	2		2	24TP3L T8	88	0.18	657.71	3737	2	4LED18W-2L 24W			37	0.07	276.54	3737	0.10	381.17
HEA		SUPPLY HALL	Storage Room	1		1	4IH2L T8	59	0.06	220.48	3737	1	4LED13W-2L			26	0.03	97.16	3737	0.03	123.32
HEA		INVENTORY PVT OFF	PRIVATE OFFICE	2		2	24TP3L T8	88	0.18	657.71	3737	2	4LED18W-2L 24W			37	0.07	276.54	3737	0.10	381.17
HEA		FILE RM	General Work Area	2		2	24TP3L T8	88	0.18	657.71	3737	2	4LED18W-2L 24W			37	0.07	276.54	3737	0.10	381.17
HEA		LAB	General Work Area	3		3	24TP3L T8	88	0.26	986.57	3737	3	4LED18W-2L 24W			37	0.11	414.81	3737	0.15	571.76
HEA		LAB UC	General Work Area	2		2	4W1L T8	30	0.06	224.22	3737	2	4LED13W-1L			13	0.03	97.16	3737	0.03	127.06
HEA		LAB STORAGE	Storage Room	1		1	24TP3L T8	88	0.09	328.86	3737	1	4LED13W-2L 24W			26	0.03	97.16	3737	0.06	231.69
HEA		OPEN AREA	General Work Area	9		9	24TP3L T8	88	0.79	2959.70	3737	9	4LED18W-2L 24W			37	0.33	1244.42	3737	0.46	1715.28
HEA		OPEN AREA	General Work Area	2		2	22TP3F17	47	0.09	351.28	3737	2	2LED10W-3L			31	0.06	231.69	3737	0.03	119.58
HEA		OPEN AREA	General Work Area	1		1	24PB3L T8	88	0.09	328.86	3737	1	4LED18W-2L 24W			37	0.04	138.27	3737	0.05	190.59
HEA		HEARING EXAM RM	EXAM ROOM	1		1	24TP3L T8	88	0.09	328.86	3737	1	4LED18W-2L 24W			37	0.04	138.27	3737	0.05	190.59
HEA		RR BY HEARING EXAM	EXAM ROOM	1		1	14TP2L T8	59	0.06	220.48	3737	1	4LED13W-2L			26	0.03	97.16	3737	0.03	123.32
HEA		EXAM RM	EXAM ROOM	2		2	22TP3F17	47	0.09	351.28	3737	2	2LED10W-3L			31	0.06	231.69	3737	0.03	119.58
HEA		ULTRA SOUND EXAM RM	EXAM ROOM	2		2	24PB3L T8	88	0.18	657.71	3737	2	4LED18W-2L 24W			37	0.07	276.54	3737	0.10	381.17
HEA	7	ULTRA SOUND EXAM RM	EXAM ROOM	1		1	24PB3L T8	88	0.09	328.86	3737	1	4LED18W-2L 24W			37	0.04	138.27	3737	0.05	190.59
HEA	7	ULTRA SOUND EXAM RM	EXAM ROOM	1		1	4W1L T8	30	0.03	112.11	3737	1	4LED13W-1L			13	0.01	48.58	3737	0.02	63.53
HEA	6	ULTRA SOUND EXAM RM	EXAM ROOM	1		1	24TP3L T8	88	0.09	328.86	3737	1	4LED18W-2L 24W			37	0.04	138.27	3737	0.05	190.59
HEA	6	ULTRA SOUND EXAM RM	EXAM ROOM	1		1	4W1L T8	30	0.03	112.11	3737	1	4LED13W-1L			13	0.01	48.58	3737	0.02	63.53

HEA	5	ULTRA SOUND EXAM RM	EXAM ROOM	1		1	24TP3L T8	88	0.09	328.86	3737	1	4LED18W-2L 24W			37	0.04	138.27	3737	0.05	190.59
HEA	5	ULTRA SOUND EXAM RM	EXAM ROOM	1		1	4W1L T8	30	0.03	112.11	3737	1	4LED13W-1L			13	0.01	48.58	3737	0.02	63.53
HEA	4	ULTRA SOUND EXAM RM	EXAM ROOM	1		1	24TP3L T8	88	0.09	328.86	3737	1	4LED18W-2L 24W			37	0.04	138.27	3737	0.05	190.59
HEA	4	ULTRA SOUND EXAM RM	EXAM ROOM	1		1	4W1L T8	30	0.03	112.11	3737	1	4LED13W-1L			13	0.01	48.58	3737	0.02	63.53
HEA		STORAGE RM	General Work Area	1		1	24TP3L T8	88	0.09	328.86	3737	1	4LED18W-2L 24W			37	0.04	138.27	3737	0.05	190.59
HEA	3	EXAM RM	EXAM ROOM	2		2	24TP3L T8	88	0.18	657.71	3737	2	4LED18W-2L 24W			37	0.07	276.54	3737	0.10	381.17
HEA	2	EXAM RM	EXAM ROOM	1		1	24TP3L T8	88	0.09	328.86	3737	1	4LED18W-2L 24W			37	0.04	138.27	3737	0.05	190.59
HEA	2	PROCEED RM	EXAM ROOM	1		1	24PB3L T8	88	0.09	328.86	3737	1	4LED18W-2L 24W			37	0.04	138.27	3737	0.05	190.59
HEA	1	EXAM RM	EXAM ROOM	1		1	24TP3L T8	88	0.09	328.86	3737	1	4LED18W-2L 24W			37	0.04	138.27	3737	0.05	190.59
HEA	1	PVT OFF	PRIVATE OFFICE	2		2	24TP3L T8	88	0.18	657.71	3737	2	4LED18W-2L 24W			37	0.07	276.54	3737	0.10	381.17
HEA		RR AREA	General Work Area	1		1	14TP2L T8	59	0.06	220.48	3737	1	4LED13W-2L			26	0.03	97.16	3737	0.03	123.32
HEA	2	LAB AREA	General Work Area	2		2	24PB3L T8	88	0.18	657.71	3737	2	4LED18W-2L 24W			37	0.07	276.54	3737	0.10	381.17
HEA	2	LAB AREA UC	General Work Area	1		1	4S1L T8	30	0.03	112.11	3737	1	4LED13W-1L			13	0.01	48.58	3737	0.02	63.53
HEA	1	PROVIDER OFF	PRIVATE OFFICE	1		1	24TP3L T8	88	0.09	328.86	3737	1	4LED18W-2L 24W			37	0.04	138.27	3737	0.05	190.59
HEA		LOBBY SOUTH	Common Areas & Hallways	1		1	LB MH-100	124	0.12	463.39	3737	1	NF LB LED-80W			81	0.08	302.70	3737	0.04	160.69
HEA		LOBBY SOUTH	EMERGENCY LIGHTING	1		1	RLED	3	0.00	11.21	3737	0	DNR			0	0.00	11.21	3737	0.00	0.00
HEA		HALLWAY	Common Areas & Hallways	1		1	24PB3L T8	88	0.09	328.86	3737	1	4LED13W-2L 24W			26	0.03	97.16	3737	0.06	231.69
HEA		HALLWAY	Common Areas & Hallways	1		1	22PB2U T8	55	0.06	205.54	3737	1	2LED10W-2L 22W			20	0.02	74.74	3737	0.04	130.80
HEA		HALLWAY	EMERGENCY LIGHTING	1		1	RLED	3	0.00	11.21	3737	0	DNR			0	0.00	11.21	3737	0.00	0.00
HEA		RECEPT OFF	Common Areas & Hallways	2		2	24PB3L T8	88	0.18	657.71	3737	2	4LED13W-2L 24W			26	0.05	194.32	3737	0.12	463.39
HEA		RECEPT OFF	Common Areas & Hallways	1		1	4W1L T8	30	0.03	112.11	3737	1	4LED13W-1L			13	0.01	48.58	3737	0.02	63.53
HEA		LAB	Common Areas & Hallways	2		2	24PB3L T8	88	0.18	657.71	3737	2	4LED13W-2L 24W			26	0.05	194.32	3737	0.12	463.39
HEA		LAB UC	Common Areas & Hallways	1		1	4W1L T8	30	0.03	112.11	3737	1	4LED13W-1L			13	0.01	48.58	3737	0.02	63.53
HEA		RR	Common Restroom	1		1	24TP3L T8	88	0.09	328.86	3737	1	4LED13W-2L 24W			26	0.03	97.16	3737	0.06	231.69
HEA		PVT OFF	PRIVATE OFFICE	1		1	24TP3L T8	88	0.09	328.86	3737	1	4LED18W-2L 24W			37	0.04	138.27	3737	0.05	190.59
HEA		PVT OFF LAB	PRIVATE OFFICE	1		1	24TP3L T8	88	0.09	328.86	3737	1	4LED18W-2L 24W			37	0.04	138.27	3737	0.05	190.59
HEA		PVT OFF LAB	PRIVATE OFFICE	1		1	4W1L T8	30	0.03	112.11	3737	1	4LED13W-1L			13	0.01	48.58	3737	0.02	63.53
HEA		PVT OFF	PRIVATE OFFICE	1		1	24PB3L T8	88	0.09	328.86	3737	1	4LED18W-2L 24W			37	0.04	138.27	3737	0.05	190.59
HEA		PVT OFF	PRIVATE OFFICE	1		1	24TP3L T8	88	0.09	328.86	3737	1	4LED18W-2L 24W			37	0.04	138.27	3737	0.05	190.59
HEA		PVT OFF	PRIVATE OFFICE	1		1	24TP3L T8	88	0.09	328.86	3737	1	4LED18W-2L 24W			37	0.04	138.27	3737	0.05	190.59
HEA		OFF EXITS	EMERGENCY LIGHTING	4		4	RLED	3	0.01	44.84	3737	0	DNR			0	0.01	44.84	3737	0.00	0.00
HEA		EXT SOFFIT	Exterior Lighting - Area	22		22	RMH-100	124	2.73	10194.54	3737	22	LEDP38-17W			17	0.37	1397.64	3737	2.35	8796.90
HEA		EXT FRONT	Exterior Lighting - Area	2		2	GM FL MH-250	288	0.58	2152.51	3737	2	NF FL LED-90W			91	0.18	680.13	3737	0.39	1472.38
HEA		WALL PACKS	Exterior Lighting - Area	3		3	WP HPS-100	138	0.41	1547.12	3737	3	NF WPLED20W			20	0.06	224.22	3737	0.35	1322.90
HEA		PARKING	Exterior Lighting - Area	6		6	POLE SB MH-250	288	1.73	6457.54	3737	6	NF SBLED-100W			101	0.61	2264.62	3737	1.12	4192.91
PC4		CISD HALL	Common Areas & Hallways	2		2	24PB3L T8	88	0.18	657.71	3737	2	4LED18W-2L 24W			37	0.07	276.54	3737	0.10	381.17
PC4		CISD PVT OFF	PRIVATE OFFICE	2		2	24PB3L T8	88	0.18	657.71	3737	2	4LED18W-2L 24W			37	0.07	276.54	3737	0.10	381.17
PC4		CISD RR	Common Areas & Hallways	1		1	24TP2L T8	59	0.06	220.48	3737	1	4LED13W-2L			26	0.03	97.16	3737	0.03	123.32
PC4		CISD PVT OFF	PRIVATE OFFICE	2		2	24PB3L T8	88	0.18	657.71	3737	2	4LED18W-2L 24W			37	0.07	276.54	3737	0.10	381.17
PC4		MAIN ENTRY	Common Areas & Hallways	9		9	RCFL1X32	32	0.29	1076.26	3737	9	LEDPLP1X12			12	0.11	403.60	3737	0.18	672.66
PC4			Common Areas & Hallways	4		4	RCFL-23	23	0.09	343.80	3737	4	LEDPLP1X12			12	0.05	179.38	3737	0.04	164.43
PC4			Common Areas & Hallways	4		4	RCFL1X32	32	0.13	478.34	3737	4	LEDPLP1X12			12	0.05	179.38	3737	0.08	298.96
PC4			EMERGENCY LIGHTING	4		4	RLED	3	0.01	44.84	3737	0	DNR			0	0.01	44.84	3737	0.00	0.00
PC4		HALL BY TAX OFF	General Work Area	2		2	CF11/1-SCRW	11	0.02	82.21	3737	2	LEDA-4W			4	0.01	29.90	3737	0.01	52.32
PC4			General Work Area	6		6	22PB2U T8	55	0.33	1233.21	3737	6	2LED10W-2L 22W			20	0.12	448.44	3737	0.21	784.77
PC4		TAX OFFICE AREA	General Work Area	3		3	24PB3L T8	88	0.26	986.57	3737	3	4LED18W-2L 24W			37	0.11	414.81	3737	0.15	571.76
PC4		OFFICE STORAGE	Storage Room	1		1	24TP2L T8	59	0.06	220.48	3737	1	4LED13W-2L			26	0.03	97.16	3737	0.03	123.32
PC4		SHERRIFF OFFICE	General Work Area	4		4	24PB3L T8	88	0.35	1315.42	3737	4	4LED18W-2L 24W			37	0.15	553.08	3737	0.20	762.35
PC4		OFFICE STORAGE	Storage Room	1		1	24TP3L T8	88	0.09	328.86	3737	1	4LED13W-2L 24W			26	0.03	97.16	3737	0.06	231.69
PC4		OFFICE STORAGE	Storage Room	1		1	24TP3L T8	88	0.09	328.86	3737	1	4LED13W-2L 24W			26	0.03	97.16	3737	0.06	231.69
PC4		WRR	Common Restroom	1		1	22TP2U T8	55	0.06	205.54	3737	1	2LED10W-2L 22W			20	0.02	74.74	3737	0.04	130.80
PC4		MRR	Common Restroom	1		1	22TP2U T8	55	0.06	205.54	3737	1	2LED10W-2L 22W			20	0.02	74.74	3737	0.04	130.80
PC4		BREAK RM	Break & Loung Areas	2		2	24PB3L T8	88	0.18	657.71	3737	2	4LED18W-2L 24W			37	0.07	276.54	3737	0.10	381.17
PC4		CONSTIBLE	General Work Area	4		4	24PB3L T8	88	0.35	1315.42	3737	4	4LED18W-2L 24W			37	0.15	553.08	3737	0.20	762.35
PC4		PVT OFFICE	PRIVATE OFFICE	3		3	24PB3L T8	88	0.26	986.57	3737	3	4LED18W-2L 24W			37	0.11	414.81	3737	0.15	571.76
PC4		COURT ROOM AREA	Court Room Area	8		8	RCFL1X32	32	0.26	956.67	3737	8	LEDPLP1X12			12	0.10	358.75	3737	0.16	597.92
PC4			Court Room Area	6		6	4W1L T8	30	0.18	672.66	3737	6	4LED15W-1L			15	0.09	336.33	3737	0.09	336.33
PC4			EMERGENCY LIGHTING	2		2	RLED	3	0.01	22.42	3737	0	DNR			0	0.01	22.42	3737	0.00	0.00
PC4		JOP HALLWAY	Common Areas & Hallways	2		2	RCFL1X32	32	0.06	239.17	3737	2	LEDPLP1X12			12	0.02	89.69	3737	0.04	149.48
PC4			Common Areas & Hallways	5		5	22PB2U T8	55	0.28	1027.68	3737	5	2LED10W-2L 22W			20	0.10	373.70	3737	0.18	653.98
PC4		RECEPT AREA	General Work Area	6		6	24PB3L T8	88	0.53	1973.14	3737	6	4LED18W-2L 24W			37	0.22	829.61	3737	0.31	1143.52
PC4		PVT OFFICE	PRIVATE OFFICE	2		2	24PB3L T8	88	0.18	657.71	3737	2	4LED18W-2L 24W			37	0.07	276.54	3737	0.10	381.17
PC4		CONFERENCE RM	Conference & Meeting Rooms	2		2	24PB3L T8	88	0.18	657.71	3737	2	4LED18W-2L 24W			37	0.07	276.54	3737	0.10	381.17
PC4		ADULT PROBATION OFFICE	General Work Area	1		1	24PB3L T8	88	0.09	328.86	3737	1	4LED18W-2L 24W			37	0.04	138.27	3737	0.05	190.59
PC4		ELECT ROOM	Mechanical/Electrical Room	1		1	4S2L T8	59	0.06	220.48	3737	1	4LED13W-2L			26	0.03	97.16	3737	0.03	123.32
PC4		WRR	Common Restroom	1		1	24TP2L T8	59	0.06	220.48	3737	1	4LED13W-2L			26	0.03	97.16	3737	0.03	123.32
PC4		MRR	Common Restroom	1		1	24TP2L T8	59	0.06	220.48	3737	1	4LED13W-2L			26	0.03	97.16	3737	0.03	123.32
PC4		JC	Janitors Closet	1		1	22TP2U T8	55	0.06	205.54	3737	1	2LED10W-2L 22W			20	0.02	74.74	3737	0.04	130.80
PC4		COMMISIONER OFFICE	PRIVATE OFFICE	2		2	24PB3L T8	88	0.18	657.71	3737	2	4LED18W-2L 24W			37	0.07	276.54	3737	0.10	381.17
PC4		PVT OFFICE	PRIVATE OFFICE	2		2	24PB3L T8	88	0.18	657.71	3737	2	4LED18W-2L 24W			37	0.07	276.54	3737	0.10	381.17
PC4		EXTERIOR FRONT	Exterior Lighting - Area	8		8	RMH-100	124	0.99	3707.10	3737	8	LEDP38-17W			17	0.14	508.23	3737	0.86	3198.87
PC4			Exterior Lighting - Area	2		2	WP CFL-42	42	0.08	313.91	3737	2	NF WPLED20W			20	0.04	149.48	3737	0.04	164.43
PC4			Exterior Lighting - Area	2		2	WP CFL-42	42	0.08	313.91	3737	2	NF WPLED20W			20	0.04	149.48	3737	0.04	164.43
PC4		EXT SOUTH	Exterior Lighting - Area	1		1	WP CFL-42	42	0.04	156.95	3737	1	NF WPLED20W			20	0.02	74.74	3737	0.02	82.21

PC4		EXT EAST	Exterior Lighting - Area	1		1	WP CFL-42	42	0.04	156.95	3737	1	NF WPLED20W			20	0.02	74.74	3737	0.02	82.21
PC4		PARKING LOT	Exterior Lighting - Area	5		5	POLE MH-400	453	2.27	8464.31	3737	5	NF SBLED-160W			161	0.81	3008.29	3737	1.46	5456.02
PC4		EXT NORTH	Exterior Lighting - Area	3		3	WP CFL-42	42	0.13	470.86	3737	3	NF WPLED20W			20	0.06	224.22	3737	0.07	246.64
JAIL																					
JAIL																					
JAIL																					
JAIL																					
JAIL																					
JAIL																					
JAIL																					
JAIL																					
JAIL																					
JAIL																					
JAIL																					
JAIL																					
JAIL																					
JAIL																					
JAIL																					
JAIL																					
JAIL																					
JAIL																					
JAIL																					
JAIL																					
JAIL																					
JAIL																					
JAIL																					
JAIL																					
JAIL																					
JAIL																					
JAIL																					
JAIL																					
JAIL																					
JAIL																					
JAIL																					
JAIL																					
JAIL																					
JAIL																					
JAIL																					
JAIL																					
JAIL																					
JAIL																					
JAIL																					
JAIL																					
JAIL																					
JAIL																					
JAIL																					
JAIL																					
JAIL																					
JAIL																					
JAIL																					
JAIL																					
JAIL																					
JAIL																					
JAIL																					
JAIL																					
JAIL																					
JAIL																					
JAIL																					
JAIL																					
JAIL																					
JAIL																					
				5335		5312			404.55	1503424.34		5170		32			156.96	570189.06		247.59	933235.28

UCRM-2 Power Conditioning

Building	Measure	Annual kW Savings	Annual kWh Savings	Demand Savings	Energy Savings	Total Cost Savings
GC	Harmonic Reduction	144	104,875	$494	$8,102	$8,597
GC	PF Correction	29	21,481	$101	$1,660	$1,761
JD	Harmonic Reduction	28	20,390	$126	$1,560	$1,686
JD	PF Correction	5	4,013	$25	$307	$332
Jail	Harmonic Reduction	68	49,548	$233	$3,828	$4,061
Jail	PF Correction	8	5,620	$26	$434	$461
TOTAL ALL BUILDINGS		282	205,928	$1,006	$15,891	$16,897
TOTAL AFTER SAFETY FACTOR		**254**	**185,335**	**$905**	**$14,302**	**$15,207**

Electric Rate for GC & Jail

Season	Cost per kW	Cost per kWh
Year Around	$3.44	$0.07726

Electric Rate for JD

Season	Cost per kW	Cost per kWh
Year Around	$4.50	$0.07650

Electric Rate

Season	Cost per kW	Cost per kWh
Year Around	$0.00	$0.08786

Electric Rate for CH & HD

Season	Cost per kW	Cost per kWh
Year Around	$3.61	$0.07726

Electric Rate for P2

Season	Cost per kW	Cost per kWh
Year Around	$3.38	$0.06893

Electric Rate for DS, P4 & JW

Season	Cost per kW	Cost per kWh
Year Around	$0.00	$0.08109

Savings Safety Factor: 90%

Power Factor Savings Analysis

Hays County Energy Savings Project

PF Correction Energy Savings Calculation Equation from Con Edison & Power Studies

Annual kWh Savings = (Average kW) x (System Loss Percentage) x (1 - Original PF ^{2} /new PF ^{2}) x 8760 ho

Government Center

Average kW =	760	
Original PF =	87%	
Projected PF =	95%	
System Loss =	2%	(Typical range 2% to 5%)

Annual kWh Savings =	**21,481**

Juvenile Detention

Average kW =	161	
Original PF =	88%	
Projected PF =	95%	
System Loss =	2%	(Typical range 2% to 5%)

Annual kWh Savings =	**4,013**

Jail

Average kW =	226	
Original PF =	88%	
Projected PF =	95%	
System Loss =	2%	(Typical range 2% to 5%)

Annual kWh Savings =	**5,620**

UCRM 3: ERS Demand Response

ERCOT ERS Program

Building	Generators	kW Rating	kW Reduction Available	Projected ERS Revenue per Year*
GC	1 Stewart Stevenson	750	338	$15,188
JD	1 Generac	125	88	$3,938
Jail	1 Catepilar	600	150	$6,750
DS	1 Catepilar	100	35	$1,575
Totals		**1,475**	**575**	**$27,450**

* Estimated annual revenue for ERS program at $45,000 per year per megawatt capacity.

UCRM-4 Retro Commissioning

Building	Measure	Annual kW Savings	Annual kWh Savings	Demand Savings	Energy Savings	Total Cost Savings
GC	Retro Commissioning	410	598,239	$1,410	$46,219	$47,628
CH				$0	$0	$0
JD				$0	$0	$0
DS				$0	$0	$0
HD				$0	$0	$0
P2				$0	$0	$0
P4				$0	$0	$0
JW				$0	$0	$0
Jail				$0	$0	$0
TOTAL ALL BUILDINGS		410	598,239	$1,410	$46,219	$47,628
TOTAL AFTER SAFETY FACTOR		**328**	**478,591**	**$1,128**	**$36,975**	**$38,103**

Electric Rate for GC & Jail

Season	Cost per kW	Cost per kWh
Year Around	$3.44	$0.077258

Electric Rate for JD

Season	Cost per kW	Cost per kWh
Year Around	$4.50	$0.07650

Electric Rate

Season	Cost per kW	Cost per kWh
Year Around	$0.00	$0.08786

Electric Rate for CH & HD

Season	Cost per kW	Cost per kWh
Year Around	$3.61	$0.07726

Electric Rate for P2

Season	Cost per kW	Cost per kWh
Year Around	$3.38	$0.06893

Electric Rate for DS, P4 & JW

Season	Cost per kW	Cost per kWh
Year Around	$0.00	$0.08109

Savings Safety Factor: 80%

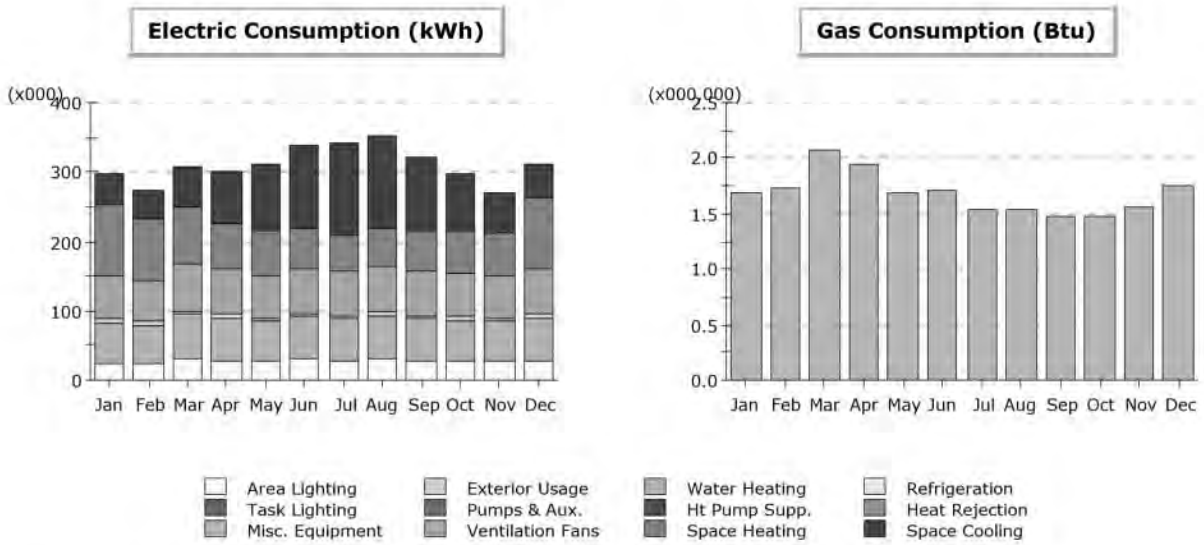

Electric Consumption (kWh x000)

	Jan	Feb	Mar	Apr	May	Jun	Jul	Aug	Sep	Oct	Nov	Dec	Total
Space Cool	42.9	41.6	60.5	78.3	96.4	119.5	133.3	134.7	106.1	79.8	55.8	47.4	996.3
Heat Reject.	-	-	-	-	-	-	-	-	-	-	-	-	-
Refrigeration	-	-	-	-	-	-	-	-	-	-	-	-	-
Space Heat	102.5	89.2	81.8	65.0	62.3	58.7	52.5	53.8	60.0	62.2	61.3	105.4	854.8
HP Supp.	-	-	-	-	-	-	-	-	-	-	-	-	-
Hot Water	-	-	-	-	-	-	-	-	-	-	-	-	-
Vent. Fans	62.0	58.0	66.1	63.3	62.4	64.7	65.2	66.3	62.9	62.5	61.7	64.3	759.3
Pumps & Aux.	0.0	0.0	0.0	0.0	-	-	-	-	-	0.0	0.0	0.0	0.1
Ext. Usage	6.5	5.2	5.8	5.6	4.6	4.5	4.6	6.5	6.3	6.5	6.3	6.5	68.8
Misc. Equip.	56.5	54.4	64.0	61.2	58.3	61.5	60.1	61.9	59.7	58.3	57.6	60.3	713.6
Task Lights	-	-	-	-	-	-	-	-	-	-	-	-	-
Area Lights	25.4	25.3	30.5	29.0	26.6	29.2	27.8	29.1	28.0	26.6	26.6	28.0	332.2
Total	295.8	273.7	308.6	302.4	310.7	338.2	343.5	352.3	323.0	295.9	269.2	311.9	3,725.1

Gas Consumption (Btu x000,000)

	Jan	Feb	Mar	Apr	May	Jun	Jul	Aug	Sep	Oct	Nov	Dec	Total
Space Cool	-	-	-	-	-	-	-	-	-	-	-	-	-
Heat Reject.	-	-	-	-	-	-	-	-	-	-	-	-	-
Refrigeration	-	-	-	-	-	-	-	-	-	-	-	-	-
Space Heat	-	-	-	-	-	-	-	-	-	-	-	-	-
HP Supp.	-	-	-	-	-	-	-	-	-	-	-	-	-
Hot Water	1.70	1.72	2.07	1.94	1.68	1.71	1.54	1.54	1.48	1.47	1.55	1.75	20.13
Vent. Fans	-	-	-	-	-	-	-	-	-	-	-	-	-
Pumps & Aux.	-	-	-	-	-	-	-	-	-	-	-	-	-
Ext. Usage	-	-	-	-	-	-	-	-	-	-	-	-	-
Misc. Equip.	-	-	-	-	-	-	-	-	-	-	-	-	-
Task Lights	-	-	-	-	-	-	-	-	-	-	-	-	-
Area Lights	-	-	-	-	-	-	-	-	-	-	-	-	-
Total	1.70	1.72	2.07	1.94	1.68	1.71	1.54	1.54	1.48	1.47	1.55	1.75	20.13

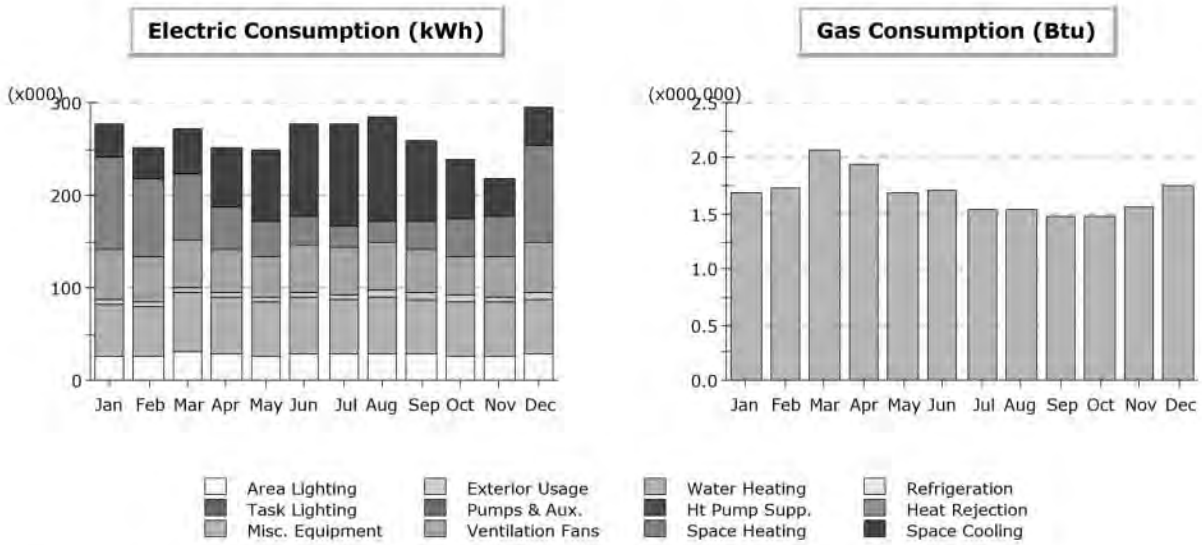

Electric Consumption (kWh x000)

	Jan	Feb	Mar	Apr	May	Jun	Jul	Aug	Sep	Oct	Nov	Dec	Total
Space Cool	35.8	34.4	48.8	62.9	76.4	99.7	110.5	111.6	85.3	62.3	40.7	40.4	808.7
Heat Reject.	-	-	-	-	-	-	-	-	-	-	-	-	-
Refrigeration	-	-	-	-	-	-	-	-	-	-	-	-	-
Space Heat	101.3	84.8	72.0	46.9	38.1	31.2	23.8	24.1	32.5	40.7	44.6	105.2	645.2
HP Supp.	-	-	-	-	-	-	-	-	-	-	-	-	-
Hot Water	-	-	-	-	-	-	-	-	-	-	-	-	-
Vent. Fans	51.8	47.2	51.0	44.9	43.7	50.1	50.3	51.1	45.9	42.9	43.2	54.0	576.1
Pumps & Aux.	0.0	0.0	0.0	0.0	-	-	-	-	-	0.0	0.0	0.0	0.1
Ext. Usage	6.5	5.2	5.8	5.6	4.6	4.5	4.6	6.5	6.3	6.5	6.3	6.5	68.8
Misc. Equip.	56.5	54.4	64.0	61.2	58.3	61.5	60.1	61.9	59.7	58.3	57.6	60.3	713.6
Task Lights	-	-	-	-	-	-	-	-	-	-	-	-	-
Area Lights	25.4	25.3	30.5	29.0	26.6	29.2	27.8	29.1	28.0	26.6	26.6	28.0	332.2
Total	277.2	251.3	271.9	250.6	247.7	276.2	277.1	284.3	257.7	237.2	218.9	294.5	3,144.7

Gas Consumption (Btu x000,000)

	Jan	Feb	Mar	Apr	May	Jun	Jul	Aug	Sep	Oct	Nov	Dec	Total
Space Cool	-	-	-	-	-	-	-	-	-	-	-	-	-
Heat Reject.	-	-	-	-	-	-	-	-	-	-	-	-	-
Refrigeration	-	-	-	-	-	-	-	-	-	-	-	-	-
Space Heat	-	-	-	-	-	-	-	-	-	-	-	-	-
HP Supp.	-	-	-	-	-	-	-	-	-	-	-	-	-
Hot Water	1.70	1.72	2.07	1.93	1.68	1.70	1.54	1.53	1.48	1.47	1.55	1.75	20.12
Vent. Fans	-	-	-	-	-	-	-	-	-	-	-	-	-
Pumps & Aux.	-	-	-	-	-	-	-	-	-	-	-	-	-
Ext. Usage	-	-	-	-	-	-	-	-	-	-	-	-	-
Misc. Equip.	-	-	-	-	-	-	-	-	-	-	-	-	-
Task Lights	-	-	-	-	-	-	-	-	-	-	-	-	-
Area Lights	-	-	-	-	-	-	-	-	-	-	-	-	-
Total	1.70	1.72	2.07	1.93	1.68	1.70	1.54	1.53	1.48	1.47	1.55	1.75	20.12

UCRM-5 Building Automation System

Building	Measure	Annual kW Savings	Annual kWh Savings	Demand Savings	Energy Savings	Total Cost Savings
GC	BAS	0		$0	$0	$0
CH	BAS	49	36,045	$178	$2,785	$2,963
JD	BAS	0		$0	$0	$0
DS	BAS	0	0	$0	$0	$0
HD	BAS	72	52,375	$259	$4,046	$4,305
P2	BAS	0	0	$0	$0	$0
P4	BAS	44	32,149	$0	$2,607	$2,607
JW	BAS	0	0	$0	$0	$0
Jail	BAS	19	14,132	$67	$1,092	$1,158
TOTAL ALL BUILDINGS		185	134,701	$504	$10,530	$11,034
TOTAL AFTER SAFETY FACTOR		**148**	**107,761**	**$403**	**$8,424**	**$8,827**

Electric Rate for Gov. Center & Jail

Season	Cost per kW	Cost per kWh
Year Around	$3.44	$0.07726

Electric Rate for Juvenile Detention

Season	Cost per kW	Cost per kWh
Year Around	$4.50	$0.07650

Electric Rate for Court House & Health Department

Season	Cost per kW	Cost per kWh
Year Around	$3.61	$0.07726

Electric Rate for Precinct 2

Season	Cost per kW	Cost per kWh
Year Around	$3.38	$0.06893

Electric Rate for Development Services, Precinct 4 & Jacobs Well

Season	Cost per kW	Cost per kWh
Year Around	$0.00	$0.08109

Savings Safety Factor: 80%

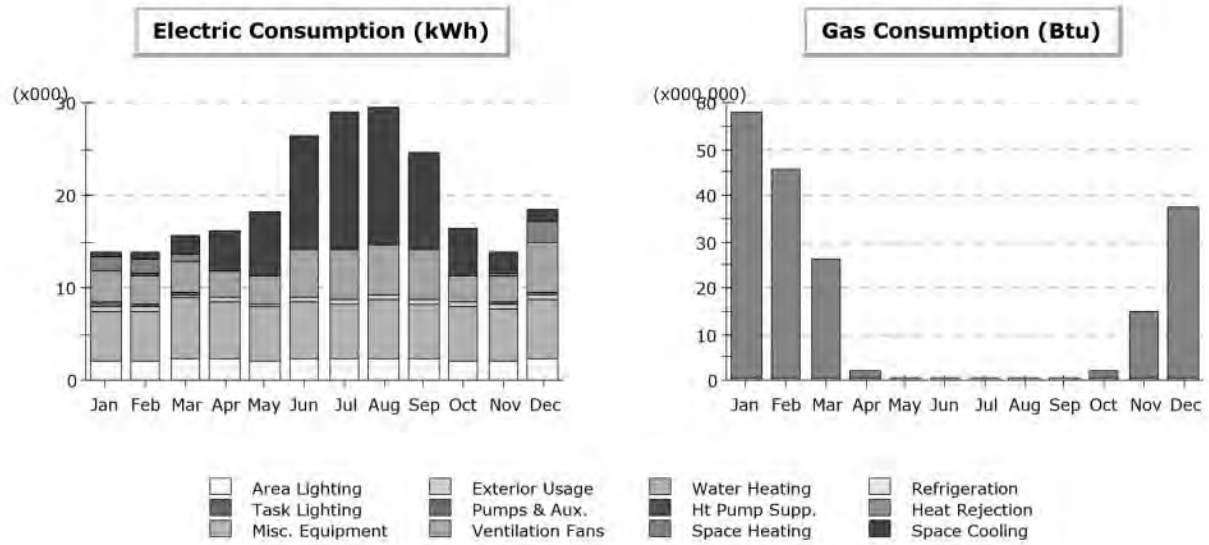

Electric Consumption (kWh x000)

	Jan	Feb	Mar	Apr	May	Jun	Jul	Aug	Sep	Oct	Nov	Dec	Total
Space Cool	0.48	0.73	2.15	4.27	6.88	12.19	14.77	14.75	10.72	5.24	2.22	1.12	75.51
Heat Reject.	-	-	-	-	-	-	-	-	-	-	-	-	-
Refrigeration	-	-	-	-	-	-	-	-	-	-	-	-	-
Space Heat	1.51	1.70	0.74	0.05	-	-	-	-	-	0.04	0.45	2.34	6.82
HP Supp.	0.11	0.15	0.05	-	-	-	-	-	-	-	0.01	0.12	0.42
Hot Water	-	-	-	-	-	-	-	-	-	-	-	-	-
Vent. Fans	3.43	3.21	3.18	2.80	3.15	5.24	5.50	5.50	5.25	2.87	2.76	5.39	48.29
Pumps & Aux.	0.36	0.28	0.17	0.01	-	-	-	-	-	0.01	0.13	0.30	1.26
Ext. Usage	0.52	0.42	0.46	0.45	0.37	0.36	0.37	0.52	0.51	0.52	0.51	0.52	5.55
Misc. Equip.	5.48	5.40	6.46	6.19	5.73	6.19	5.97	6.22	5.94	5.73	5.70	6.38	71.38
Task Lights	-	-	-	-	-	-	-	-	-	-	-	-	-
Area Lights	2.02	2.01	2.42	2.31	2.12	2.38	2.30	2.39	2.29	2.12	2.11	2.22	26.67
Total	13.91	13.89	15.63	16.07	18.25	26.36	28.91	29.38	24.70	16.53	13.89	18.38	235.91

Gas Consumption (Btu x000,000)

	Jan	Feb	Mar	Apr	May	Jun	Jul	Aug	Sep	Oct	Nov	Dec	Total
Space Cool	-	-	-	-	-	-	-	-	-	-	-	-	-
Heat Reject.	-	-	-	-	-	-	-	-	-	-	-	-	-
Refrigeration	-	-	-	-	-	-	-	-	-	-	-	-	-
Space Heat	57.08	45.19	25.58	1.33	0.02	-	-	-	-	1.48	14.51	36.94	182.13
HP Supp.	-	-	-	-	-	-	-	-	-	-	-	-	-
Hot Water	0.62	0.63	0.75	0.71	0.61	0.62	0.56	0.56	0.54	0.54	0.57	0.64	7.35
Vent. Fans	-	-	-	-	-	-	-	-	-	-	-	-	-
Pumps & Aux.	-	-	-	-	-	-	-	-	-	-	-	-	-
Ext. Usage	-	-	-	-	-	-	-	-	-	-	-	-	-
Misc. Equip.	-	-	-	-	-	-	-	-	-	-	-	-	-
Task Lights	-	-	-	-	-	-	-	-	-	-	-	-	-
Area Lights	-	-	-	-	-	-	-	-	-	-	-	-	-
Total	57.70	45.82	26.33	2.04	0.63	0.62	0.56	0.56	0.54	2.01	15.08	37.57	189.49

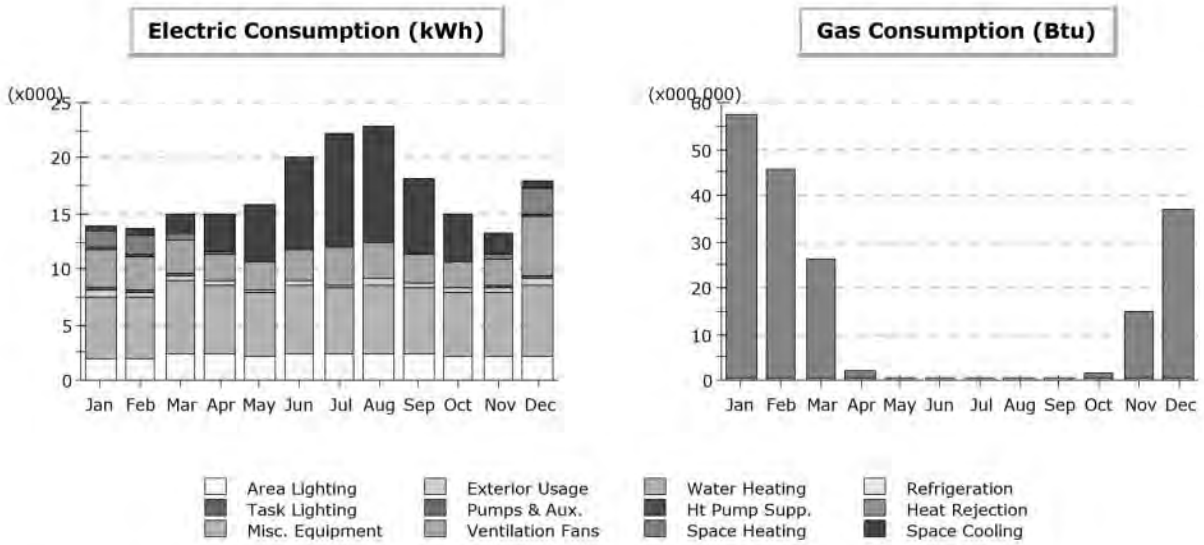

Electric Consumption (kWh x000)

	Jan	Feb	Mar	Apr	May	Jun	Jul	Aug	Sep	Oct	Nov	Dec	Total
Space Cool	0.44	0.58	1.77	3.47	5.19	8.19	10.27	10.49	6.83	4.18	1.78	0.83	54.02
Heat Reject.	-	-	-	-	-	-	-	-	-	-	-	-	-
Refrigeration	-	-	-	-	-	-	-	-	-	-	-	-	-
Space Heat	1.51	1.69	0.73	0.05	-	-	-	-	-	0.03	0.44	2.29	6.74
HP Supp.	0.11	0.15	0.05	-	-	-	-	-	-	-	0.01	0.11	0.42
Hot Water	-	-	-	-	-	-	-	-	-	-	-	-	-
Vent. Fans	3.39	3.10	2.99	2.47	2.36	2.90	3.22	3.24	2.62	2.34	2.52	5.40	36.55
Pumps & Aux.	0.36	0.28	0.17	0.01	-	-	-	-	-	0.02	0.13	0.30	1.26
Ext. Usage	0.52	0.42	0.46	0.45	0.37	0.36	0.37	0.52	0.51	0.52	0.51	0.52	5.55
Misc. Equip.	5.48	5.40	6.46	6.19	5.73	6.19	5.97	6.22	5.94	5.73	5.70	6.38	71.38
Task Lights	-	-	-	-	-	-	-	-	-	-	-	-	-
Area Lights	2.02	2.01	2.42	2.31	2.12	2.38	2.30	2.39	2.29	2.12	2.11	2.22	26.67
Total	13.83	13.62	15.05	14.94	15.77	20.02	22.13	22.86	18.19	14.94	13.19	18.05	202.59

Gas Consumption (Btu x000,000)

	Jan	Feb	Mar	Apr	May	Jun	Jul	Aug	Sep	Oct	Nov	Dec	Total
Space Cool	-	-	-	-	-	-	-	-	-	-	-	-	-
Heat Reject.	-	-	-	-	-	-	-	-	-	-	-	-	-
Refrigeration	-	-	-	-	-	-	-	-	-	-	-	-	-
Space Heat	56.92	44.76	25.19	1.21	-	-	-	-	-	1.22	14.22	36.38	179.91
HP Supp.	-	-	-	-	-	-	-	-	-	-	-	-	-
Hot Water	0.62	0.63	0.75	0.71	0.61	0.62	0.56	0.56	0.53	0.53	0.57	0.64	7.34
Vent. Fans	-	-	-	-	-	-	-	-	-	-	-	-	-
Pumps & Aux.	-	-	-	-	-	-	-	-	-	-	-	-	-
Ext. Usage	-	-	-	-	-	-	-	-	-	-	-	-	-
Misc. Equip.	-	-	-	-	-	-	-	-	-	-	-	-	-
Task Lights	-	-	-	-	-	-	-	-	-	-	-	-	-
Area Lights	-	-	-	-	-	-	-	-	-	-	-	-	-
Total	57.54	45.39	25.95	1.92	0.61	0.62	0.56	0.56	0.53	1.76	14.79	37.02	187.26

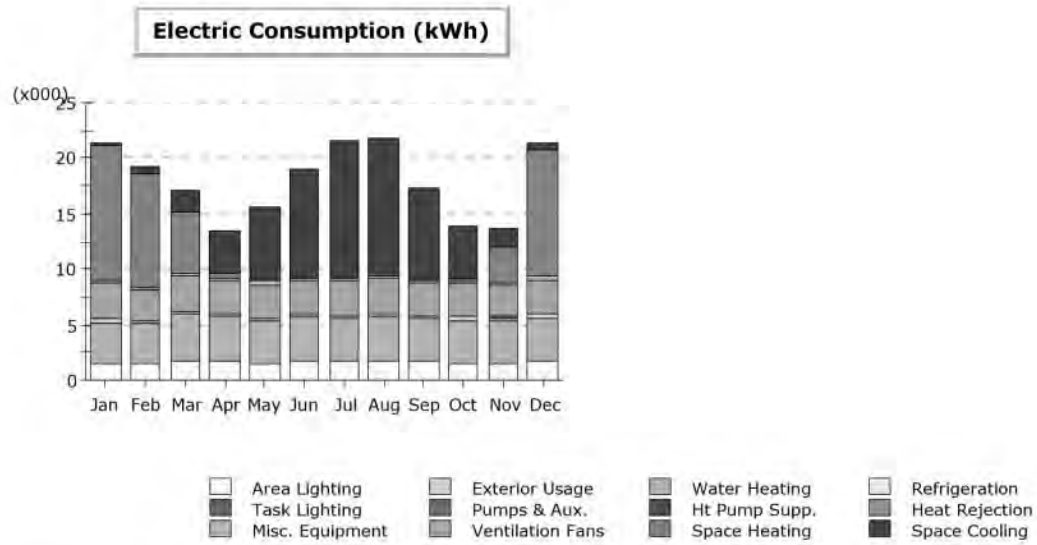

Electric Consumption (kWh x000)

	Jan	Feb	Mar	Apr	May	Jun	Jul	Aug	Sep	Oct	Nov	Dec	Total
Space Cool	0.35	0.60	1.95	3.95	6.77	9.97	12.45	12.35	8.31	4.70	1.87	0.60	63.86
Heat Reject.	-	-	-	-	-	-	-	-	-	-	-	-	-
Refrigeration	-	-	-	-	-	-	-	-	-	-	-	-	-
Space Heat	12.18	10.14	5.53	0.34	0.00	0.00	-	-	0.00	0.29	3.04	11.37	42.90
HP Supp.	-	-	-	-	-	-	-	-	-	-	-	-	-
Hot Water	0.24	0.24	0.28	0.27	0.23	0.23	0.21	0.21	0.20	0.20	0.22	0.24	2.78
Vent. Fans	3.12	2.81	3.05	2.94	3.05	2.97	3.10	3.10	2.96	3.05	2.98	3.10	36.23
Pumps & Aux.	0.09	0.08	0.05	0.00	-	-	-	-	-	0.00	0.04	0.09	0.35
Ext. Usage	0.33	0.26	0.29	0.28	0.23	0.23	0.23	0.33	0.32	0.33	0.32	0.33	3.46
Misc. Equip.	3.67	3.56	4.21	4.03	3.80	4.03	3.94	4.07	3.90	3.80	3.77	3.94	46.72
Task Lights	-	-	-	-	-	-	-	-	-	-	-	-	-
Area Lights	1.49	1.47	1.76	1.68	1.56	1.68	1.62	1.69	1.61	1.56	1.55	1.62	19.28
Total	21.47	19.15	17.11	13.50	15.64	19.11	21.55	21.75	17.30	13.92	13.77	21.30	215.58

Gas Consumption (Btu)

	Jan	Feb	Mar	Apr	May	Jun	Jul	Aug	Sep	Oct	Nov	Dec	Total
Space Cool													
Heat Reject.													
Refrigeration													
Space Heat													
HP Supp.													
Hot Water													
Vent. Fans													
Pumps & Aux.													
Ext. Usage													
Misc. Equip.													
Task Lights													
Area Lights													
Total													

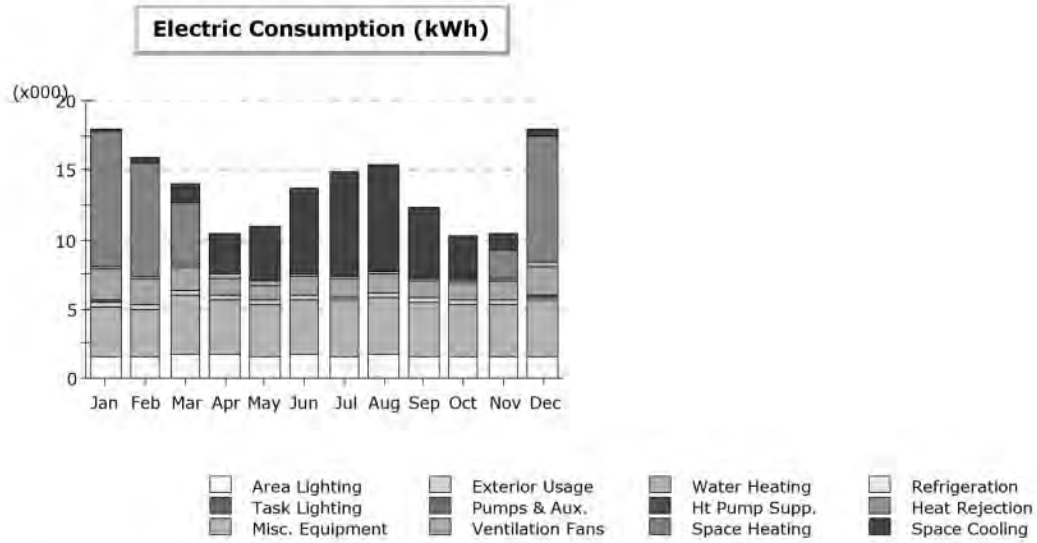

Electric Consumption (kWh x000)

	Jan	Feb	Mar	Apr	May	Jun	Jul	Aug	Sep	Oct	Nov	Dec	Total
Space Cool	0.25	0.39	1.35	2.82	4.06	6.10	7.45	7.60	5.08	3.10	1.17	0.43	39.79
Heat Reject.	-	-	-	-	-	-	-	-	-	-	-	-	-
Refrigeration	-	-	-	-	-	-	-	-	-	-	-	-	-
Space Heat	9.69	8.14	4.36	0.15	-	-	-	-	0.00	0.12	2.08	9.12	33.67
HP Supp.	-	-	-	-	-	-	-	-	-	-	-	-	-
Hot Water	0.24	0.24	0.28	0.27	0.23	0.23	0.21	0.21	0.20	0.20	0.22	0.24	2.78
Vent. Fans	2.21	1.80	1.68	1.18	1.14	1.32	1.43	1.43	1.20	1.10	1.31	2.12	17.92
Pumps & Aux.	0.09	0.08	0.05	0.00	-	-	-	-	-	0.00	0.04	0.09	0.35
Ext. Usage	0.33	0.26	0.29	0.28	0.23	0.23	0.23	0.33	0.32	0.33	0.32	0.33	3.46
Misc. Equip.	3.67	3.56	4.21	4.03	3.80	4.03	3.94	4.07	3.90	3.80	3.77	3.94	46.72
Task Lights	-	-	-	-	-	-	-	-	-	-	-	-	-
Area Lights	1.49	1.47	1.76	1.68	1.56	1.68	1.62	1.69	1.61	1.56	1.55	1.62	19.28
Total	17.96	15.93	13.98	10.42	11.02	13.60	14.88	15.33	12.31	10.22	10.44	17.89	163.97

Gas Consumption (Btu)

	Jan	Feb	Mar	Apr	May	Jun	Jul	Aug	Sep	Oct	Nov	Dec	Total
Space Cool													
Heat Reject.													
Refrigeration													
Space Heat													
HP Supp.													
Hot Water													
Vent. Fans													
Pumps & Aux.													
Ext. Usage													
Misc. Equip.													
Task Lights													
Area Lights													
Total													

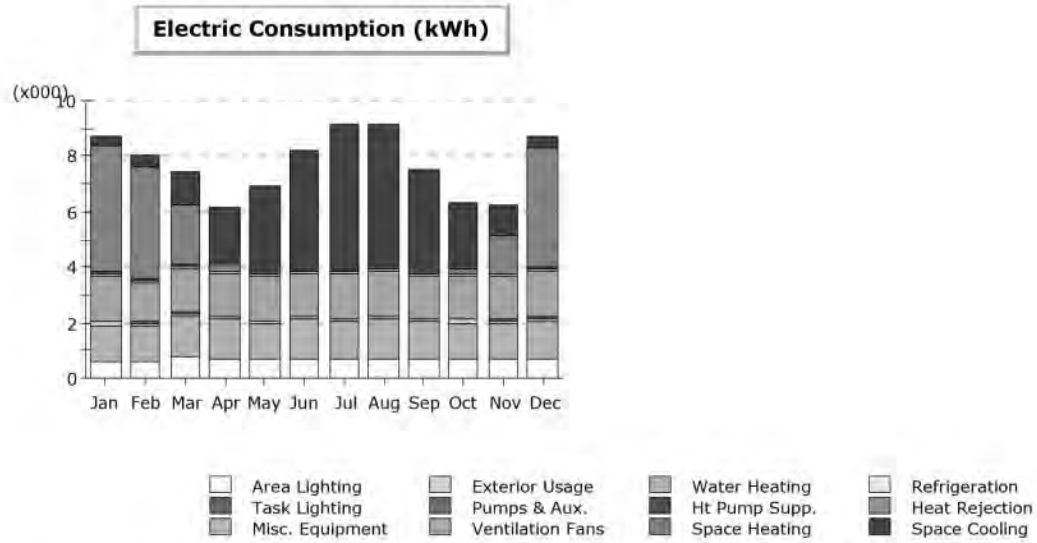

Electric Consumption (kWh x000)

	Jan	Feb	Mar	Apr	May	Jun	Jul	Aug	Sep	Oct	Nov	Dec	Total
Space Cool	0.35	0.43	1.15	2.02	3.22	4.35	5.29	5.24	3.76	2.43	1.19	0.46	29.87
Heat Reject.	-	-	-	-	-	-	-	-	-	-	-	-	-
Refrigeration	-	-	-	-	-	-	-	-	-	-	-	-	-
Space Heat	4.57	4.02	2.18	0.24	0.01	-	-	-	0.00	0.15	1.36	4.31	16.84
HP Supp.	0.05	0.05	0.03	-	-	-	-	-	-	-	0.00	0.05	0.19
Hot Water	0.07	0.07	0.09	0.08	0.07	0.07	0.07	0.07	0.06	0.06	0.07	0.08	0.87
Vent. Fans	1.61	1.45	1.59	1.55	1.60	1.56	1.63	1.62	1.55	1.60	1.55	1.60	18.92
Pumps & Aux.	0.07	0.05	0.03	0.00	-	-	-	-	-	0.00	0.03	0.07	0.25
Ext. Usage	0.13	0.11	0.12	0.12	0.10	0.09	0.10	0.13	0.13	0.13	0.13	0.13	1.42
Misc. Equip.	1.25	1.23	1.47	1.41	1.30	1.41	1.36	1.41	1.35	1.30	1.30	1.36	16.14
Task Lights	-	-	-	-	-	-	-	-	-	-	-	-	-
Area Lights	0.64	0.62	0.74	0.71	0.66	0.71	0.69	0.71	0.68	0.66	0.66	0.69	8.16
Total	8.73	8.03	7.41	6.11	6.96	8.19	9.13	9.19	7.54	6.35	6.27	8.74	92.65

Gas Consumption (Btu)

	Jan	Feb	Mar	Apr	May	Jun	Jul	Aug	Sep	Oct	Nov	Dec	Total
Space Cool													
Heat Reject.													
Refrigeration													
Space Heat													
HP Supp.													
Hot Water													
Vent. Fans													
Pumps & Aux.													
Ext. Usage													
Misc. Equip.													
Task Lights													
Area Lights													
Total													

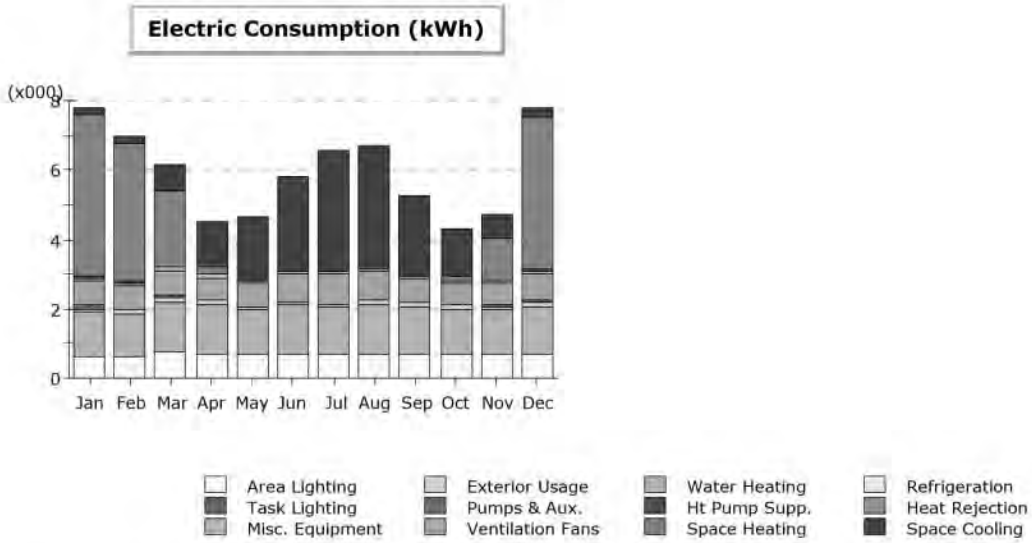

Electric Consumption (kWh x000)

	Jan	Feb	Mar	Apr	May	Jun	Jul	Aug	Sep	Oct	Nov	Dec	Total
Space Cool	0.23	0.25	0.73	1.29	1.83	2.76	3.47	3.51	2.30	1.42	0.64	0.32	18.76
Heat Reject.	-	-	-	-	-	-	-	-	-	-	-	-	-
Refrigeration	-	-	-	-	-	-	-	-	-	-	-	-	-
Space Heat	4.64	3.94	2.19	0.23	0.02	0.01	0.00	0.01	0.02	0.12	1.24	4.37	16.78
HP Supp.	0.06	0.06	0.03	-	-	-	-	-	-	-	0.00	0.06	0.22
Hot Water	0.07	0.07	0.09	0.08	0.07	0.07	0.07	0.07	0.06	0.06	0.07	0.08	0.87
Vent. Fans	0.72	0.64	0.75	0.67	0.66	0.78	0.86	0.85	0.70	0.63	0.63	0.75	8.62
Pumps & Aux.	0.07	0.06	0.03	0.00	-	-	-	-	-	0.00	0.03	0.07	0.26
Ext. Usage	0.13	0.11	0.12	0.12	0.10	0.09	0.10	0.13	0.13	0.13	0.13	0.13	1.42
Misc. Equip.	1.25	1.23	1.47	1.41	1.30	1.41	1.36	1.41	1.35	1.30	1.30	1.36	16.14
Task Lights	-	-	-	-	-	-	-	-	-	-	-	-	-
Area Lights	0.64	0.62	0.74	0.71	0.66	0.71	0.69	0.71	0.68	0.66	0.66	0.69	8.16
Total	7.81	6.99	6.14	4.51	4.65	5.84	6.54	6.69	5.24	4.33	4.69	7.81	71.22

Gas Consumption (Btu)

	Jan	Feb	Mar	Apr	May	Jun	Jul	Aug	Sep	Oct	Nov	Dec	Total
Space Cool													
Heat Reject.													
Refrigeration													
Space Heat													
HP Supp.													
Hot Water													
Vent. Fans													
Pumps & Aux.													
Ext. Usage													
Misc. Equip.													
Task Lights													
Area Lights													
Total													

UCRM-12 Window Film

Building	Measure	Annual kW Savings	Annual kWh Savings	Demand Savings	Energy Savings	Total Cost Savings
GC	Window Film	0		$0	$0	$0
CH	Window Film	16	11,440	$57	$884	$940
JD	Window Film	0		$0	$0	$0
DS	Window Film	0		$0	$0	$0
HD	Window Film	0		$0	$0	$0
P2	Window Film	0		$0	$0	$0
P4	Window Film	0		$0	$0	$0
JW	Window Film	0		$0	$0	$0
Jail	Window Film	0		$0	$0	$0
TOTAL ALL BUILDINGS		16	11,440	$57	$884	$940
TOTAL AFTER SAFETY FACTOR		**13**	**9,152**	**$45**	**$707**	**$752**

Electric Rate for GC & Jail

Season	Cost per kW	Cost per kWh
Year Around	$3.44	$0.07726

Electric Rate for JD

Season	Cost per kW	Cost per kWh
Year Around	$4.50	$0.07650

Electric Rate

Season	Cost per kW	Cost per kWh
Year Around	$0.00	$0.08786

Electric Rate for CH & HD

Season	Cost per kW	Cost per kWh
Year Around	$3.61	$0.07726

Electric Rate for P2

Season	Cost per kW	Cost per kWh
Year Around	$3.38	$0.06893

Electric Rate for DS, P4 & JW

Season	Cost per kW	Cost per kWh
Year Around	$0.00	$0.08109

Savings Safety Factor: 80%

Window Air Leakage at Court House

L = 4005 x A x (Rp)1/2

Where:
Lv = Leakage velocity in FPM
L = Air leak age in CFM
Rp = Room pressure in in-WG
A = Opening area in square feet

Project Specific Data

A =	1.5	SqFt
Rp =	0.05	inch-WG
Bldg =	21,396	SqFt

L =	1,343	CFM
Leakage Rate=	0.063	CFM/SqFt

Modeled Leakage Rate Reduction =	0.05	CFM/SqFt		
Calculated Energy/Demand Savings =	3480	kWh	10.4	kW
Electric Cost Savings =	$269		$38	
Total Cost Savings =	$307			

Electric Rate for CH & HD

Season	Cost/kW	Cost/kWh
Year Around	$3.61	$0.07726

C. MANUFACTURER'S LITERATURE

UCRM 1: LED Lighting

UCRM 2: Power Conditioning

UCRM 3: Solar PV

UCRM 5: Building Automation System

UCRM 6: Water Controls

UCRM 7: Window Film

UCRM 9: HVAC Upgrades

DRAFT

This document contains Performance Services Trade Secrets and Confidential information to be used by the addressee for evaluating the PSI proposal. Addressee shall not disclose the Confidential information to third parties without written consent of Performance Services.

UCRM 1: LED LIGHTING

DRAFT

This document contains Performance Services Trade Secrets and Confidential information to be used by the addressee for evaluating the PSI proposal.
Addressee shall not disclose the Confidential information to third parties without written consent of Performance Services.

eTECH LED™

FASTFIT®

T8 - A6 Series

External Power LED Tubes

SPECIFICATION DATA

Model:	T82 - A6 -10	T83 - A6 - 10	T84 - A6 - 13	T84 - A6 - 15	T84 - A6 - 18	T84 - A6 - 22
Lm/W:	130.0	129.0	130.4	130.0	137.6	132.0
Rated Wattage @ 5000K:	9.3	10.0	13.13	16.3	18.1	21.5
Rated Lumens @ 5000K:	1209	1290	1712	2119	2490	2838
CRI:	87.0	82.0	80.3	82.5	87.0	87.0
THD @ 120VAC:	16.05	15.8	10.84	10.84	13.67	12.25
DUV:	0.0023	0.0035	0.0051	0.0051	0.0022	0.0082
Power Supply*:	ETech LED EXPS A11 Series - 100-277VAC / Class 2 / 0-10VDC Dimming & Non Dimming Option					
Lamp Base:	G13 Bi-pin					
CCT Options:	3000K / 3500K / 4000K / 4500K / 5000K					
L70 Lifespan:	50,000 Hrs.					
Beam Angle / Field Angle	120° / 160°					
Length / Diameter:	23.62in / 1.02in	35.43in / 1.02in	47.24in / 1.02in			
Weight:	6.5oz. / 185g	12.8oz. / 365g	13oz. / 370g			
Operation Temperature:	10˚C to +40˚C Ambient					
Limited Warranty:	10 Years					

Notes: *Refer to ETech LED EXPS A11 Series Power Supply Spec. Sheet for Specifications and Configurations.

Tested Values@Ta=25°C All values are nominal.

PART NUMBER SPECIFICATION			*Part Number Example: EXPS-T82-A6-10-30-ND*	
EXPS -	-	-	-	-
Series	Length / Series	Nominal Wattage	CCT Option	Dimming Option
External Power Supply	T82 - A6 (2ft)	10 (10 Watts)	30 (3000K) 35 (3500K) 40 (4000K) 45 (4500K) 50 (5000K)	D (0-10VDC Dimming) ND (Non Dimming)
	T83 - A6 (3ft)	10 (10 Watts)		
	T84 - A6 (4ft)	13 (13 Watts) 15 (15 Watts) 18 (18 Watts) 22 (22 Watts)		

PROJECT SPECIFICATION		
Project:	Part Numbers:	Quantity:
Approved:		
Date:		

(920) 267 6109 information@etechled.com www.etechled.com

©2016 eTech LED LLC -FF-T8-A6 V2.4

369773c 1 04.09.14

Maestro® Dual Technology Sensor Switch

The Maestro® Dual Technology (Dual Tech) Occupancy Sensor Switch applies our exclusive XCT™ Technology to the ultrasonic as well as the passive infrared technology in this sensor to create a product that can detect very fine motion, such as typing. This product also includes all of the great features found in the rest of the Maestro® sensor family, including: adaptive relay switching, smart ambient light detection, and simple button presses for changing settings. The Maestro® Dual Tech Occupancy Sensor Switch is available in single-circuit and dual-circuit versions.

The single-circuit versions (MS-A102, MS-B102) can be used to meet many of the Title 20/24, ASHRAE 90.1, and IECC code requirements such as "automatic shutoff". The dual-circuit versions (MS-A202, MS-B202) can be used to meet many of the Title 20/24, ASHRAE 90.1, and IECC code requirements such as "automatic shutoff" and "multi-level lighting control". To find some examples of code-specific applications, visit www.lutron.com/energycodes

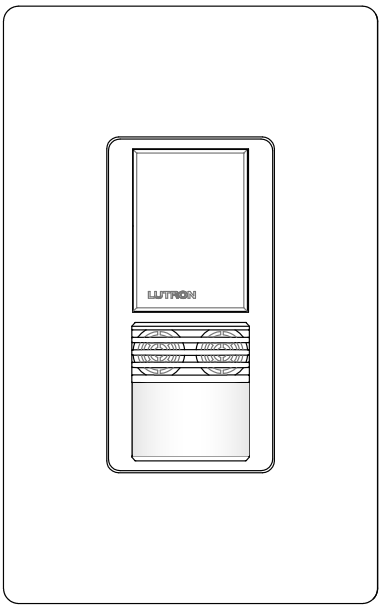

MS-A102-XX (Occupancy model)
MS-A102-V-XX (Vacancy model)
MS-B102-XX (Occupancy model)
MS-B102-V-XX (Vacancy model)

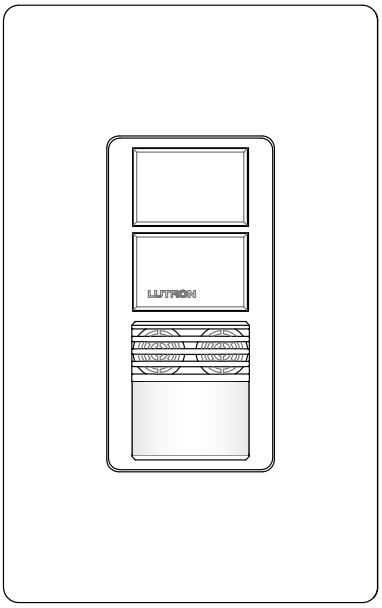

MS-A202-XX (Occupancy model)
MS-B202-XX (Occupancy model)

Features

- XCT™ Technology for major, minor, fine, and very fine motion detection
- 180° sensor field-of-view
- Tamper-resistant PIR lens
- Up to 900 ft^2 (81 m^2) major motion coverage and 400 ft^2 (36 m^2) minor motion coverage
- Two Ambient Light Detect (ALD) options:
  - Learning ALD Mode:
    Uses adaptive algorithm.
    Sensor learns user's preferred light level over time.
  - Fixed ALD mode:
    Four selectable light level thresholds: Hi, Med, Low, Min
- Occupancy models (MS-A102-XX, MS-B102-XX, MS-A202-XX, MS-B202-XX) can be set to Auto-ON/Auto-OFF or Manual-ON/Auto-OFF per circuit
- Dual-circuit models (MS-A202, MS-B202) meet Title 24 requirements for multi-level lighting control.
- Single-circuit "Vacancy" models (MS-A102-V-XX, MS-B102-V-XX) available to meet Title 24/Title 20 requirements for vacancy sensors.
- Adjustable timeout for each circuit (1, 5, 15, or 30 minutes)
- Sensitivity adjustment
  - PIR (Hi, Med, Low, Min)
  - Ultrasonic (Hi, Med, Low, Off)
- Switches all lighting loads: incandescent, halogen, ELV, MLV, CFL, LED, magnetic fluorescent, electronic fluorescent
- Switches fan loads at 120 V~
- MS-B102, MS-B102-V work with Maestro® accessory switches in multi-location applications
- MS-A models DO NOT require neutral wiring, while the MS-B models DO require neutral wiring.

Notes:

- "XX" in the model number represents color/finish code. See **Colors and Finishes** at end of document.
- Wallplate not included.

LUTRON® SPECIFICATION SUBMITTAL Page 1

Job Name:	Model Numbers:	
Job Number:		

Specifications

Regulatory Approvals

- UL® Listed to U.S. and Canadian safety requirements (applies only to MS-B102, MS-B102-V, MS-B202)
- NOM certified
- Title 20/24 certified lighting control device

  – Complies with Title 20 and Title 24 section 110.9

Power/Load Control

- 120–277 V~ 50/60 Hz

Key Design Features

- Dual Sensing Technology
- Switches all lighting loads
- 6 A of lighting load per circuit at 120–277 V~
- 4.4 A (1/6 HP) of fan load per circuit at 120 V~
- Crush/tamper resistant lens
- Smart Ambient Light Detection (ALD)
- Fixed Ambient Light Detection
- Adaptive zero-cross switching algorithm for extended relay life (patent pending)
- XCT™ Technology for major, minor, fine, and very fine motion detection
- Programmable Circuit Swapping eliminates need for rewiring to reassign circuits after installation of a dual-circuit product. (patent pending)
- Product ground current does not exceed 0.5 mA

Environment

- Ambient operating temperature: 32 °F to 104 °F (0 °C to 40 °C), 0%–90% humidity, non-condensing. Indoor use only.

Warranty

- 5-Year Limited Warranty. For additional Warranty information, please visit www.lutron.com/TechnicalDocumentLibrary/Sensor_Warranty.pdf

Sensor Detection

Lutron® Dual Tech sensors operate by triggering initial occupancy using PIR technology, and maintain occupancy using both ultrasonic and PIR technology.

Advanced Features

Switching

- Adaptive zero-cross switching—maximizes relay life by switching at the point of minimum energy on the AC power curve (patent pending). Actively adapts to variations in relay timing.

Additional Information on Sensors

- For single-circuit PIR Maestro® Occupancy Sensor Switch models, please see Lutron® P/N 369666
- For Maestro® Occupancy Sensor C•L® Dimmer models, please see Lutron® P/N 369748
- For dual-circuit PIR Maestro Occupancy Sensor Switch, please see Lutron® P/N 369758
- For more information, please see www.lutron.com/occvacsensors
- Lutron Technical Hotline: 1.800.523.9466.

Custom Settings

Default settings shown in bold

- Timeout

- 30 min
- **15 min**
- 5 min
- 1 min

Mode **- Sensor Modes**

Lights automatically turn off in all sensor modes

- **Occ -Occupancy mode (No ALD)** [1,2,3]
- Lrn - Occupancy with learning ALD mode
- Fixd - Occupancy with fixed ALD mode
- Vac - Vacancy mode (No ALD) [2,3]

1 MS-A102-XX, MS-B102-XX default is Occ
2 MS-A102-V-XX, MS-B102-V-XX is locked as Vac
3 MS-A202-XX, MS-B202-XX defaults are: Circuit 1 - Occ, Circuit 2 - Vac

- Ultrasonic Sensitivity

- High
- **Med**
- Low
- Off

PIR **- Passive Infrared Sensitivity**

- **High**
- Med
- Low
- Min

Additional Settings

Fixed ALD Light Level

- Hi
- Med
- **Low***
- Min

* "Low" is the default setting for any sensor that is set by the user to: Occupancy with fixed ALD mode

Off-While-Occupied

- **Enabled**
- Disabled

Walk-Thru Mode

- Enabled
- **Disabled**

Custom Settings - Details

Ambient Light Detection (ALD) mode

Lights turn on only when natural light in the room is below the set threshold.

– Learning: The ambient light threshold adjusts to the user's preference via manual interaction with the sensor switch.

– Fixed: Choose a fixed ALD light level from four pre-set options:
High, Medium, Low, and Minimum

Manual Off-While-Occupied Options

ENABLED (default setting)

– When the sensor switch is manually turned off, the sensor switch will not turn the lights back on automatically while the room is occupied.

– Once the room is vacated, the Auto-On feature returns to normal operation after the timeout period has expired.

– This may be the preference in conference rooms or classrooms while viewing presentations. This feature requires motions to keep the lights off.

DISABLED

– When the sensor switch is manually turned off, the Auto-On feature will return to normal operation after 25 seconds.

– This may be the preference in a restroom if the user always wants the lights to turn on upon entering and the lights to turn off when the room is vacant.

Walk-Thru Mode

ENABLED [1]

– If motion is not detected within 3 minutes after initial occupancy, the lights will turn off after 3 minutes, instead of the current timeout.

– This setting may be the preference in commercial applications where personnel may briefly trigger sensors during non-working hours.

DISABLED (default setting)

– When motion is detected, the lights will ALWAYS remain on for the entire timeout duration, regardless of the duration of occupancy detection.

1 1 minute timeout would be overridden if walk-thru mode is also ENABLED

Load Type and Capacity

Control	Neutral Connection Required	Vacancy Only	Number of Circuits	Voltage / Load Type / Maximum Load (Anywhere in Gang) [1]	Minimum Load	3-Way with Mechanical Switch	Multi-Location with Accessory Switch
MS-A102			1	120 - 277 V~ Lighting 6 A [2] 120 V~ Fan 4.4 A (1/6 HP) [3]	0 A		
MS-A102-V		✓	1		0 A		
MS-A202			2		0 A		
MS-B102	✓		1		0 A	✓	✓
MS-B102-V	✓	✓	1		0 A	✓	✓
MS-B202	✓		2		0 A	✓	

1 Ratings shown are per circuit.

2 Sensor Switch Load Type: Designed for use with permanently installed incandescent, halogen, MLV, ELV, CFL, LED, magnetic fluorescent, and electronic fluorescent lighting loads.

3 When controlling light and fan loads simultaneously on a single-circuit, maximum load capacity per circuit is 4.4 A at 120 V~.

Sensor Switch Placement

- The sensor switch performs better with an unobstructed view of room occupants.
- Hot objects and moving air currents can affect the performance of the sensor switch. The sensor switch performs best when located 6 ft (1.8 m) or more away from hot objects or moving air currents.
- The PIR performance depends on a temperature differential between the ambient room temperature and that of room occupants. Warmer rooms may reduce the ability of the sensor switch to detect occupants.
- The ultrasonic performance can be affected by air currents and moving objects. Consider the effects of fans, HVAC vents, open windows, or moving objects when installing the sensor switch.
- If the sensor sees a specific area that is not desired (e.g., hallway), Lutron offers a lens mask kit (Lutron® P/N 50013614) that can be ordered through Tech Support (1.800.523.9466). Alternatively, selectively placing opaque tape (e.g., painter's tape, electrical tape, masking tape) over certain parts of the lens can limit it's field of vision to block undesired detection areas. Masking the lens may effect ALD performance, but DOES NOT block ultrasonic frequencies.

Definitions

Major motion: movement of a person entering or passing through an area.

Minor motion: movement of a person occupying an area and engaging in small activities (e.g., reaching for a telephone, turning the pages of a book, opening a file folder, picking up a coffee cup).

Fine Motion: movement of a person occupying an area and engaging in very small activities (e.g., reading a magazine).

Very Fine Motion: movement of a person occupying an area and engaging in very small activities (e.g., typing on a keyboard).

Sensor Switch Placement *(continued)*

NEMA WD7 Coverage

Major motion coverage: 900 ft^2 (81 m^2)

Minor motion coverage: 400 ft^2 (36 m^2)

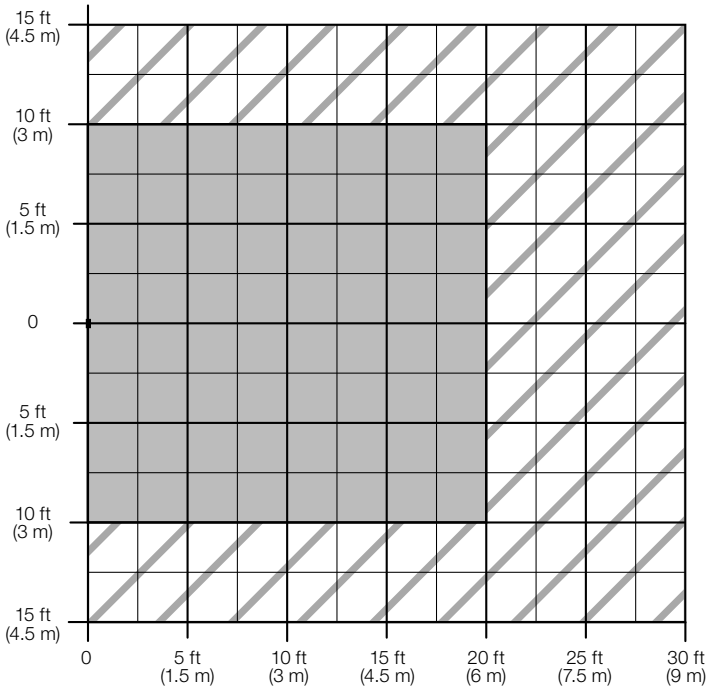

Test Room Dimensions: 37 ft x 38 ft (11.28 m x 11.6 m)
Test Floor Surface Material: Carpet
Sensor Coverage Angle: 180 °
Major motion coverage: Initial trigger motion detection
Minor motion coverage: Maintained motion detection

Passive Infrared Beam Diagram
(For Reference Only)

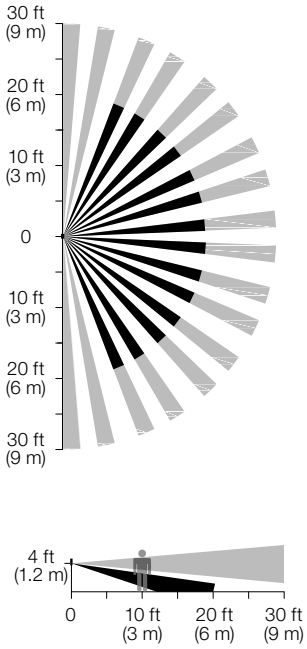

Ultrasonic Coverage
(For Reference Only)

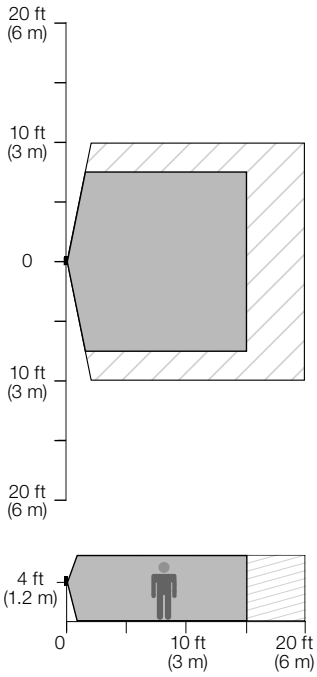

Ultrasonic Frequency: 40 kHz

Dimensions - Single-Circuit
MS-A102, MS-A102-V, MS-B102, MS-B102-V

Measurements shown as: in (mm).

Front View **Side View**

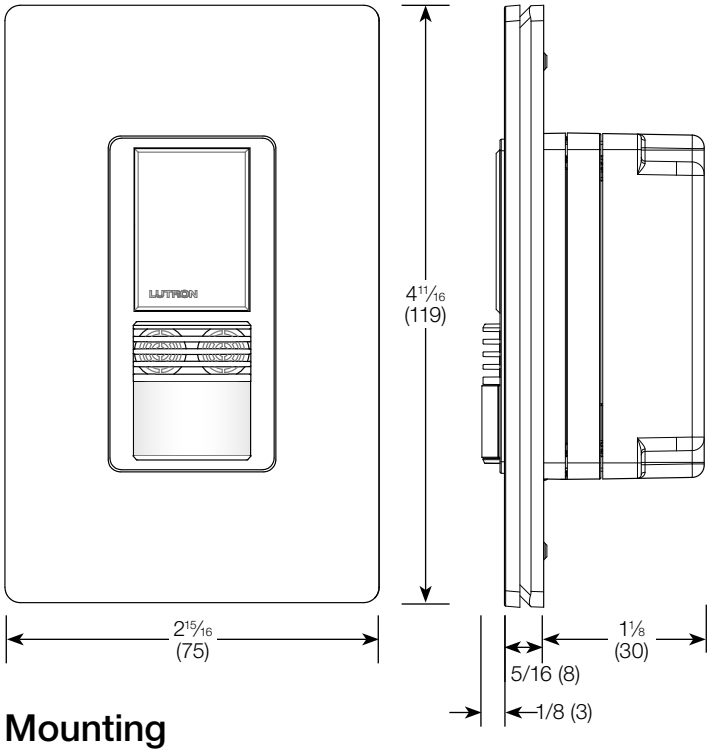

Operation

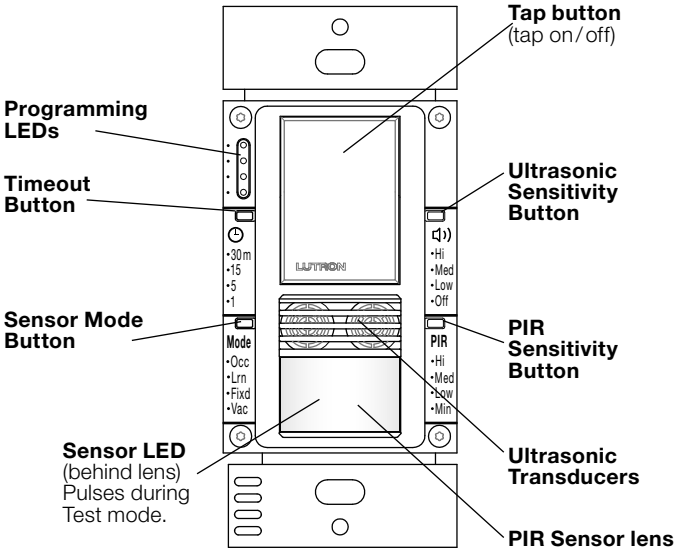

Mounting

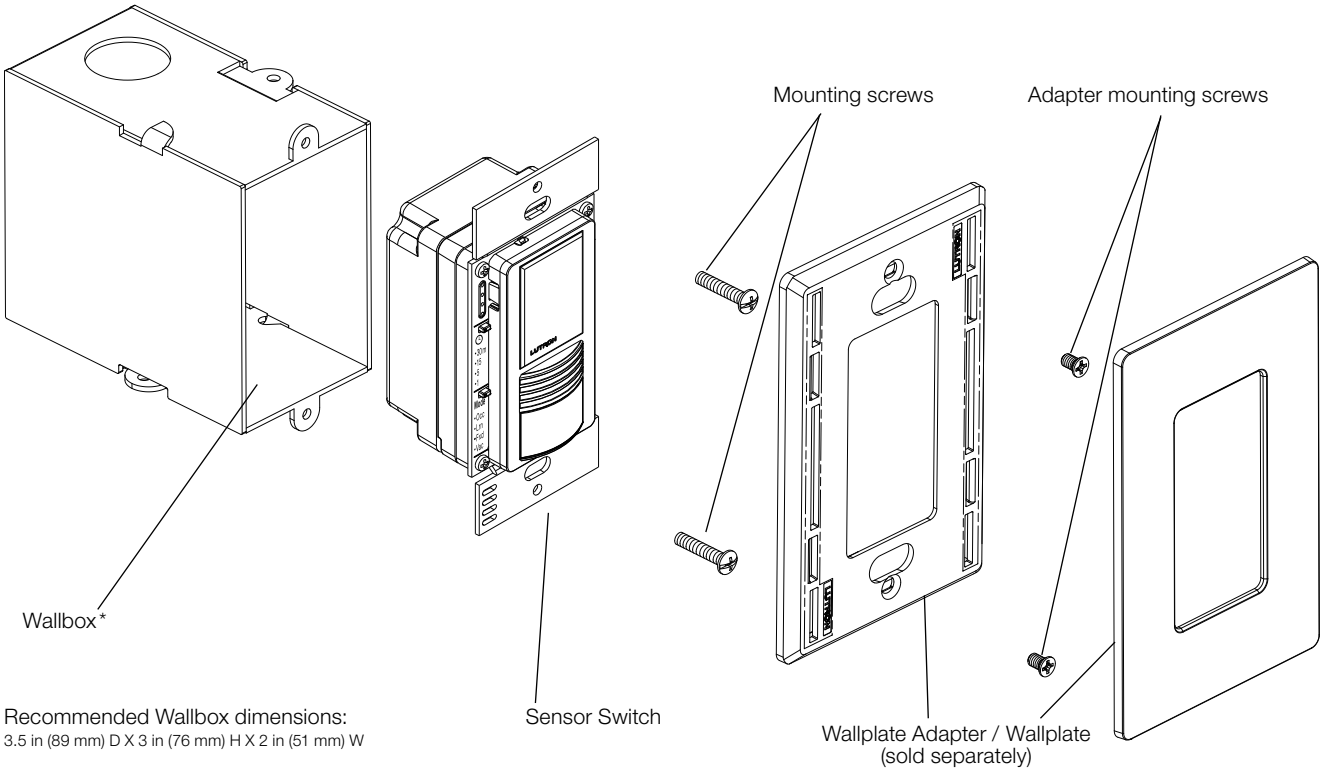

* Recommended Wallbox dimensions:
3.5 in (89 mm) D X 3 in (76 mm) H X 2 in (51 mm) W

Dimensions - Dual-Circuit MS-A202, MS-B202

Measurements shown as: in (mm).

Front View **Side View**

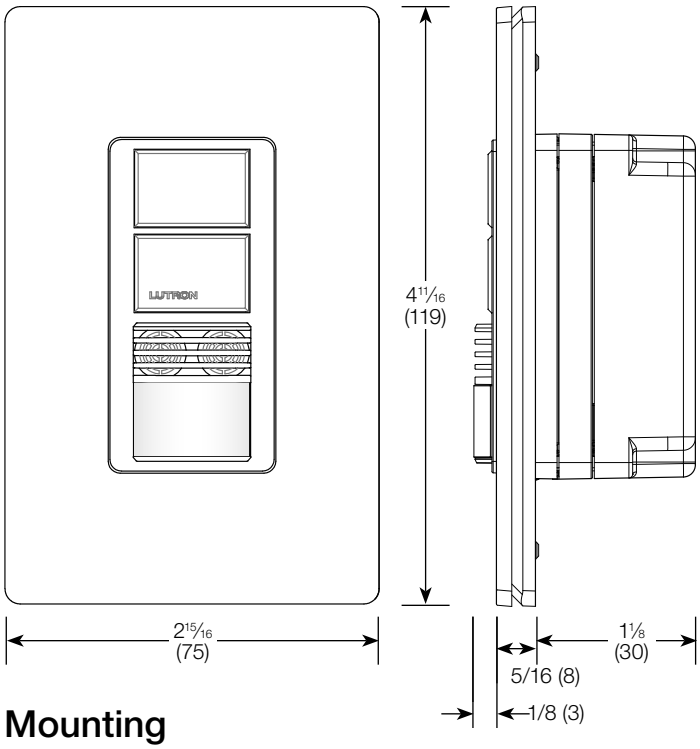

Operation

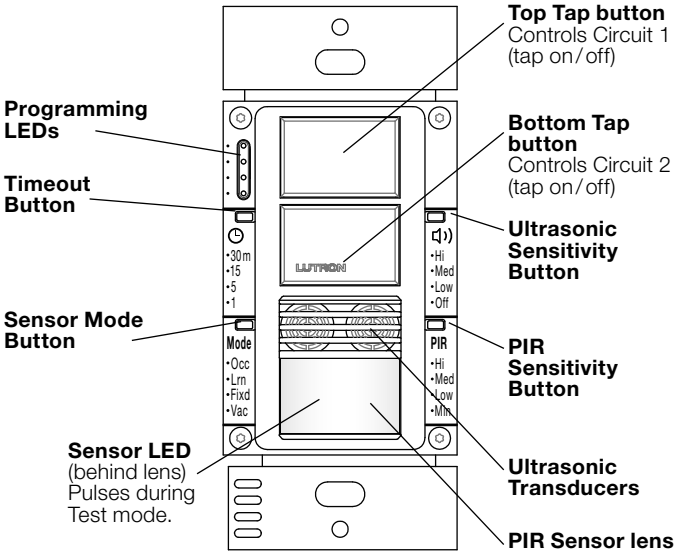

Mounting

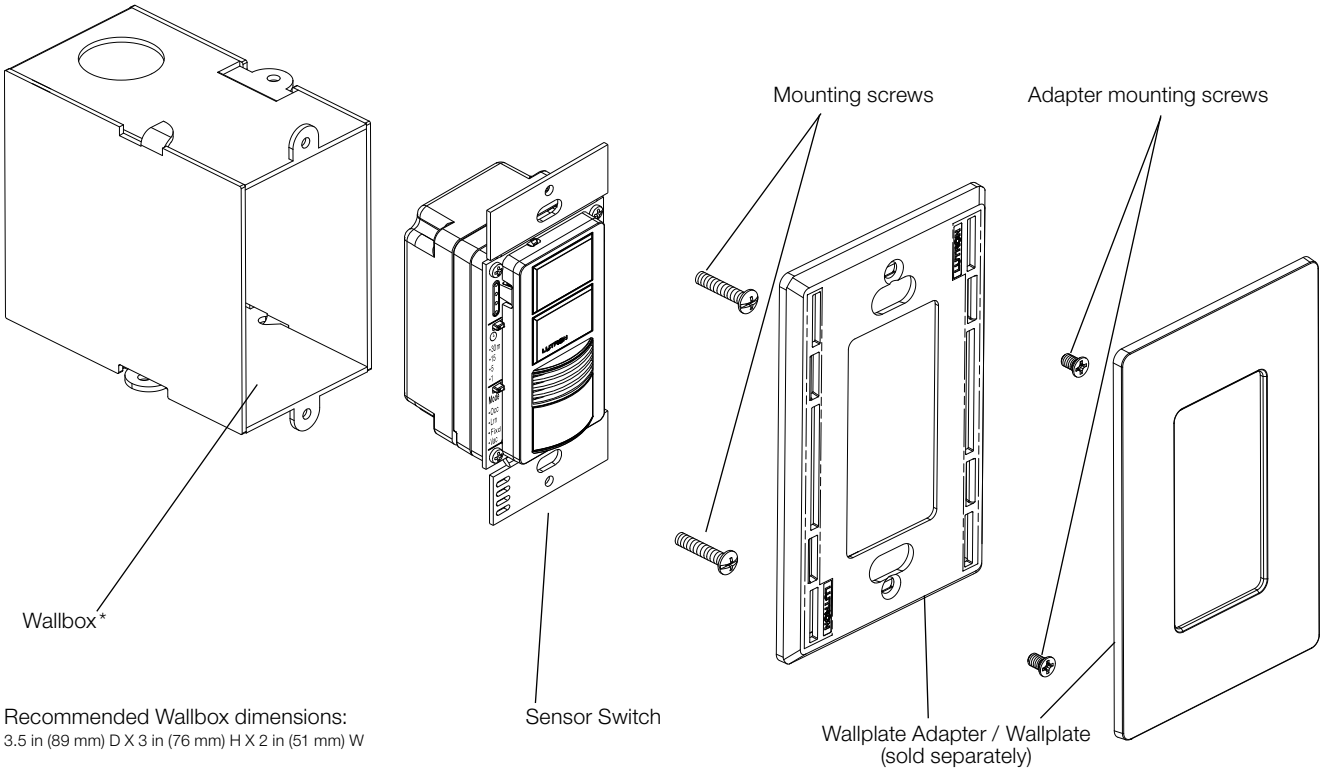

* Recommended Wallbox dimensions:
3.5 in (89 mm) D X 3 in (76 mm) H X 2 in (51 mm) W

Wiring Diagrams - Single-Circuit

Wiring Diagram 1

Single Pole Wiring - Single-Circuit (MS-A102, MS-A102-V)

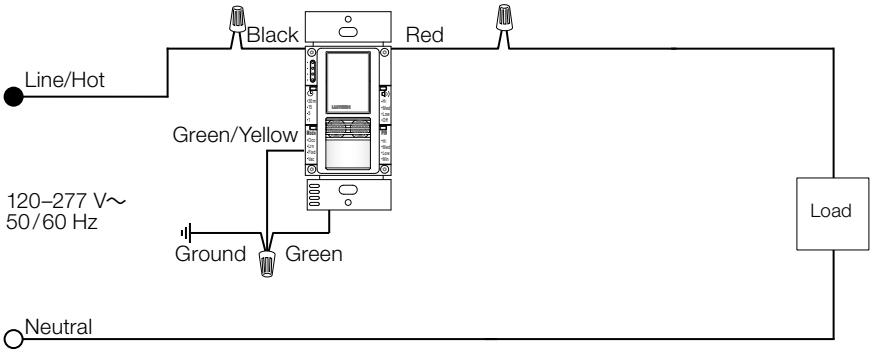

Wiring Diagram 2

Single Pole Wiring - Single-Circuit (MS-B102, MS-B102-V)

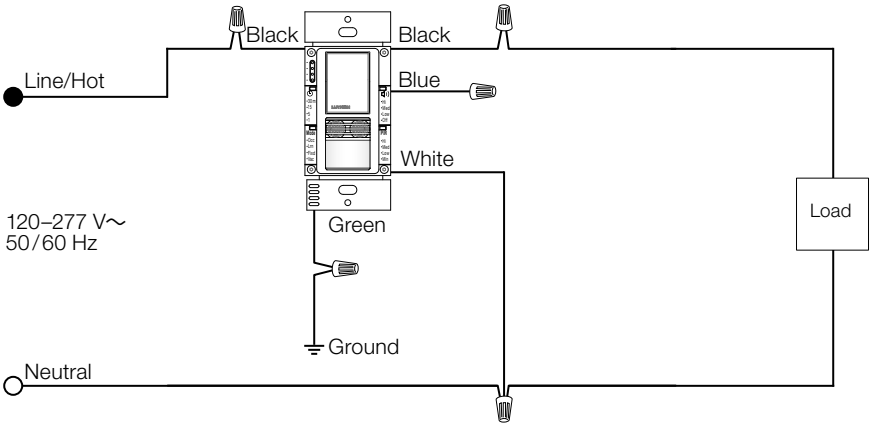

continued on next page...

Wiring Diagram 3

120 V~ Multi-Location Installation with Maestro® Accessory Switches (MS-B102, MSB102-V)

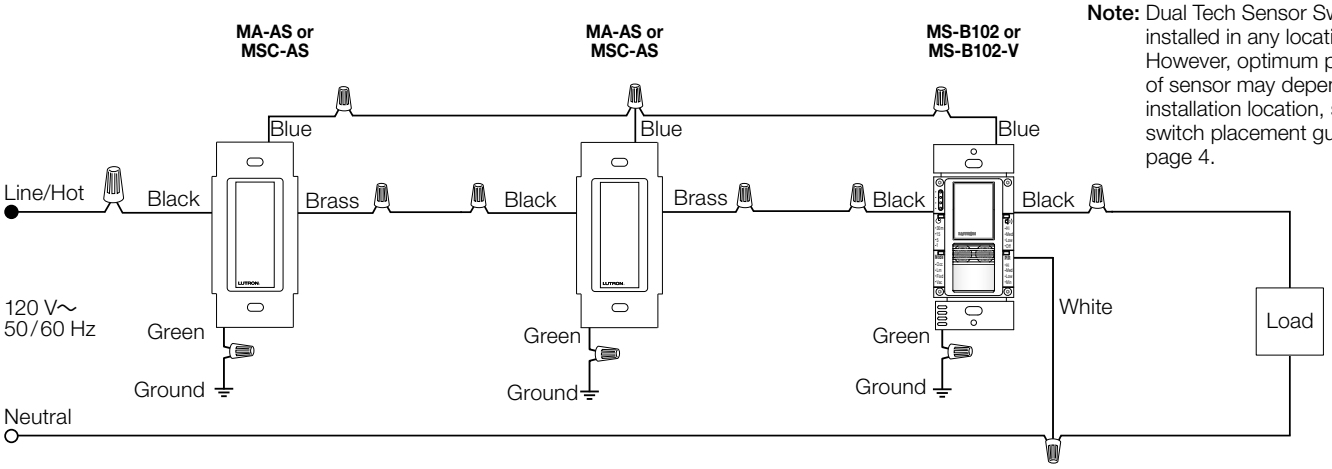

Note: Dual Tech Sensor Switch can be installed in any location. However, optimum performance of sensor may depend upon installation location, see sensor switch placement guidelines on page 4.

Wiring Diagram 4

220/240 V~ Multi-Location Installation with Maestro® Accessory Switches (MS-B102, MSB102-V)

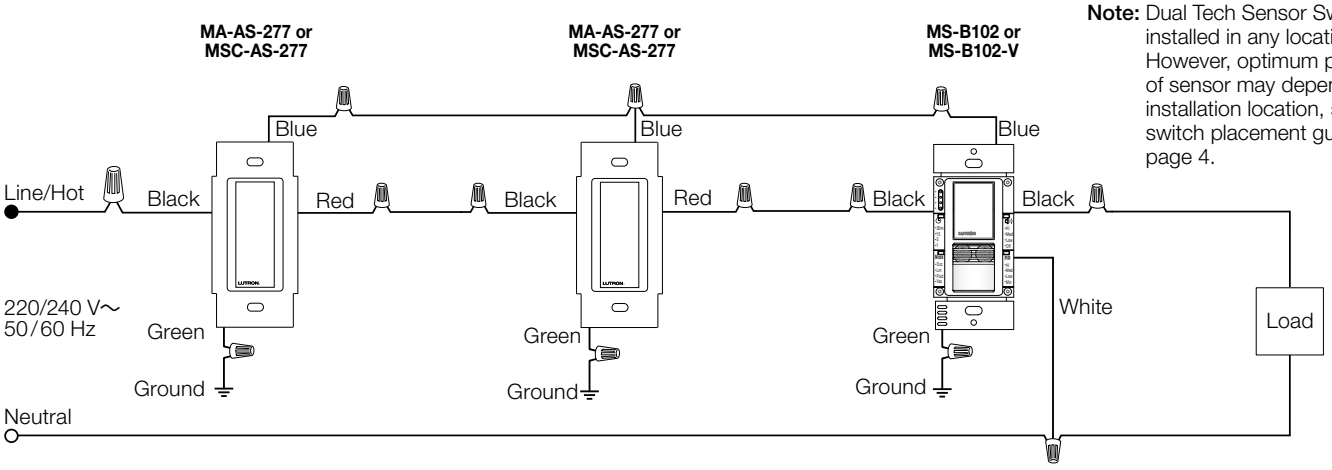

Note: Dual Tech Sensor Switch can be installed in any location. However, optimum performance of sensor may depend upon installation location, see sensor switch placement guidelines on page 4.

Wiring Diagram 5

277 V~ Multi-Location Installation with Maestro® Accessory Switches (MS-B102, MSB102-V)

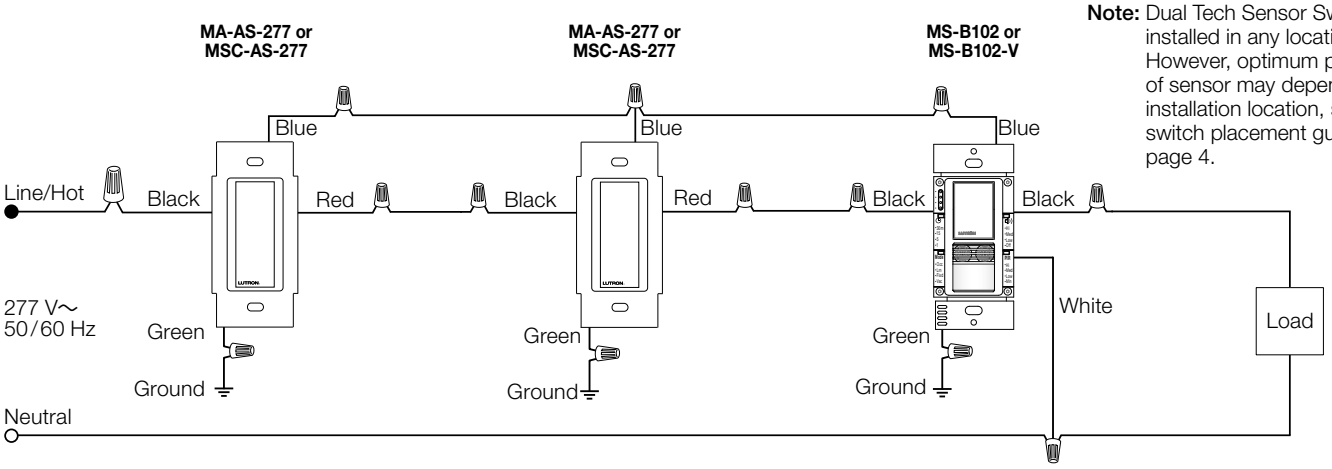

Note: Dual Tech Sensor Switch can be installed in any location. However, optimum performance of sensor may depend upon installation location, see sensor switch placement guidelines on page 4.

Wiring Diagrams - Single-Circuit *(continued)*

Wiring Diagram 6

3-Way Installation - Single-Circuit (MS-B102, MS-B102-V)

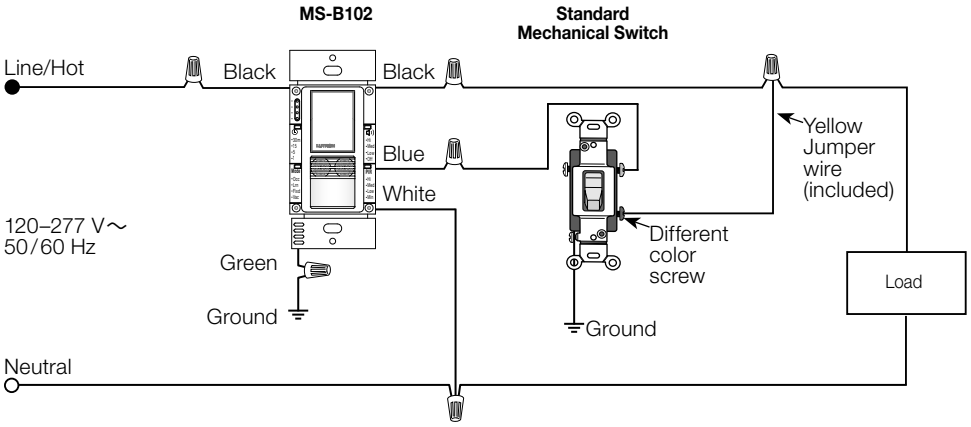

Note: Dual Tech Sensor Switch can be installed in any location. However, optimum performance of sensor may depend upon installation location, see sensor switch placement guidelines on page 4.

3-Way Installation

For retrofit 3-way installations the mechanical switch needs to be rewired as shown in the diagram below after wiring the Dual Tech Sensor Switch. Otherwise the 3-way installation will not work as expected. Single Pole mechanical switches may also be used in a 3-way installation with MS-B102, MS-B102-V and MS-B202 models.

1. Connect Ground: Ensure the bare copper or green ground wire from the wallbox is connected to the green ground screw of the mechanical switch.

2. Tag circuit Common: Your 3-way mechanical switch should have three screw terminals, two of the same color, and one of a different color. Tag the wire that is connected to the screw terminal of a different color.

3. Identify the wire that matches the color of the wire you connected to the blue wire of the Maestro® Dual Technology Occupancy Sensor Switch. Connect this wire to one of the two terminals of the same color.

4. Combine the tagged wire, the remaining wire and yellow jumper wire (included) using a wire connector. Connect the other end of jumper wire to the different color screw.

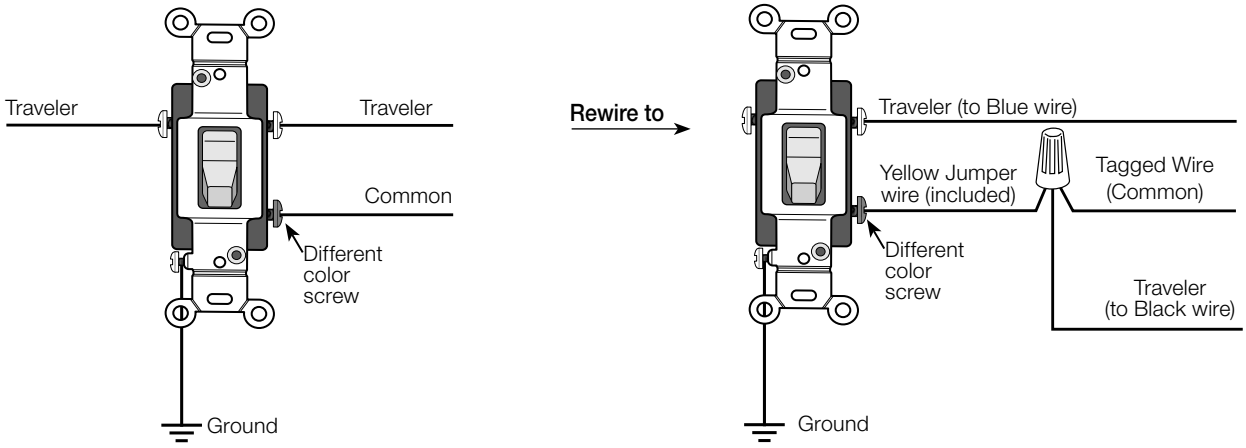

Job Name:	Model Numbers:	
Job Number:		

Wiring Diagrams - Dual-Circuit

Wiring Diagram 1

Single Pole, Single Breaker Feed Wiring - Dual-Circuit (MS-A202)

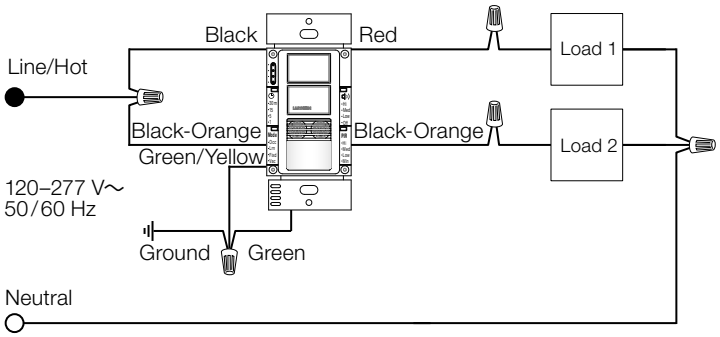

Wiring Diagram 2

Single Pole, Single Breaker Feed Wiring - Dual-Circuit (MS-B202)

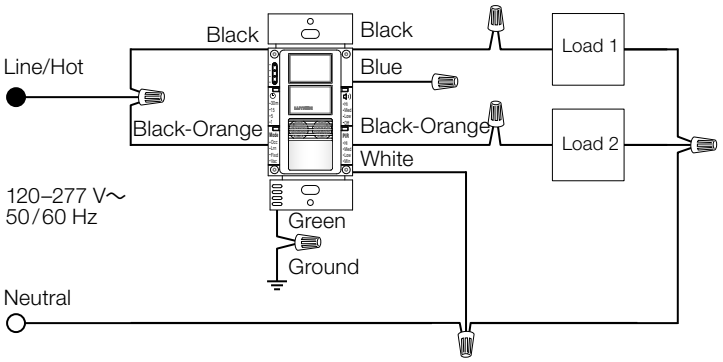

Wiring Diagram 3

Single Pole, Two Breaker Feed Wiring: Dual-Circuit (MS-A202)

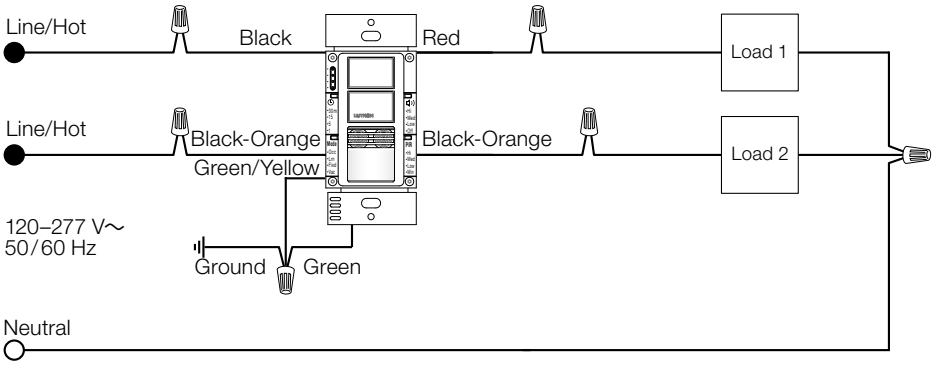

Wiring Diagram 4

Single Pole, Two Breaker Feed Wiring: Dual-Circuit (MS-B202)

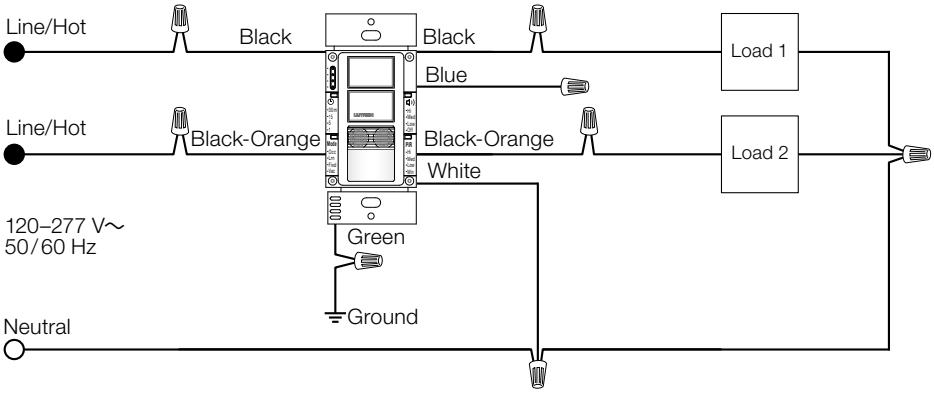

Wiring must comply with NEC® code for wiring multiple branch circuits. Where two or more branch circuits supply devices or equipment on the same yoke, a means to simultaneously disconnect the ungrounded conductors supplying those devices shall be provided at the point at which the branch circuits originate.

continued on next page...

Wiring Diagrams - Dual-Circuit *(continued)*

Wiring Diagram 5

3-Way Installation, Single Breaker Feed Wiring: Dual-Circuit (MS-B202)

NOTE: Do not use Maestro® accessory switches with MS-B202.

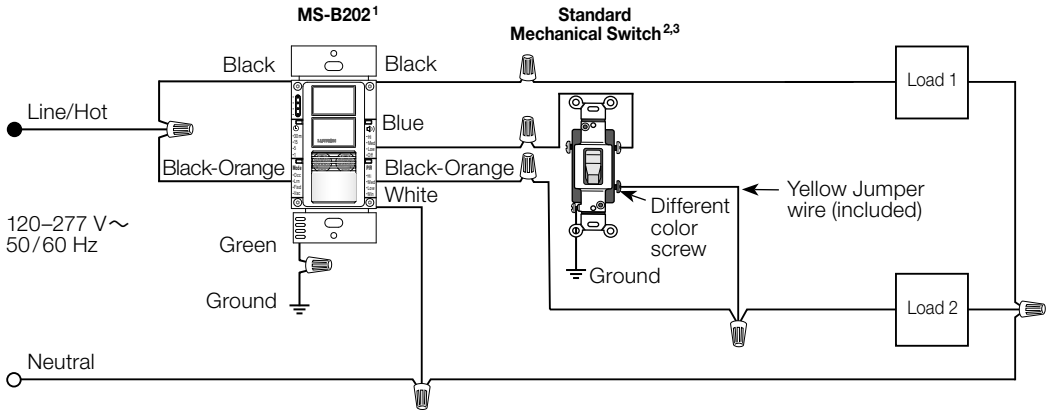

Note: Optimum performance of sensor may depend upon installation location, see sensor switch placement guidelines on page 4.

Wiring Diagram 6

3-Way Installation, Two Breaker Feed Wiring: Dual-Circuit (MS-B202)

Wiring must comply with NEC® code for wiring multiple branch circuits. Where two or more branch circuits supply devices or equipment on the same yoke, a means to simultaneously disconnect the ungrounded conductors supplying those devices shall be provided at the point at which the branch circuits originate.

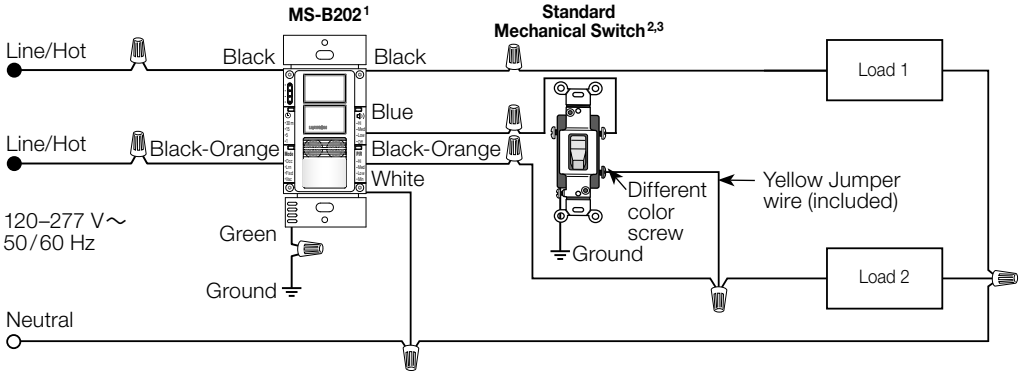

Note: Do not use Maestro® accessory switches with MS-B202.

Note: Optimum performance of sensor may depend upon installation location, see sensor switch placement guidelines on page 4.

1 Dual Tech Sensor Switch can be installed in any location.

2 Mechanical switch may be wired to **either** circuit, and will control both. **Do NOT** wire mechanical switch to **both** circuits.

3 You may use no more than one mechanical switch with a dual-circuit Dual Tech Sensor Switch.

3-Way Installation

For retrofit 3-way installations the mechanical switch needs to be rewired as shown in the diagram below after wiring the Dual Tech Sensor Switch. Otherwise the 3-way installation will not work as expected. Single-Pole mechanical switches may also be used in a 3-way with MS-B102, MS-B102-V and MS-B202 models.

1. Connect Ground: Ensure the bare copper or green ground wire from the wallbox is connected to the green ground screw of the mechanical switch.
2. Tag circuit Common: Your 3-way mechanical switch should have three screw terminals, two of the same color, and one of a different color. Tag the wire that is connected to the screw terminal of a different color.
3. Identify the wire that matches the color of the wire you connected to the blue wire of the Maestro® Dual Technology Occupancy Sensor Switch. Connect this wire to one of the two terminals of the same color.
4. Combine the tagged wire, the remaining wire and yellow jumper wire (included) using a wire connector. Connect the other end of jumper wire to the different color screw.

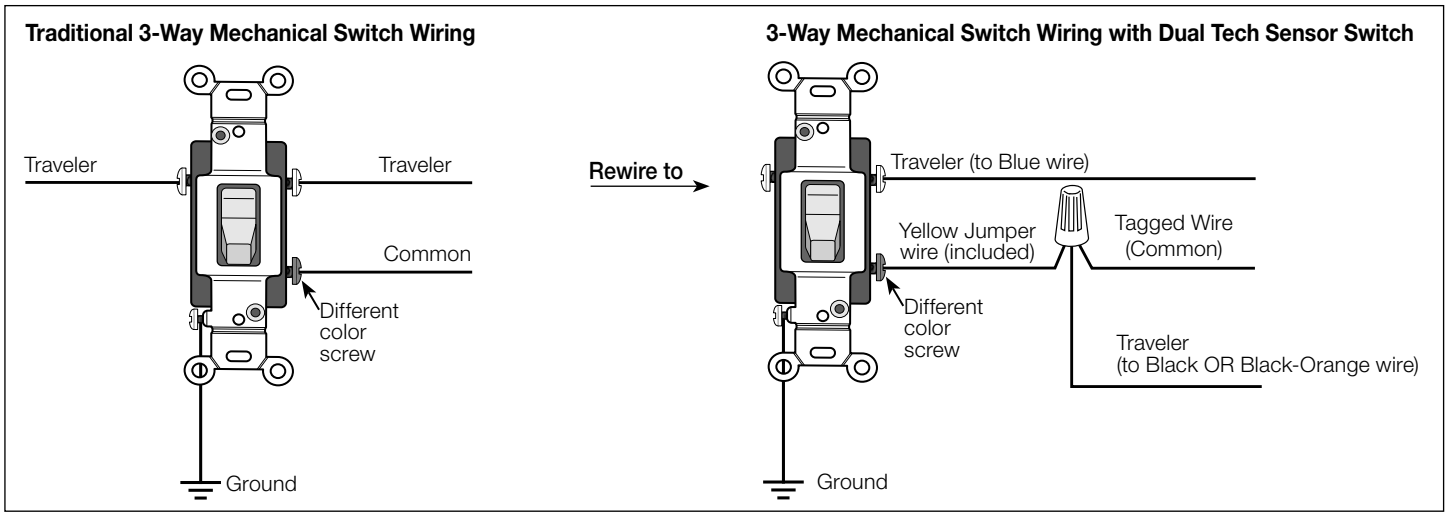

How Loads Operate in 3-Way with Dual-Circuit Sensor Switch (MS-B202)

	Initial Load State		After flipping 3-way mechanical switch	
	Circuit 1	Circuit 2	Circuit 1	Circuit 2
When All Lights are OFF	Off	Off	On	On
When All Lights are ON	On	On	Off	Off
When One Circuit is ON	On	Off	Off	Off
	Off	On	Off	Off

Colors and Finishes

Gloss Finishes

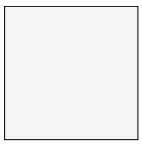
White
WH

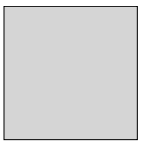
Ivory
IV

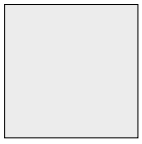
Almond
AL

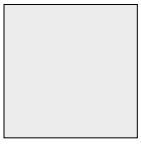
Light Almond
LA

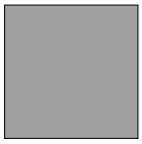
Gray
GR

Brown
BR

Black
BL

Satin Finishes

Hot
HT

Merlot
MR

Plum
PL

Turquoise
TQ

Taupe
TP

Eggshell
ES

Biscuit
BI

Snow
SW

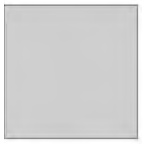
Palladium
PD

Midnight
MN

Sienna
SI

Terracotta
TC

Greenbriar
GB

Bluestone
BG

Mocha Stone
MS

Goldstone
GS

Desert Stone
DS

Stone
ST

Limestone
LS

Sea Glass
SG

- Due to printing limitations, colors and finishes shown cannot be guaranteed to match actual product colors perfectly.
- Color chip keychains are available for more precise color matching:
  Gloss Finishes: DG-CK-1
  Satin Finishes: SC-CK-1

Job Name:	Model Numbers:	
Job Number:		

Elite Dimmable PAR Series

TCP's award winning PARs have just gotten better. With over 500 options, TCP's PAR series combines traditional beauty with top-notch technology.

Limitless options for the following applications:

- Track lights
- Recessed downlights
- Display lights
- Outdoor fixtures that protect lamps from the elements

Great features and benefits:

- Energy efficient: up to 85% less energy than halogen replacements
- Smooth, uniform dimming
- Long life: 25,000 hours
- 120W, 90W, 75W, 60W and 50W replacements
- NEW smooth outer housing
- Excellent color consistency and high color rendering (CRI)
- Available in 2400K, 2700K, 3000K, 3500K, 4100K and 5000K

PAR38 PAR30LN PAR30SN PAR20

TCP®
325 Campus Dr. | Aurora, Ohio 44202 | P: 800-324-1496 | tcpi.com
©TCP DEC 2016/WF31503

ENERGY STAR PARTNER

LED	25,000 hours average rated life, 120 volts

Applications

Ideal for PAR38, PAR30, and PAR20 flood and spot light applications.

- ✚ Track Lights
- ✚ Recessed Downlights
- ✚ Display Lights
- ✚ Outdoor Fixtures that Protect Lamps from the Elements

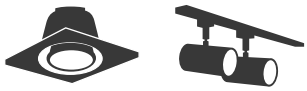

Features	Benefits
Up to 85% less energy than halogen alternatives	Instant energy savings
Long life	Minimizes replacement and maintenance costs
Unique full face optic	Provides designer grade light quality with same look as halogen replacement
Smooth, clean outside housing	Seemlessly blends into lighting applications
Very low heat generation	Perfect for sensitive display lighting such as art galleries
Excellent color consistency and CRI	Enhances colors of focal point while maintaining uniformity throughout lighting installation from lamp to lamp
Light weight	Track or down light installations are not strained by excess weight
UL approved for damp location	Can be used outdoors when protected from elements—withstands humidity indoors/outdoors
Shatter resistant	Lower the risk of injury and breakage

Catalog Number

Notes | Type

Specifications

	PAR38	PAR30LN	PAR30SN	PAR20
Input Line Voltage:	120 VAC	120 VAC	120 VAC	120 VAC
Input Power	17 & 14 W	14 & 12 W	12 & 10 W	10 & 8 W
Input Line Frequency	50/60HZ	50/60HZ	50/60HZ	50/60HZ
Lamp Life (Rated)	25,000 hrs	25,000 hrs	25,000 hrs	25,000 hrs
Minimum Starting Temp	-30ºC	-30ºC	-30ºC	-30ºC
Maximum Operating Temp	40ºC	40ºC	40ºC	40ºC

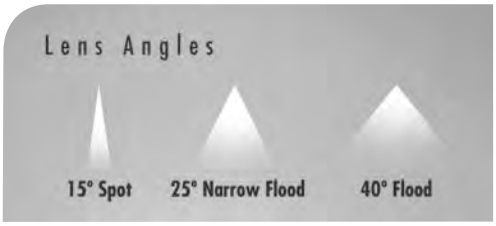

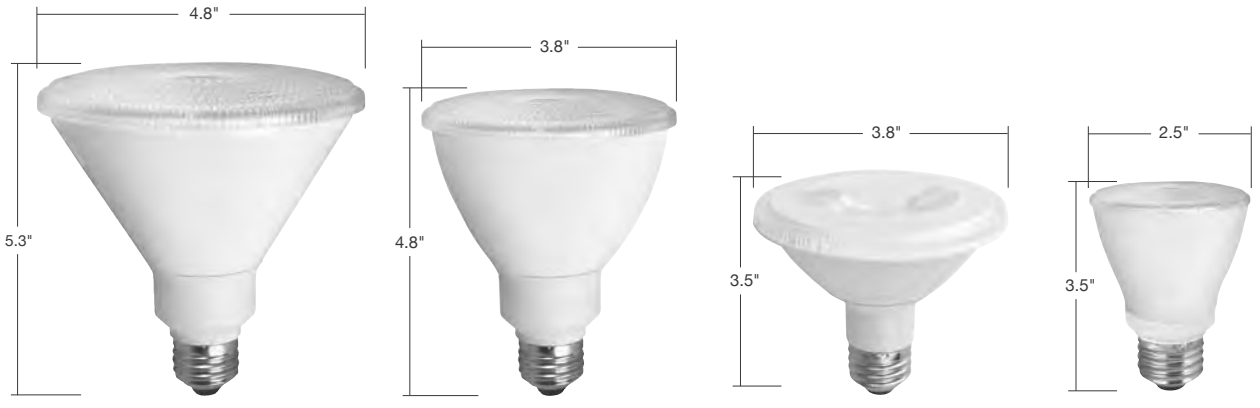

PAR38 PAR30LN PAR30SN PAR20

c UL us 5 YEAR WARRANTY For the most up-to-date specs, please visit www.tcpi.com

Item #	Description	Voltage	Wattage	Incandescent Wattage Comparison	Lumens	LPW	CBCP	Beam Angle	CCT	CRI	M.O.L. (inches)	Diameter (inches)	Case Quantity	STK/MTO
PAR38														
LED17P38D24KFL	Dimmable 17W Smooth PAR38 - 2400K 40°	120	17	120	1200	70.6	2132	40	2400K	80	5.3	4.8	12	MTO
LED17P38D24KNFL	Dimmable 17W Smooth PAR38 - 2400K 25°	120	17	120	1200	70.6	4750	25	2400K	80	5.3	4.8	12	MTO
LED17P38D24KSP	Dimmable 17W Smooth PAR38 - 2400K 15°	120	17	90	1200	70.6	6937	15	2400K	80	5.3	4.8	12	MTO
LED17P38D27KFL	Dimmable 17W Smooth PAR38 - 2700K 40°	120	17	120	1200	70.6	2563	40	2700K	80	5.3	4.8	12	STK
LED17P38D27KNFL	Dimmable 17W Smooth PAR38 - 2700K 25°	120	17	120	1200	70.6	5710	25	2700K	80	5.3	4.8	12	STK
LED17P38D27KSP	Dimmable 17W Smooth PAR38 - 2700K 15°	120	17	90	1200	70.6	8338	15	2700K	80	5.3	4.8	12	MTO
LED17P38D30KFL	Dimmable 17W Smooth PAR38 - 3000K 40°	120	17	120	1250	73.5	3107	40	3000K	80	5.3	4.8	12	STK
LED17P38D30KNFL	Dimmable 17W Smooth PAR38 - 3000K 25°	120	17	120	1250	73.5	6130	25	3000K	80	5.3	4.8	12	STK
LED17P38D30KSP	Dimmable 17W Smooth PAR38 - 3000K 15°	120	17	90	1250	73.5	8658	15	3000K	80	5.3	4.8	12	MTO
LED17P38D35KFL	Dimmable 17W Smooth PAR38 - 3500K 40°	120	17	120	1275	75.0	3132	40	3500K	80	5.3	4.8	12	MTO
LED17P38D35KNFL	Dimmable 17W Smooth PAR38 - 3500K 25°	120	17	120	1275	75.0	7550	25	3500K	80	5.3	4.8	12	MTO
LED17P38D35KSP	Dimmable 17W Smooth PAR38 - 3500K 15°	120	17	90	1275	75.0	8771	15	3500K	80	5.3	4.8	12	MTO
LED17P38D41KFL	Dimmable 17W Smooth PAR38 - 4100K 40°	120	17	120	1300	76.5	3366	40	4100K	80	5.3	4.8	12	MTO
LED17P38D41KNFL	Dimmable 17W Smooth PAR38 - 4100K 25°	120	17	120	1300	76.5	7292	25	4100K	80	5.3	4.8	12	MTO
LED17P38D41KSP	Dimmable 17W Smooth PAR38 - 4100K 15°	120	17	90	1300	76.5	9947	15	4100K	80	5.3	4.8	12	MTO
LED17P38D50KFL	Dimmable 17W Smooth PAR38 - 5000K 40°	120	17	120	1300	76.5	3183	40	5000K	80	5.3	4.8	12	MTO
LED17P38D50KNFL	Dimmable 17W Smooth PAR38 - 5000K 25°	120	17	120	1300	76.5	7043	25	5000K	80	5.3	4.8	12	MTO
LED17P38D50KSP	Dimmable 17W Smooth PAR38 - 5000K 15°	120	17	90	1300	76.5	10989	15	5000K	80	5.3	4.8	12	MTO
LED14P38D24KFL	Dimmable 14W Smooth PAR38 - 2400K 40°	120	14	90	1050	75.0	2377	40	2400K	80	5.3	4.8	12	MTO
LED14P38D24KNFL	Dimmable 14W Smooth PAR38 - 2400K 25°	120	14	90	1050	75.0	4645	25	2400K	80	5.3	4.8	12	MTO
LED14P38D24KSP	Dimmable 14W Smooth PAR38 - 2400K 15°	120	14	90	1050	75.0	5806	15	2400K	80	5.3	4.8	12	MTO
LED14P38D27KFL	Dimmable 14W Smooth PAR38 - 2700K 40°	120	14	90	1050	75.0	2858	40	2700K	80	5.3	4.8	12	STK
LED14P38D27KNFL	Dimmable 14W Smooth PAR38 - 2700K 25°	120	14	90	1050	75.0	5583	25	2700K	80	5.3	4.8	12	STK
LED14P38D27KSP	Dimmable 14W Smooth PAR38 - 2700K 15°	120	14	90	1050	75.0	10949	15	2700K	80	5.3	4.8	12	MTO
LED14P38D30KFL	Dimmable 14W Smooth PAR38 - 3000K 40°	120	14	90	1100	78.6	2846	40	3000K	80	5.3	4.8	12	STK
LED14P38D30KNFL	Dimmable 14W Smooth PAR38 - 3000K 25°	120	14	90	1100	78.6	6721	25	3000K	80	5.3	4.8	12	STK
LED14P38D30KSP	Dimmable 14W Smooth PAR38 - 3000K 15°	120	14	90	1100	78.6	11300	15	3000K	80	5.3	4.8	12	MTO
LED14P38D35KFL	Dimmable 14W Smooth PAR38 - 3500K 40°	120	14	90	1125	80.4	3469	40	3500K	80	5.3	4.8	12	MTO
LED14P38D35KNFL	Dimmable 14W Smooth PAR38 - 3500K 25°	120	14	90	1125	80.4	6970	25	3500K	80	5.3	4.8	12	MTO
LED14P38D35KSP	Dimmable 14W Smooth PAR38 - 3500K 15°	120	14	90	1125	80.4	10098	15	3500K	80	5.3	4.8	12	MTO
LED14P38D41KFL	Dimmable 14W Smooth PAR38 - 4100K 40°	120	14	90	1150	82.1	2612	40	4100K	80	5.3	4.8	12	MTO
LED14P38D41KNFL	Dimmable 14W Smooth PAR38 - 4100K 25°	120	14	90	1150	82.1	4546	25	4100K	80	5.3	4.8	12	MTO
LED14P38D41KSP	Dimmable 14W Smooth PAR38 - 4100K 15°	120	14	90	1150	82.1	11718	15	4100K	80	5.3	4.8	12	MTO
LED14P38D50KFL	Dimmable 14W Smooth PAR38 - 5000K 40°	120	14	90	1150	82.1	4621	40	5000K	80	5.3	4.8	12	MTO
LED14P38D50KNFL	Dimmable 14W Smooth PAR38 - 5000K 25°	120	14	90	1150	82.1	7611	25	5000K	80	5.3	4.8	12	MTO
LED14P38D50KSP	Dimmable 14W Smooth PAR38 - 5000K 15°	120	14	90	1150	82.1	12147	15	5000K	80	5.3	4.8	12	MTO
PAR30														
LED14P30D24KFL	Dimmable 14W Smooth PAR30 - 2400K 40°	120	14	75	1050	75.0	2513	40	2400K	80	4.8	3.8	12	MTO
LED14P30D24KNFL	Dimmable 14W Smooth PAR30 - 2400K 25°	120	14	75	1050	75.0	4417	25	2400K	80	4.8	3.8	12	MTO
LED14P30D24KSP	Dimmable 14W Smooth PAR30 - 2400K 15°	120	14	75	1050	75.0	7515	15	2400K	80	4.8	3.8	12	MTO
LED14P30D27KFL	Dimmable 14W Smooth PAR30 - 2700K 40°	120	14	75	1050	75.0	3021	40	2700K	80	4.8	3.8	12	STK
LED14P30D27KNFL	Dimmable 14W Smooth PAR30 - 2700K 25°	120	14	75	1050	75.0	5310	25	2700K	80	4.8	3.8	12	STK
LED14P30D27KSP	Dimmable 14W Smooth PAR30 - 2700K 15°	120	14	75	1050	75.0	9033	15	2700K	80	4.8	3.8	12	MTO
LED14P30D30KFL	Dimmable 14W Smooth PAR30 - 3000K 40°	120	14	75	1100	78.6	2881	40	3000K	80	4.8	3.8	12	STK
LED14P30D30KNFL	Dimmable 14W Smooth PAR30 - 3000K 25°	120	14	75	1100	78.6	8169	25	3000K	80	4.8	3.8	12	STK
LED14P30D30KSP	Dimmable 14W Smooth PAR30 - 3000K 15°	120	14	75	1100	78.6	9328	15	3000K	80	4.8	3.8	12	MTO
LED14P30D35KFL	Dimmable 14W Smooth PAR30 - 3500K 40°	120	14	75	1125	80.4	3196	40	3500K	80	4.8	3.8	12	MTO
LED14P30D35KNFL	Dimmable 14W Smooth PAR30 - 3500K 25°	120	14	75	1125	80.4	6662	25	3500K	80	4.8	3.8	12	MTO
LED14P30D35KSP	Dimmable 14W Smooth PAR30 - 3500K 15°	120	14	75	1125	80.4	9529	15	3500K	80	4.8	3.8	12	MTO
LED14P30D41KFL	Dimmable 14W Smooth PAR30 - 4100K 40°	120	14	75	1150	82.1	3154	40	4100K	80	4.8	3.8	12	MTO
LED14P30D41KNFL	Dimmable 14W Smooth PAR30 - 4100K 25°	120	14	75	1150	82.1	6813	25	4100K	80	4.8	3.8	12	MTO
LED14P30D41KSP	Dimmable 14W Smooth PAR30 - 4100K 15°	120	14	75	1150	82.1	9681	15	4100K	80	4.8	3.8	12	MTO
LED14P30D50KFL	Dimmable 14W Smooth PAR30 - 5000K 40°	120	14	75	1150	82.1	3212	40	5000K	80	4.8	3.8	12	MTO
LED14P30D50KNFL	Dimmable 14W Smooth PAR30 - 5000K 25°	120	14	75	1150	82.1	5872	25	5000K	80	4.8	3.8	12	MTO
LED14P30D50KSP	Dimmable 14W Smooth PAR30 - 5000K 15°	120	14	75	1150	82.1	10043	15	5000K	80	4.8	3.8	12	MTO

PAR30 continued next page

c UL us 5 YEAR WARRANTY

For the most up-to-date specs, please visit www.tcpi.com

Item #	Description	Voltage	Wattage	Incandescent Wattage Comparison	Lumens	LPW	CBCP	Beam Angle	CCT	CRI	M.O.L. (inches)	Diameter (inches)	Case Quantity	STK/MTO
PAR30 continued														
LED12P30D24KFL	Dimmable 12W Smooth PAR30 - 2400K 40°	120	12	75	800	66.7	1600	40	2400K	80	4.8	3.8	12	MTO
LED12P30D24KNFL	Dimmable 12W Smooth PAR30 - 2400K 25°	120	12	75	800	66.7	4553	25	2400K	80	4.8	3.8	12	MTO
LED12P30D24KSP	Dimmable 12W Smooth PAR30 - 2400K 15°	120	12	75	800	66.7	6990	15	2400K	80	4.8	3.8	12	MTO
LED12P30D27KFL	Dimmable 12W Smooth PAR30 - 2700K 40°	120	12	75	850	70.8	1924	40	2700K	80	4.8	3.8	12	STK
LED12P30D27KNFL	Dimmable 12W Smooth PAR30 - 2700K 25°	120	12	75	850	70.8	5473	25	2700K	80	4.8	3.8	12	STK
LED12P30D27KSP	Dimmable 12W Smooth PAR30 - 2700K 15°	120	12	75	850	70.8	8402	15	2700K	80	4.8	3.8	12	MTO
LED12P30D30KFL	Dimmable 12W Smooth PAR30 - 3000K 40°	120	12	75	875	72.9	2596	40	3000K	80	4.8	3.8	12	STK
LED12P30D30KNFL	Dimmable 12W Smooth PAR30 - 3000K 25°	120	12	75	875	72.9	5523	25	3000K	80	4.8	3.8	12	STK
LED12P30D30KSP	Dimmable 12W Smooth PAR30 - 3000K 15°	120	12	75	875	72.9	8437	15	3000K	80	4.8	3.8	12	MTO
LED12P30D35KFL	Dimmable 12W Smooth PAR30 - 3500K 40°	120	12	75	900	75.0	2608	40	3500K	80	4.8	3.8	12	MTO
LED12P30D35KNFL	Dimmable 12W Smooth PAR30 - 3500K 25°	120	12	75	900	75.0	4060	25	3500K	80	4.8	3.8	12	MTO
LED12P30D35KSP	Dimmable 12W Smooth PAR30 - 3500K 15°	120	12	75	900	75.0	8956	15	3500K	80	4.8	3.8	12	MTO
LED12P30D41KFL	Dimmable 12W Smooth PAR30 - 4100K 40°	120	12	75	925	77.1	2759	40	4100K	80	4.8	3.8	12	MTO
LED12P30D41KNFL	Dimmable 12W Smooth PAR30 - 4100K 25°	120	12	75	925	77.1	6017	25	4100K	80	4.8	3.8	12	MTO
LED12P30D41KSP	Dimmable 12W Smooth PAR30 - 4100K 15°	120	12	75	925	77.1	7275	15	4100K	80	4.8	3.8	12	MTO
LED12P30D50KFL	Dimmable 12W Smooth PAR30 - 5000K 40°	120	12	75	950	79.2	2235	40	5000K	80	4.8	3.8	12	MTO
LED12P30D50KNFL	Dimmable 12W Smooth PAR30 - 5000K 25°	120	12	75	950	79.2	4088	25	5000K	80	4.8	3.8	12	MTO
LED12P30D50KSP	Dimmable 12W Smooth PAR30 - 5000K 15°	120	12	75	950	79.2	7375	15	5000K	80	4.8	3.8	12	MTO
PAR30SN														
LED12P30SD24KFL	Dimmable 12W Smooth PAR30 Short Neck - 2400K 40°	120	12	75	800	66.7	1881	40	2400K	80	3.5	3.8	12	MTO
LED12P30SD24KNFL	Dimmable 12W Smooth PAR30 Short Neck - 2400K 25°	120	12	75	800	66.7	3605	25	2400K	80	3.5	3.8	12	MTO
LED12P30SD24KSP	Dimmable 12W Smooth PAR30 Short Neck - 2400K 15°	120	12	75	800	66.7	6051	15	2400K	80	3.5	3.8	12	MTO
LED12P30SD27KFL	Dimmable 12W Smooth PAR30 Short Neck - 2700K 40°	120	12	75	850	70.8	2261	40	2700K	80	3.5	3.8	12	STK
LED12P30SD27KNFL	Dimmable 12W Smooth PAR30 Short Neck - 2700K 25°	120	12	75	850	70.8	4333	25	2700K	80	3.5	3.8	12	STK
LED12P30SD27KSP	Dimmable 12W Smooth PAR30 Short Neck - 2700K 15°	120	12	75	850	70.8	7274	15	2700K	80	3.5	3.8	12	MTO
LED12P30SD30KFL	Dimmable 12W Smooth PAR30 Short Neck - 3000K 40°	120	12	75	875	72.9	2349	40	3000K	80	3.5	3.8	12	STK
LED12P30SD30KNFL	Dimmable 12W Smooth PAR30 Short Neck - 3000K 25°	120	12	75	875	72.9	5630	25	3000K	80	3.5	3.8	12	STK
LED12P30SD30KSP	Dimmable 12W Smooth PAR30 Short Neck - 3000K 15°	120	12	75	875	72.9	7705	15	3000K	80	3.5	3.8	12	MTO
LED12P30SD35KFL	Dimmable 12W Smooth PAR30 Short Neck - 3500K 40°	120	12	75	900	75.0	2032	40	3500K	80	3.5	3.8	12	MTO
LED12P30SD35KNFL	Dimmable 12W Smooth PAR30 Short Neck - 3500K 25°	120	12	75	900	75.0	5832	25	3500K	80	3.5	3.8	12	MTO
LED12P30SD35KSP	Dimmable 12W Smooth PAR30 Short Neck - 3500K 15°	120	12	75	900	75.0	6914	15	3500K	80	3.5	3.8	12	MTO
LED12P30SD41KFL	Dimmable 12W Smooth PAR30 Short Neck - 4100K 40°	120	12	75	925	77.1	2235	40	4100K	80	3.5	3.8	12	MTO
LED12P30SD41KNFL	Dimmable 12W Smooth PAR30 Short Neck - 4100K 25°	120	12	75	925	77.1	7159	25	4100K	80	3.5	3.8	12	MTO
LED12P30SD41KSP	Dimmable 12W Smooth PAR30 Short Neck - 4100K 15°	120	12	75	925	77.1	7768	15	4100K	80	3.5	3.8	12	MTO
LED12P30SD50KFL	Dimmable 12W Smooth PAR30 Short Neck - 5000K 40°	120	12	75	950	79.2	2500	40	5000K	80	3.5	3.8	12	MTO
LED12P30SD50KNFL	Dimmable 12W Smooth PAR30 Short Neck - 5000K 25°	120	12	75	950	79.2	4792	25	5000K	80	3.5	3.8	12	MTO
LED12P30SD50KSP	Dimmable 12W Smooth PAR30 Short Neck - 5000K 15°	120	12	75	950	79.2	8045	15	5000K	80	3.5	3.8	12	MTO
LED10P30SD24KFL	Dimmable 10W Smooth PAR30 Short Neck - 2400K 40°	120	10	60	600	60.0	1713	40	2400K	80	3.5	3.8	12	MTO
LED10P30SD24KNFL	Dimmable 10W Smooth PAR30 Short Neck - 2400K 25°	120	10	60	600	60.0	3683	25	2400K	80	3.5	3.8	12	MTO
LED10P30SD24KSP	Dimmable 10W Smooth PAR30 Short Neck - 2400K 15°	120	10	60	600	60.0	6163	15	2400K	80	3.5	3.8	12	MTO
LED10P30SD27KFL	Dimmable 10W Smooth PAR30 Short Neck - 2700K 40°	120	10	60	700	70.0	2060	40	2700K	80	3.5	3.8	12	STK
LED10P30SD27KNFL	Dimmable 10W Smooth PAR30 Short Neck - 2700K 25°	120	10	60	700	70.0	4427	25	2700K	80	3.5	3.8	12	STK
LED10P30SD27KSP	Dimmable 10W Smooth PAR30 Short Neck - 2700K 15°	120	10	60	700	70.0	7408	15	2700K	80	3.5	3.8	12	MTO
LED10P30SD30KFL	Dimmable 10W Smooth PAR30 Short Neck - 3000K 40°	120	10	60	725	72.5	2173	40	3000K	80	3.5	3.8	12	STK
LED10P30SD30KNFL	Dimmable 10W Smooth PAR30 Short Neck - 3000K 25°	120	10	60	725	72.5	4799	25	3000K	80	3.5	3.8	12	STK
LED10P30SD30KSP	Dimmable 10W Smooth PAR30 Short Neck - 3000K 15°	120	10	60	725	72.5	8181	15	3000K	80	3.5	3.8	12	MTO
LED10P30SD35KFL	Dimmable 10W Smooth PAR30 Short Neck - 3500K 40°	120	10	60	750	75.0	2289	40	3500K	80	3.5	3.8	12	MTO
LED10P30SD35KNFL	Dimmable 10W Smooth PAR30 Short Neck - 3500K 25°	120	10	60	750	75.0	4927	25	3500K	80	3.5	3.8	12	MTO
LED10P30SD35KSP	Dimmable 10W Smooth PAR30 Short Neck - 3500K 15°	120	10	60	750	75.0	5912	15	3500K	80	3.5	3.8	12	MTO
LED10P30SD41KFL	Dimmable 10W Smooth PAR30 Short Neck - 4100K 40°	120	10	60	775	77.5	1894	40	4100K	80	3.5	3.8	12	MTO
LED10P30SD41KNFL	Dimmable 10W Smooth PAR30 Short Neck - 4100K 25°	120	10	60	775	77.5	5539	25	4100K	80	3.5	3.8	12	MTO
LED10P30SD41KSP	Dimmable 10W Smooth PAR30 Short Neck - 4100K 15°	120	10	60	775	77.5	7127	15	4100K	80	3.5	3.8	12	MTO
LED10P30SD50KFL	Dimmable 10W Smooth PAR30 Short Neck - 5000K 40°	120	10	60	800	80	2432	40	5000K	80	3.5	3.8	12	MTO
LED10P30SD50KNFL	Dimmable 10W Smooth PAR30 Short Neck - 5000K 25°	120	10	60	800	80	5844	25	5000K	80	3.5	3.8	12	MTO
LED10P30SD50KSP	Dimmable 10W Smooth PAR30 Short Neck - 5000K 15°	120	10	60	800	80	7717	15	5000K	80	3.5	3.8	12	MTO

PAR20 next page

c UL us 5 YEAR WARRANTY

For the most up-to-date specs, please visit www.tcpi.com

Smooth Uniform Dimming

Item #	Description	Voltage	Wattage	Incandescent Wattage Comparison	Lumens	LPW	CBCP	Beam Angle	CCT	CRI	M.O.L. (inches)	Diameter (inches)	Case Quantity	STK/MTO
PAR20														
LED10P20D24KFL	Dimmable 10W Smooth PAR20 - 2400K 40°	120	10	60	600	60.0	1163	40	2400K	80	3.5	2.5	12	MTO
LED10P20D24KNFL	Dimmable 10W Smooth PAR20 - 2400K 25°	120	10	60	600	60.0	2312	25	2400K	80	3.5	2.5	12	MTO
LED10P20D27KFL	Dimmable 10W Smooth PAR20 - 2700K 40°	120	10	60	600	60.0	1398	40	2700K	80	3.5	2.5	12	STK
LED10P20D27KNFL	Dimmable 10W Smooth PAR20 - 2700K 25°	120	10	60	600	60.0	2779	25	2700K	80	3.5	2.5	12	STK
LED10P20D30KFL	Dimmable 10W Smooth PAR20 - 3000K 40°	120	10	60	650	65.0	1364	40	3000K	80	3.5	2.5	12	STK
LED10P20D30KNFL	Dimmable 10W Smooth PAR20 - 3000K 25°	120	10	60	650	65.0	2865	25	3000K	80	3.5	2.5	12	STK
LED10P20D35KFL	Dimmable 10W Smooth PAR20 - 3500K 40°	120	10	60	675	67.5	1470	40	3500K	80	3.5	2.5	12	MTO
LED10P20D35KNFL	Dimmable 10W Smooth PAR20 - 3500K 25°	120	10	60	675	67.5	2923	25	3500K	80	3.5	2.5	12	MTO
LED10P20D41KFL	Dimmable 10W Smooth PAR20 - 4100K 40°	120	10	60	700	70.0	1493	40	4100K	80	3.5	2.5	12	MTO
LED10P20D41KNFL	Dimmable 10W Smooth PAR20 - 4100K 25°	120	10	60	700	70.0	2967	25	4100K	80	3.5	2.5	12	MTO
LED10P20D50KFL	Dimmable 10W Smooth PAR20 - 5000K 40°	120	10	60	725	72.5	1546	40	5000K	80	3.5	2.5	12	MTO
LED10P20D50KNFL	Dimmable 10W Smooth PAR20 - 5000K 25°	120	10	60	725	72.5	3073	25	5000K	80	3.5	2.5	12	MTO
LED8P20D24KFL	Dimmable 8W Smooth PAR20 - 2400K 40°	120	8	50	500	62.5	1006	40	2400K	80	3.5	2.5	12	MTO
LED8P20D24KNFL	Dimmable 8W Smooth PAR20 - 2400K 25°	120	8	50	500	62.5	1943	25	2400K	80	3.5	2.5	12	MTO
LED8P20D27KFL	Dimmable 8W Smooth PAR20 - 2700K 40°	120	8	50	575	71.9	1210	40	2700K	80	3.5	2.5	12	STK
LED8P20D27KNFL	Dimmable 8W Smooth PAR20 - 2700K 25°	120	8	50	575	71.9	2336	25	2700K	80	3.5	2.5	12	STK
LED8P20D30KFL	Dimmable 8W Smooth PAR20 - 3000K 40°	120	8	50	600	75.0	1416	40	3000K	80	3.5	2.5	12	STK
LED8P20D30KNFL	Dimmable 8W Smooth PAR20 - 3000K 25°	120	8	50	600	75.0	2463	25	3000K	80	3.5	2.5	12	STK
LED8P20D35KFL	Dimmable 8W Smooth PAR20 - 3500K 40°	120	8	50	625	78.1	1308	40	3500K	80	3.5	2.5	12	MTO
LED8P20D35KNFL	Dimmable 8W Smooth PAR20 - 3500K 25°	120	8	50	625	78.1	1974	25	3500K	80	3.5	2.5	12	MTO
LED8P20D41KFL	Dimmable 8W Smooth PAR20 - 4100K 40°	120	8	50	650	81.2	1327	40	4100K	80	3.5	2.5	12	MTO
LED8P20D41KNFL	Dimmable 8W Smooth PAR20 - 4100K 25°	120	8	50	650	81.2	2291	25	4100K	80	3.5	2.5	12	MTO
LED8P20D50KFL	Dimmable 8W Smooth PAR20 - 5000K 40°	120	8	50	650	81.2	1501	40	5000K	80	3.5	2.5	12	MTO
LED8P20D50KNFL	Dimmable 8W Smooth PAR20 - 5000K 25°	120	8	50	650	81.2	2059	25	5000K	80	3.5	2.5	12	MTO

c UL us 5 YEAR WARRANTY

For the most up-to-date specs, please visit www.tcpi.com

©TCP DEC 2016/WF31503d

ENERGY STAR PARTNER

CREATING BEAUTY

TCP has a **20-year history in energy-efficient lighting.** Thanks to our **cutting edge technology** and manufacturing expertise, we have shipped billions of high quality lamps. Our **integrated technology** and **manufacturing** provides **expedited time-to-market.** With TCP, you can count on unique lighting products designed to meet very specific needs—lighting that transforms your surroundings and envelopes you in warmth—**lighting that generates beauty** with every flip of the switch.

LED

For more information on the quality and care TCP can deliver, call us at 800.324.1496 or visit tcpi.com

325 Campus Dr. | Aurora, Ohio 44202 | P: 800.324.1496 | F: 877.487.0516

UCRM 2: POWER CONDITIONING

DRAFT

This document contains Performance Services Trade Secrets and Confidential information to be used by the addressee for evaluating the PSI proposal.
Addressee shall not disclose the Confidential information to third parties without written consent of Performance Services.

Powergy™

CLEAN POWER SYSTEMS

Clean, Safe, Efficient Power

- Suppresses surges and spikes
- Helps with brownouts
- Filters noise generated by switching power electronics

- Eliminates drastic voltage fluctuation
- Improves power factor and reduces system losses

Powerful Benefits

more hours of productive operation

- Significantly extends equipment life and performance by reducing machine downtime
- Prevents premature equipment replacement and maintenance
- Reduces demand and energy costs

Proven Applications

anywhere clean power is required

- EDM and Laser Systems
- CNC Machines
- AC Motors
- Water and Wastewater Treatment Plants (Pumps)
- Restaurants, Supermarkets, Convenience Stores and other light Commercial applications

"Power management" isn't some trendy new, heavy-handed management style. It's the strategic and successful management of incoming electrical power. Insuring power quality is just as important to successful EDM operations...because it prevents very expensive maintenance.

- E. Bud Guitrau, EDM Today, September/ October, 2005

(Powergy) CPS is designed to eliminate unwanted bumps and spikes, and protect against voltage "transients", generally smoothing out the power, while also adjusting the phase of power to help inductive load machinery run more efficiently.

- FEMP, US Department of Energy, September 1998

c UL us LISTED

MADE IN THE USA

For more information or to locate an authorized distributor near you call 1-888-876-9374 or Visit www.powergy.com

195 Frances Avenue. Cranston, Rhode Island 02910 1-888-8-POWERGY WWW.POWERGY.COM

SPECIFICATIONS					
Model	CPS-3Y208/240	CPS-3D208/240	CPS-3D380	CPS-3D480	CPS-3D600
Voltage (Vac)	208/240	208/240	380	480	600
Phase Configuration	3 Φ Wye	3 Φ Delta	3 Φ Delta	3 Φ Delta	3 Φ Delta
Frequency (Hz)	50 ~ 60	50 ~ 60	50 ~ 60	50 ~ 60	50 ~ 60
Energy Absorption (J) (2 ms current wave)	3300	3300	5460	5760	6600
Surge Current (A) (8/20 µs current wave)	40K	40K	40K	40K	40K
Max. Clamping Voltage (V) (@ 300 A, 8/20 µs current wave)	710	710	1120	1500	1815
Line Wires (AWG)	10	10	8	8	6
Circuit Breakers (A)	30	30	40	40	50
Dimensions (WxDxH)	12" x 12" x 6"	12" x 12" x 6"	12" x 14" x 8"	12" x 14" x 8"	12" x 14" x 8"
Weight (lbs)	26	26	38	38	48

Easy Installation

- Simple, NEMA 12 enclosure, factory sealed, easily installed in under an hour
- Connect in parallel to AC power systems
- For whole facility protection, install at main power panel
- For point-of-use protection, install at the sub-panel upstream of equipment
- Use readily available industry-standard circuit breaker or fuse disconnect
- Maintenance free

Powergy™ has since 1995 established a track record of boosting electrical efficiency for a broad spectrum of commercial and residential applications.

Powerful Company - Thielsch Engineering manufactures the Powergy™ Clean Power Systems. Powergy™ is available through a select network of electrical equipment distributors.

Call Thielsch Engineering for more information or to locate an authorized reseller near you.

The **Powergy**™ Clean Power Systems is designed to protect against unwanted bumps, spikes, and transients by cleansing the power and adjusting the phases helping your equipment run smoother and more efficiently.

Powergy™
CLEAN POWER SYSTEMS

INSTALLATION GUIDE

For EDM Machine Tools

Model CPS-3Y208/240 & CPS-3D208/240

WARNING:

- Opening the Powergy CPS without prior permission from Thielsch, will void its warranty coverage.
- Apply the CPS only to 3-phase, 208 or 240Vac, 50/60Hz, Wye or Delta power systems.
- The CPS must be mounted vertically, in a dry location, using the four mounting holes.
- The CPS must be installed by a licensed electrician, in compliance with national and local codes.
- **IMPORTANT**: THIS UNIT MUST BE CONNECTED DIRECTLY TO A DEDICATED CIRCUIT BREAKER. DO NOT, UNDER ANY CIRCUMSTANCES, HARD-WIRE INSTALL WITHOUT A DEDICATED BREAKER.

YOU WILL NEED:

1. A circuit breaker box with a 3-pole 30 Amp circuit breaker;
   OR
   A fuse disconnect box with three 30 Amp fuses.
   NOTE: Above items can be conveniently purchased through Thielsch.
2. Appropriate tools, wires and conduits.
3. A licensed electrician who is well versed with the national and local electrical codes.

MOUNTING THE DEVICES:

1. Inspect the exterior of the CPS to ensure that it has not been damaged in transit. Ensure that the front label/overlay is still intact, that the warranty seals are intact, and that the cables protruding from the unit have not been damaged.
2. Locate the EDM/Laser machine breaker. Identify sufficient space near the machine breaker to locate the breaker box/fuse disconnect and the CPS.
3. Ensure that the CPS is on a clear and dry wall.
4. Mount the breaker box/fuse disconnect and the CPS. When mounted, the phase indication lights should be visible.

MOUNTING HOLES POSITION:

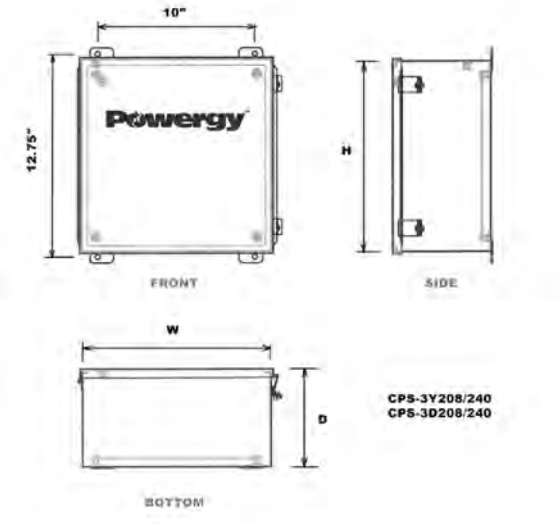

INSTALL PROCEDURES:

1. If possible, de-energize the power panel/breaker box/fuse disconnect prior to connecting all the devices.
2. According to the CODES, run wires and conduit between the machine breaker (line side) and the breaker box/fuse disconnect. Run conduit between the breaker box/fuse disconnect and the CPS. Feed the wires from the CPS through the conduit into the breaker box/fuse disconnect.
3. DO NOT UNDER ANY CONDITIONS SPLICE NEW CABLE ONTO THE CPS, OR OPEN THE CPS, TO EXTEND THE LENGTH OF THE CABLE PROVIDED.

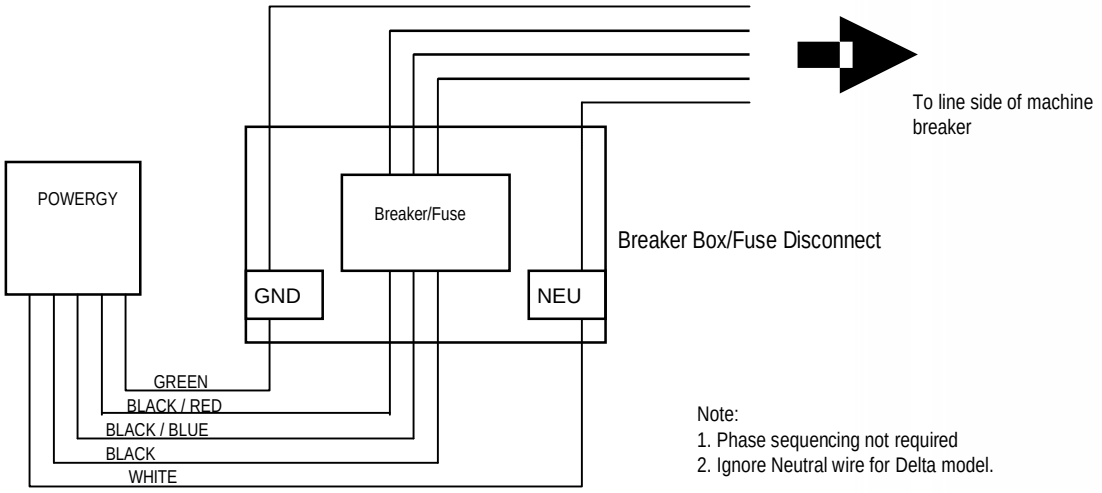

TEST PROCEDURES:

1. Double check if all connections are correct.
2. If so, close the circuit breaker or fuse disconnect.
3. Check if all three lights on the CPS are on:
   YES - Proceed to next step.
   NO - De-energize the CPS and check if cables are correctly connected. Check the ground cable connection. If problem persists, call the distributor or Thielsch for technical assistance.
4. Use a clamp-on Ammeter to check if all line currents are about 14A (+/- 1A). Contact the distributor or Thielsch if the current reading is different.
6. Put this installation guide near the unit, for future use.

WARRANTY:

- Remember to fill and mail out the Warranty Registration Card within 10 days of installation.
- Powergy Clean Power Systems provide the original purchaser a 3-year limited product warranty. Refer to the product warranty sheet for more details.

THIELSCH ENGINEERING
195 FRANCES AVE.
CRANSTON, RI 02910
1-888-8-POWERGY
WWW.POWERGY.COM

UCRM 3: SOLAR PV

DRAFT

This document contains Performance Services Trade Secrets and Confidential information to be used by the addressee for evaluating the PSI proposal.
Addressee shall not disclose the Confidential information to third parties without written consent of Performance Services.

MECHANICAL SPECIFICATION

Format	78.5 in × 39.4 in × 1.38 in (including frame) (1994 mm × 1000 mm × 35 mm)
Weight	52.9 lb (24 kg)
Front Cover	0.13 in (3.2 mm) thermally pre-stressed glass with anti-reflection technology
Back Cover	Composite film
Frame	Anodised aluminum
Cell	6 × 12 Q.ANTUM solar cells
Junction box	3.35-4.37 in × 2.36-3.15 in × 0.59-0.75 in (85-111 × 60-80 × 15-19 mm), Protection class ≥ IP67, with bypass diodes
Cable	4 mm² Solar cable; (+) ≥ 47.24 in (1200 mm), (-) ≥ 47.24 in (1200 mm)
Connector	Amphenol UTX, IP68

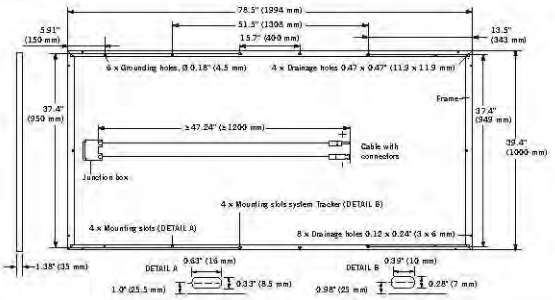

ELECTRICAL CHARACTERISTICS

POWER CLASS				325	330	335	340	345
MINIMUM PERFORMANCE AT STANDARD TEST CONDITIONS, STC[1] (POWER TOLERANCE +5 W / -0 W)								
Minimum	Power at MPP[2]	P_{MPP}	[W]	325	330	335	340	345
	Short Circuit Current*	I_{SC}	[A]	9.44	9.49	9.54	9.59	9.64
	Open Circuit Voltage*	V_{OC}	[V]	46.30	46.55	46.81	47.07	47.32
	Current at MPP*	I_{MPP}	[A]	8.85	8.91	8.97	9.03	9.09
	Voltage at MPP*	V_{MPP}	[V]	36.70	37.02	37.33	37.63	37.93
	Efficiency[2]	η	[%]	≥16.3	≥16.5	≥16.8	≥17.1	≥17.3
MINIMUM PERFORMANCE AT NORMAL OPERATING CONDITIONS, NOC[3]								
Minimum	Power at MPP[2]	P_{MPP}	[W]	241.0	244.7	248.4	252.1	255.8
	Short Circuit Current*	I_{SC}	[A]	7.61	7.65	7.69	7.73	7.77
	Open Circuit Voltage*	V_{OC}	[V]	43.20	43.44	43.68	43.92	44.16
	Current at MPP*	I_{MPP}	[A]	6.94	6.99	7.04	7.09	7.14
	Voltage at MPP*	V_{MPP}	[V]	34.72	35.01	35.29	35.56	35.83

[1] 1000 W/m², 25 °C, spectrum AM 1.5 G [2] Measurement tolerances STC ± 3%; NOC ± 5% [3] 800 W/m², NOCT, spectrum AM 1.5 G * typical values, actual values may differ

Q CELLS PERFORMANCE WARRANTY

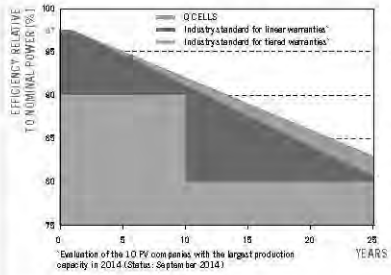

At least 97% of nominal power during first year. Thereafter max. 0.6% degradation per year.
At least 92% of nominal power up to 10 years.
At least 83% of nominal power up to 25 years.

All data within measurement tolerances. Full warranties in accordance with the warranty terms of the Q CELLS sales organization of your respective country.

PERFORMANCE AT LOW IRRADIANCE

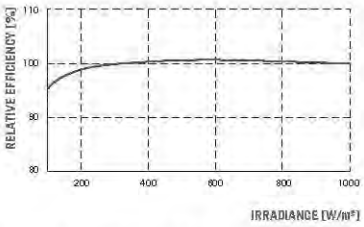

Typical module performance under low irradiance conditions in comparison to STC conditions (25 °C, 1000 W/m²).

TEMPERATURE COEFFICIENTS

Temperature Coefficient of I_{SC}	α	[%/K]	+0.04	Temperature Coefficient of V_{OC}	β	[%/K]	−0.29
Temperature Coefficient of P_{MPP}	γ	[%/K]	−0.40	Normal Operating Cell Temperature	NOCT	[°F]	113 ± 5.4 (45 ± 3 °C)

PROPERTIES FOR SYSTEM DESIGN

Maximum System Voltage V_{SYS}	[V]	1500 (IEC) / 1500 (UL)	Safety Class	II
Maximum Series Fuse Rating	[A DC]	15	Fire Rating	C (IEC) / TYPE 1 (UL)
Design load, push (UL)[2]	[lbs/ft²]	75 (3600 Pa)	Permitted module temperature on continuous duty	-40 °F up to +185 °F (-40 °C up to +85 °C)
Design load, pull (UL)[2]	[lbs/ft²]	33 (1600 Pa)	[2] safety factor of 1.5 included, see installation manual	

QUALIFICATIONS AND CERTIFICATES

IEC 61215 (Ed. 2); IEC 61730 (Ed. 1), Application class A
This data sheet complies with DIN EN 50380.

PACKAGING INFORMATION

Number of Modules per Pallet	29
Number of Pallets per 53' Container	30
Number of Pallets per 40' Container	22
Pallet Dimensions (L × W × H)	81.3 × 45.3 × 46.9 in (2065 × 1150 × 1190 mm)
Pallet Weight	1671 lbs (758 kg)

NOTE: Installation instructions must be followed. See the installation and operating manual or contact our technical service department for further information on approved installation and use of this product.

Hanwha Q CELLS America Inc.
300 Spectrum Center Drive, Suite 1250, Irvine, CA 92618, USA | TEL +1 949 748 59 96 | EMAIL inquiry@us.q-cells.com | WEB www.q-cells.us

Specifications subject to technical changes © Hanwha Q CELLS Q.PLUS L-G4.2_325-345_2016-07_Rev01_NA

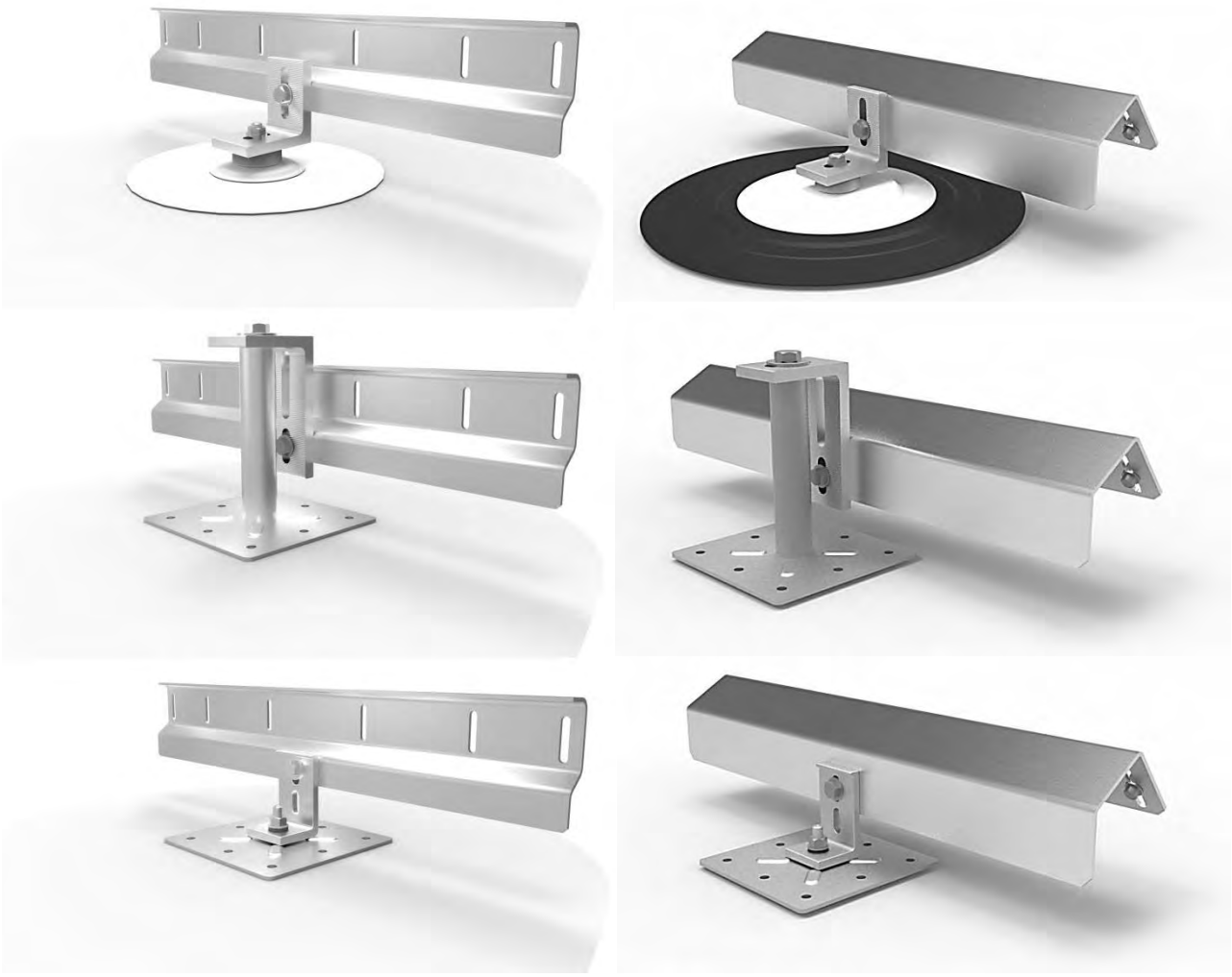

Polar Bear® III HD

Mechanical Attachment Bracket Installation Manual

Document Number 9910031 Rev C
September 2016

Revision History

Rev	ECO #	Date	Description of Changes	Approved By
A	C00385	29AUG14	Initial Released	CA
B	C00422	08SEP15	Add installation instruction for 5 Degree Mechanical Attachment Bracket	CN
C	C00457	12SEP16	Add installation instruction for 10 Degree South Tray Mechanical Attachment	

Table of Contents

Revision History 2
Table of Contents 3
Introduction 4
Safety Overview 4
Parts and Hardware 5
Required Tools 5
5 Degree Mechanical Attachment location and Mechanical Attachment Bracket Installation 6
Step 1: Position the Mechanical Attachment 6
Step 2: Install the Mechanical Attachment 7
Step 3: Secure the Mechanical Attachment Bracket 7
10 Degree Mechanical Attachment location and Mechanical Attachment Bracket Installation 10
Step 1: Position the Mechanical Attachment 10
Step 2: Install the Mechanical Attachment 11
Step 3: Secure the Mechanical Attachment Bracket 11
10 Degree South Support Mechanical Attachment location and Mechanical Attachment Installation 13
Step 1: Position the Mechanical Attachment 13
Step 2: Install the Mechanical Attachment 14
Step 3: Connect the Mechanical Attachment to the Ballast Tray 14
Appendix A: Safety 15

Introduction

The PanelClaw Mechanical Attachment Bracket is an option for PanelClaw's Polar Bear® III HD flat roof photovoltaic mounting systems. The PanelClaw Mechanical Attachment Bracket is designed to enable installers to seamlessly connect EcoFasten Solar®, OMG® Roofing Products and Anchor Products™ Mechanical Attachments to PanelClaw's Polar Bear III HD system. This installation manual demonstrates the proper connection of EcoFasten, OMG and Anchor products to Polar Bear III HD components.

"THIS INSTALLATION MANUAL DOES NOT COVER SELECTION OF OR INSTALLATION OF ANY MATERIALS USED TO SEAL A MECHANICAL ATTACHMENT TO THE ROOF. FOR THESE INSTRUCTIONS PLEASE SEE OEM PROVIDER INSTALLATION MANUALS AND RELATED LITERATURE. A LIST OF OEM PROVIDERS IS SHOWN BELOW.
THIS INSTALLATION MANUAL DOES NOT COVER SELECTION OF OR INSTALLATION OF FASTENERS REQUIRED TO FASTEN A MECHANICAL ATTACHMENT TO THE ROOF STRUCTURE ITSELF. FOR THESE INSTRUCTIONS, PLEASE SEE OEM PROVIDERS INSTALLATION MANUALS AND RELATED LITERATURE. A LIST OF OEM PROVIDERS IS SHOWN BELOW"

OEM MECHANICAL ATTACHMENT PROVIDERS:

- Anchor Products: www.anchorp.com
- OMG Roofing Products: www.omgroofing.com
- ECOFasten Solar: www.ecofastensolar.com

Safety Overview

Safety is an essential part of every photovoltaic (PV) installation and every construction site. It is imperative to plan ahead for any safety concerns and hazards to promote safe work practices during installation. This section does not claim to address or Support all safety concerns that may arise during the installation of PanelClaw mounting systems or any other aspect of the work being performed. Before beginning work, installers should refer to all local and federal safety, health, and regulatory requirements to assure compliance. Refer to OSHA Part 1926 and its related Subparts for federal construction related regulations and standards.

The section in **Appendix A: Safety** outlines some of the obvious / major hazards that could exist during the installation of PanelClaw products, and are divided to bring a level of clarity to such hazards. Some sections do not apply to all PanelClaw product lines and such exclusions are noted within each section.

PRIOR TO INSTALLATION, READ THE SAFETY PROVISIONS ATTACHED IN **APPENDIX A** AND REVIEW THE INSTALLATION MANUAL IN ITS ENTIRETY.

Parts and Hardware

Major Components

❶ Mechanical Attachment Bracket

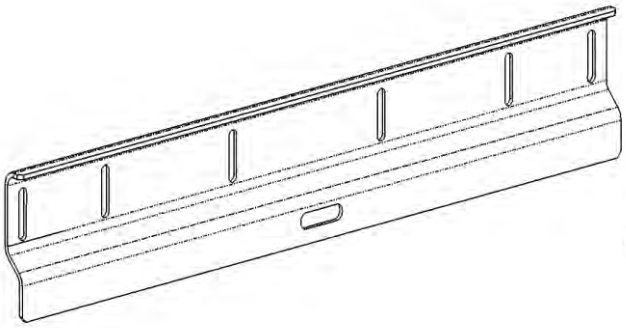

Mechanical Attachment Bracket
for 5° PanelClaw system

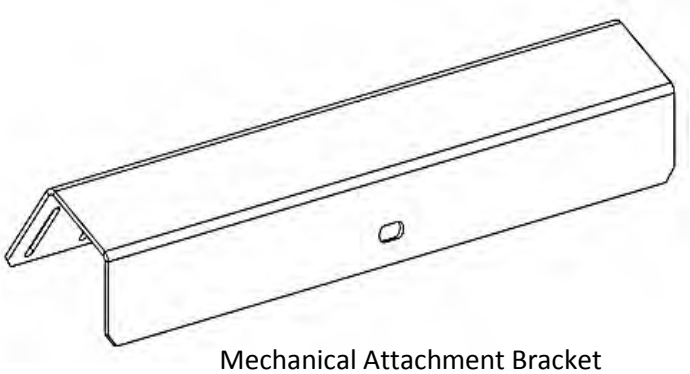

Mechanical Attachment Bracket
for 10° PanelClaw system

Hardware Kits

❷ Fastener Kit

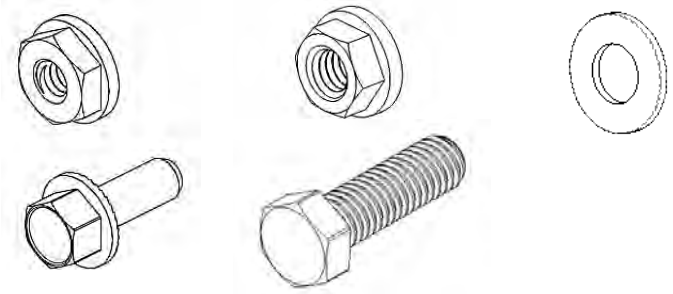

Parts and Hardware

❶	**Mechanical Attachment Bracket**	Universal bracket connecting the Mechanical Attachment to the Ballast Tray
❷	**Hardware**	Serrated flange nuts 1/4-20 Stainless Steel 18-8 Hex head cap screw 1/4-20 x 0.75” Stainless Steel 18-8 Flange nuts 3/8-16 Stainless Steel 304 Hex head bolt 3/8-16 x 1.25” Stainless Steel 304 Flat Washer 3/8 Stainless Steel 304

Required Tools

- 3/8” drive torque wrench (settings available up to 30 ft-lbs)
- 3/8” deep socket (bolts) and wrench
- 1/2” deep socket (bolts) and wrench

5 Degree Mechanical Attachment location and Mechanical Attachment Bracket Installation

Step 1: Position the Mechanical Attachment

1. Consult the provided Racking Construction Set Drawing for the locations of the Mechanical Attachments that need to be installed. Once the modules and Supports are installed you can locate the Mechanical Attachments. Ballast Trays and modules may need to be removed if they are already installed.
2. The Mechanical Attachments are installed underneath modules and connect to the side of the Ballast Trays via the Mechanical Attachment Bracket.
3. Center the Mechanical Attachments on the Ballast Tray requiring the attachment (east to west). **NOTE: If no suitable slots are available at the center of the Ballast Tray, the Mechanical Attachment can be located at the next available slots closest to the center of the gap between adjacent modules.**
4. See below for Mechanical Attachment locations from the Support edge (Figure 1, 2). **NOTE: OMG and Anchor Products are interchangeable for the instructions below.**

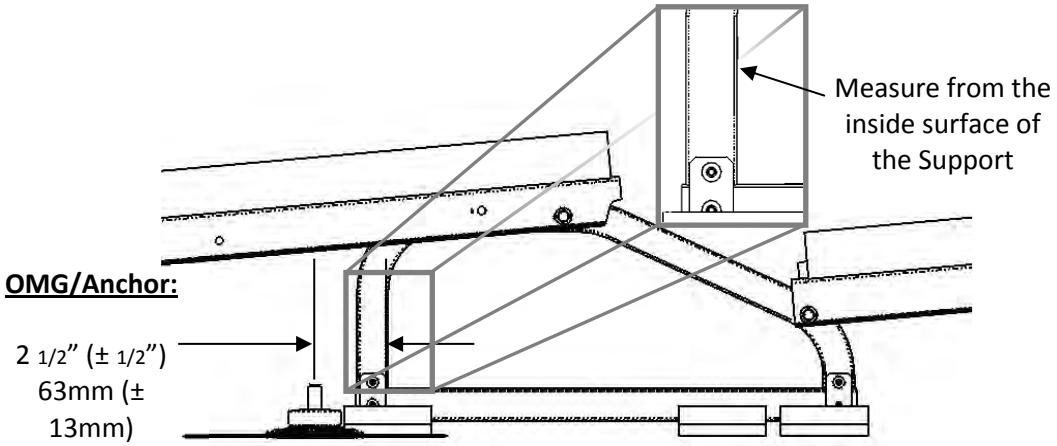

Figure 1 OMG/Anchor Products: Distance from Support surface to center of Mechanical Attachment

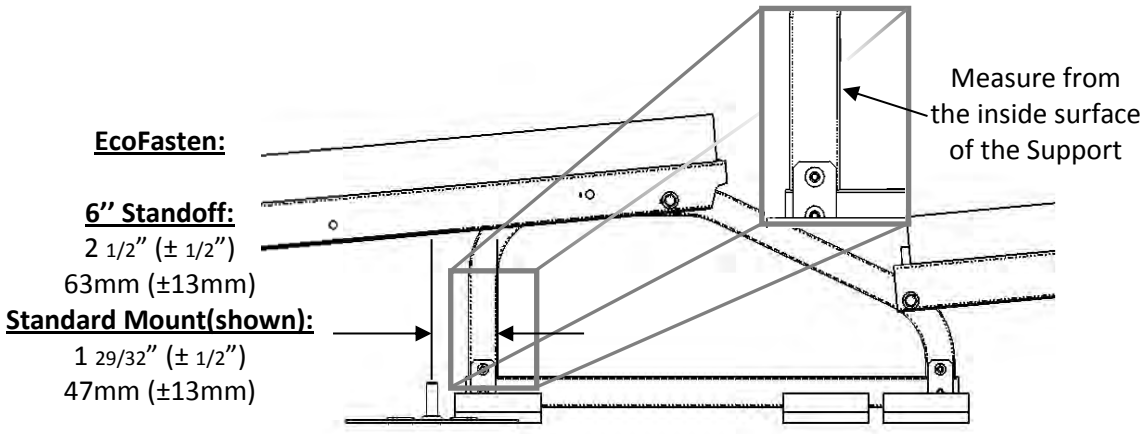

Figure 2 EcoFasten Product: Distance from Support surface to center of Mechanical Attachment

5 Degree Mechanical Attachment location and Mechanical Attachment Bracket Installation

Step 2: Install the Mechanical Attachment

1. Install the Mechanical Attachment once it has been placed appropriately. Consult the manufacturer's installation instructions and specifications regarding the proper installation and flashing of the Mechanical Attachment.

Step 3: Secure the Mechanical Attachment Bracket

1. Once the Mechanical Attachment is installed you can complete the rest of the Mechanical Attachment assembly. Attach the L-Brackets/Standoffs to the threaded stud on the Mechanical Attachment. Finger-tighten for now. (Figure 3, 4)
2. With the Mechanical Attachment shown as in the figures below, attach the Mechanical Attachment Bracket to the L-Bracket. Finger-tighten the hardware for now. (Figure 3, 4)

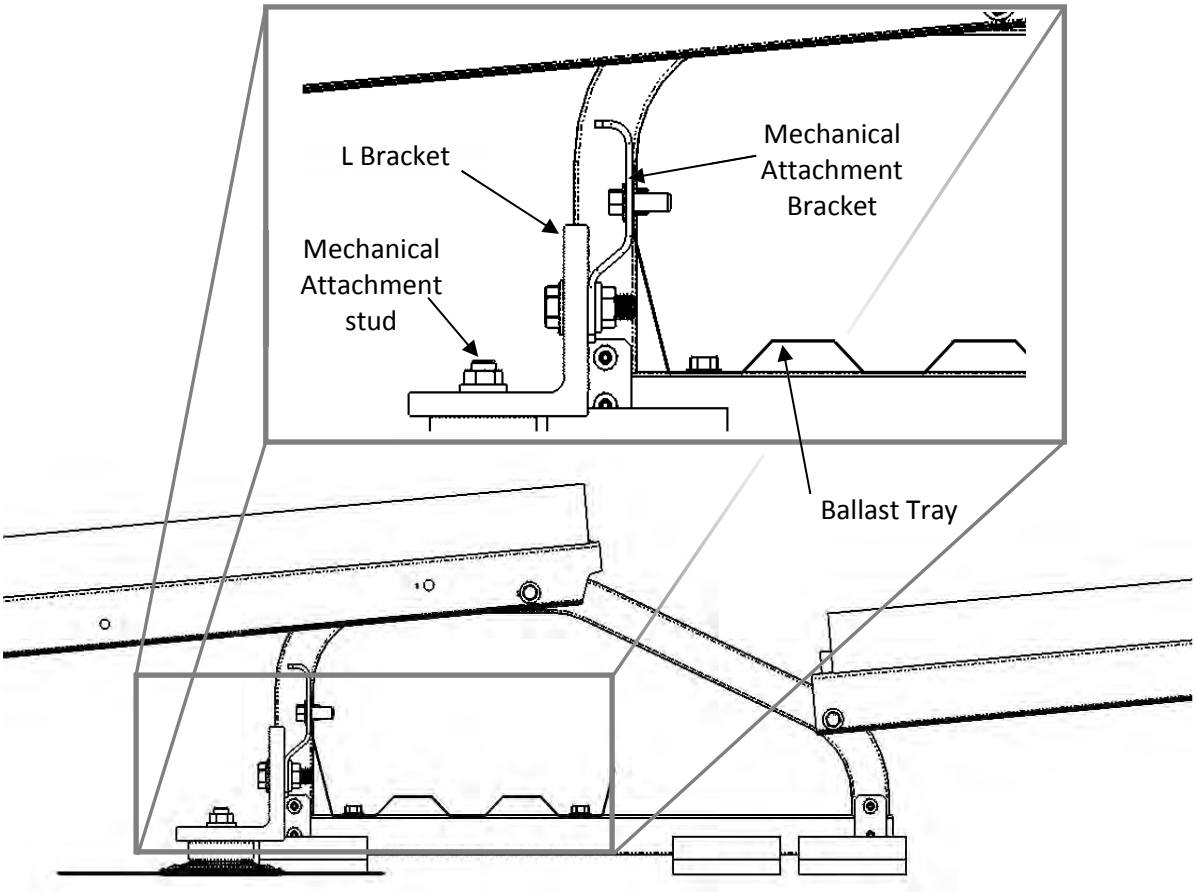

Figure 3 OMG/Anchor Products: Attach the L-Brackets to the threaded stud on the Mechanical Attachment

5 Degree Mechanical Attachment location and Mechanical Attachment Bracket Installation

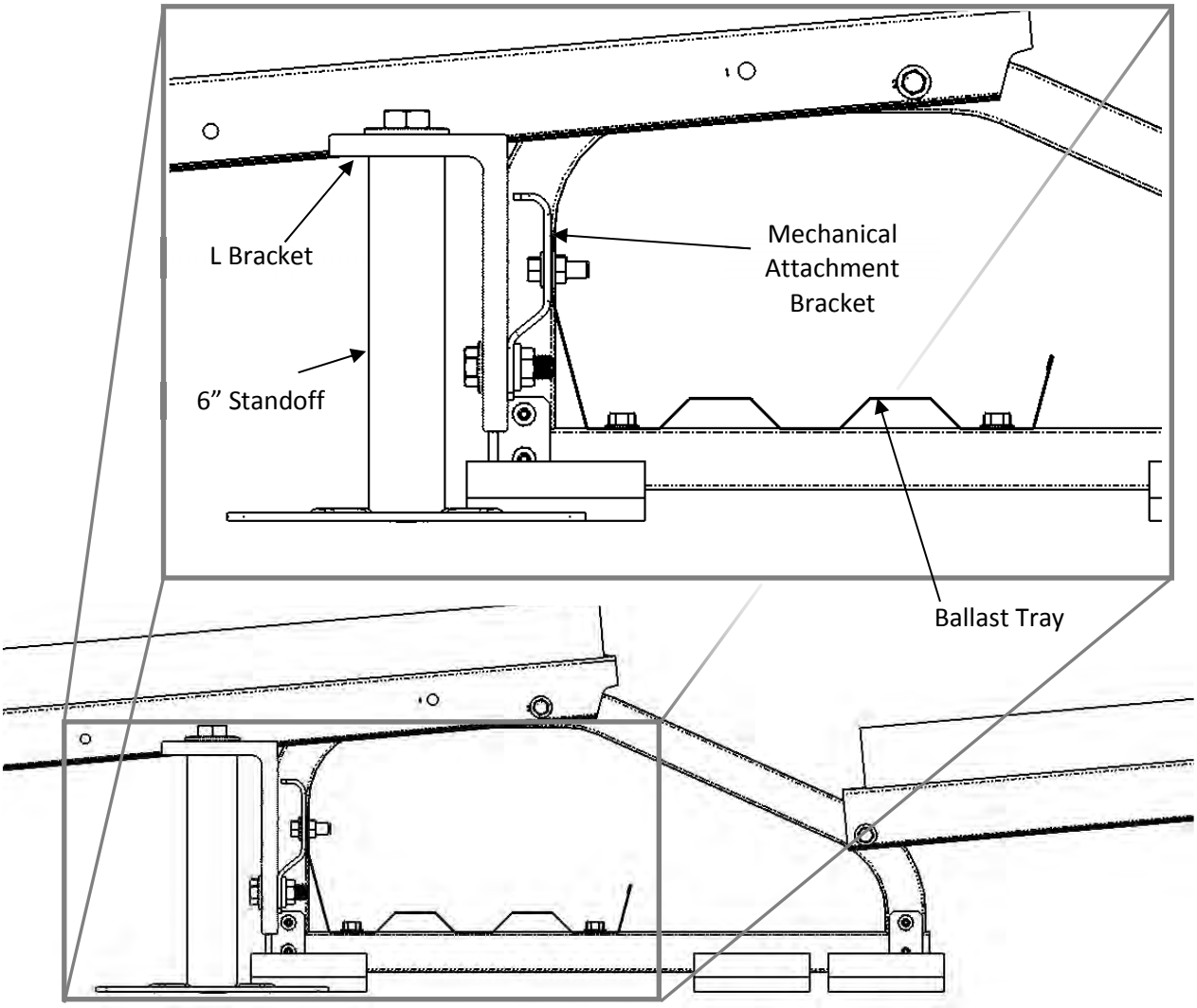

Figure 4 Ecofasten Product: Attach the standoff and L-Brackets to the threaded stud on the Mechanical Attachment

5 Degree Mechanical Attachment location and Mechanical Attachment Bracket Installation

3. Install the Ballast Tray and locate the Mechanical Attachment Bracket so that it aligns with the inner slots of the Ballast Tray. Using the two ¼-20 x 0.75" serrated flange bolts and ¼-20 serrated flange nuts connect the Ballast Tray and Mechanical Attachment Bracket. Torque to 8 ft-lbs. (Figure 5)
4. Torque the remaining components:
   L-Bracket to Mechanical Attachment to 30 ft-lbs;
   L-Bracket to Mechanical Attachment Stud per Manufactures installation instructions. (Figure 5)

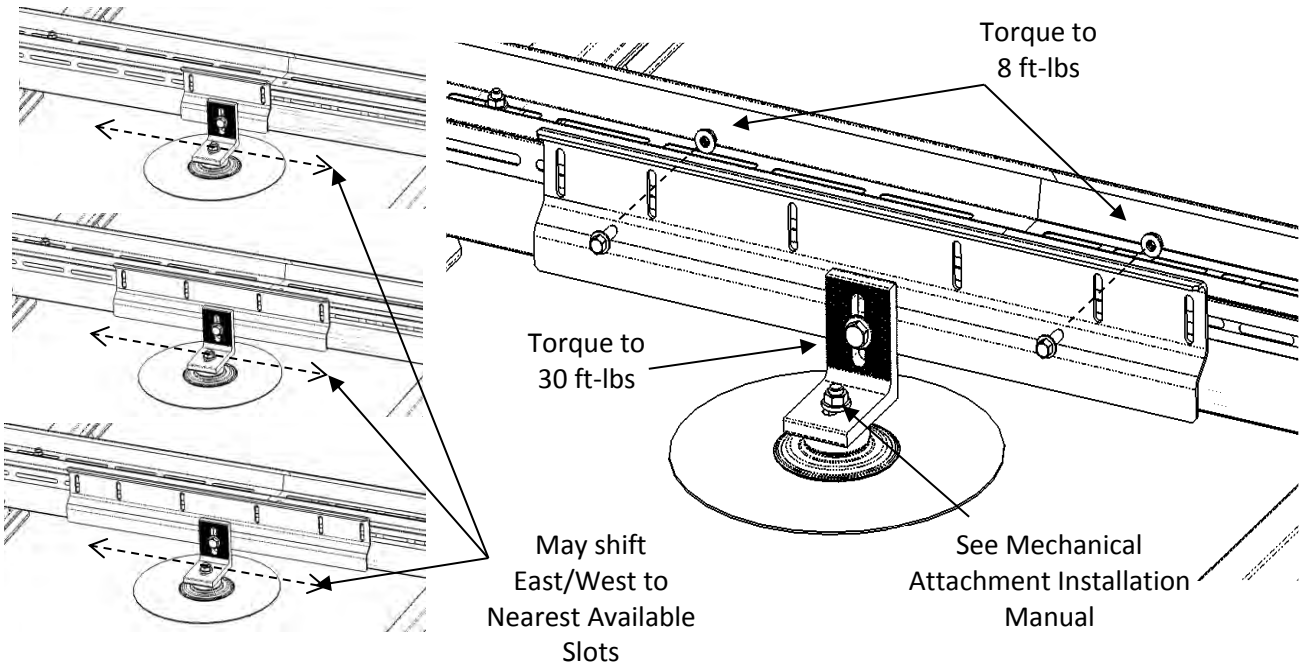

Figure 5 Secure the Mechanical Attachment Bracket with 2 nuts and bolts using slots that align with Ballast Tray

10 Degree Mechanical Attachment location and Mechanical Attachment Bracket Installation

Step 1: Position the Mechanical Attachment

1. Consult the provided Racking Construction Set Drawing for the locations of the Mechanical Attachments that need to be installed. Once the module and Supports are installed you can locate the Mechanical Attachment. Ballast Trays will need to be removed if they are already installed.
2. The Mechanical Attachments are installed north of modules and connect to the underside of the Ballast Trays via the Mechanical Attachment Bracket.
3. Center the Mechanical Attachments between two adjacent modules (east to west).
4. See below for Mechanical Attachment locations from the module edge (Figure 6, 7).
   NOTE: OMG and Anchor Products are interchangeable for the instructions below.

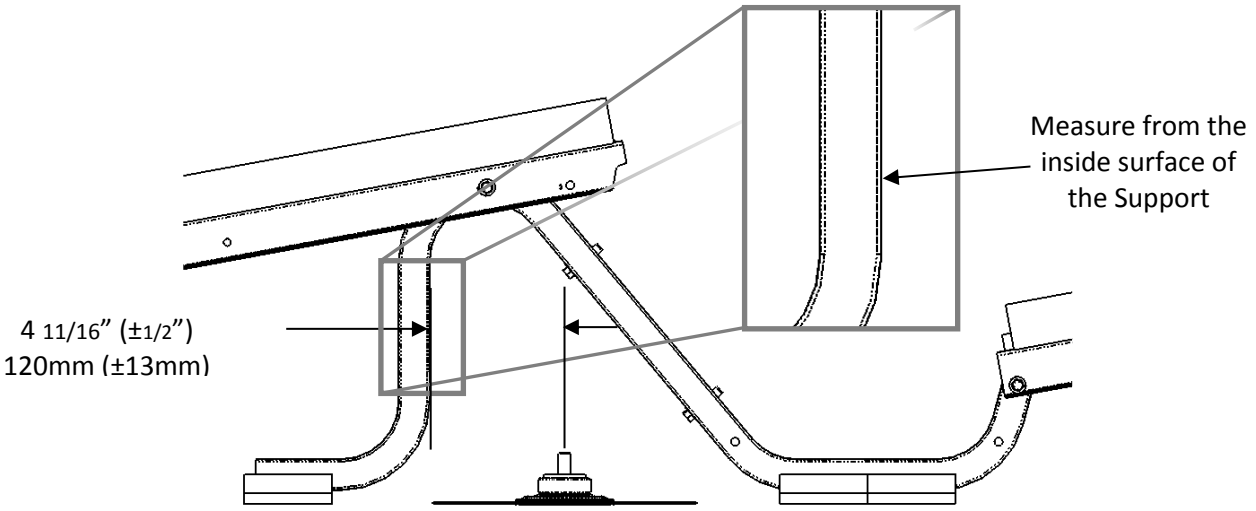

Figure 6 OMG/Anchor Product: Distance from Support surface to center of Mechanical Attachment

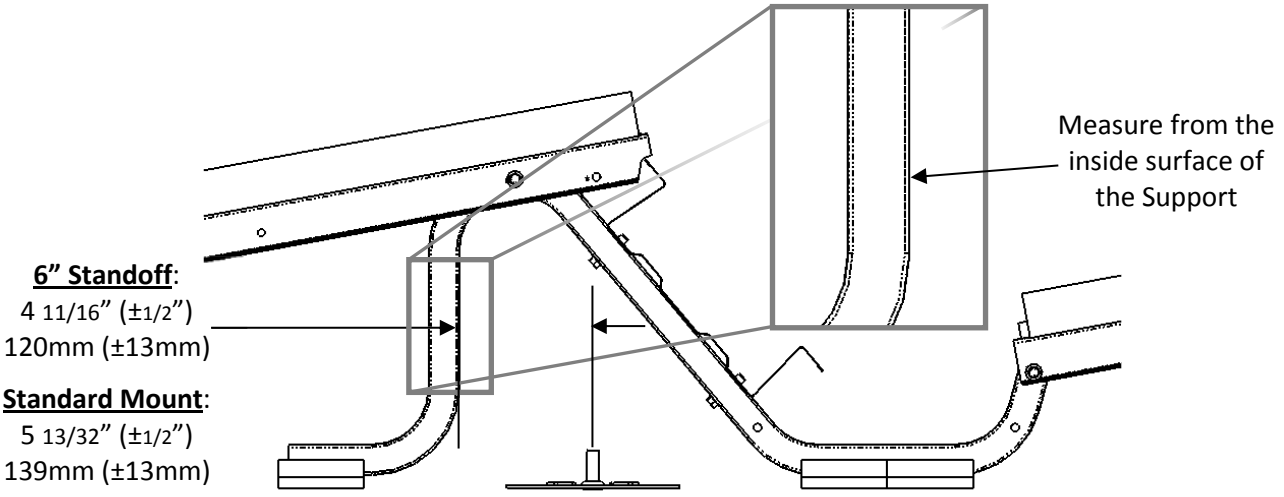

Figure 7 EcoFasten Product: Distance from Support surface to center of Mechanical Attachment

10 Degree Mechanical Attachment location and Mechanical Attachment Bracket Installation

Step 2: Install the Mechanical Attachment

1. Install the Mechanical Attachment once it has been placed appropriately. Consult the manufacturer's installation instructions and specifications regarding the proper installation and flashing of the Mechanical Attachment.

Step 3: Secure the Mechanical Attachment Bracket

1. Once the Mechanical Attachment is installed you can complete the rest of the Mechanical Attachment assembly. Attach the L-Brackets/Standoffs to the threaded stud on the Mechanical Attachment. Finger-tighten for now. (Figure 8, 9, 10)
2. With the opening facing down attach the Mechanical Attachment Bracket to the L-Bracket. Finger-tighten the hardware for now.
3. Install the Ballast Tray and locate the Mechanical Attachment Bracket so that it aligns with the inner slots of the Ballast Tray. Using the two ¼-20 x 0.75" serrated flange bolts and ¼-20 serrated flange nuts connect the Ballast Tray and Mechanical Attachment Bracket. Torque to 8 ft-lbs (Figure 8, 9, 10).
4. Torque the remaining components:
   L-Bracket to Mechanical Attachment to 30 ft-lbs.
   L-Bracket to Mechanical Attachment Stud per Manufactures installation instructions.

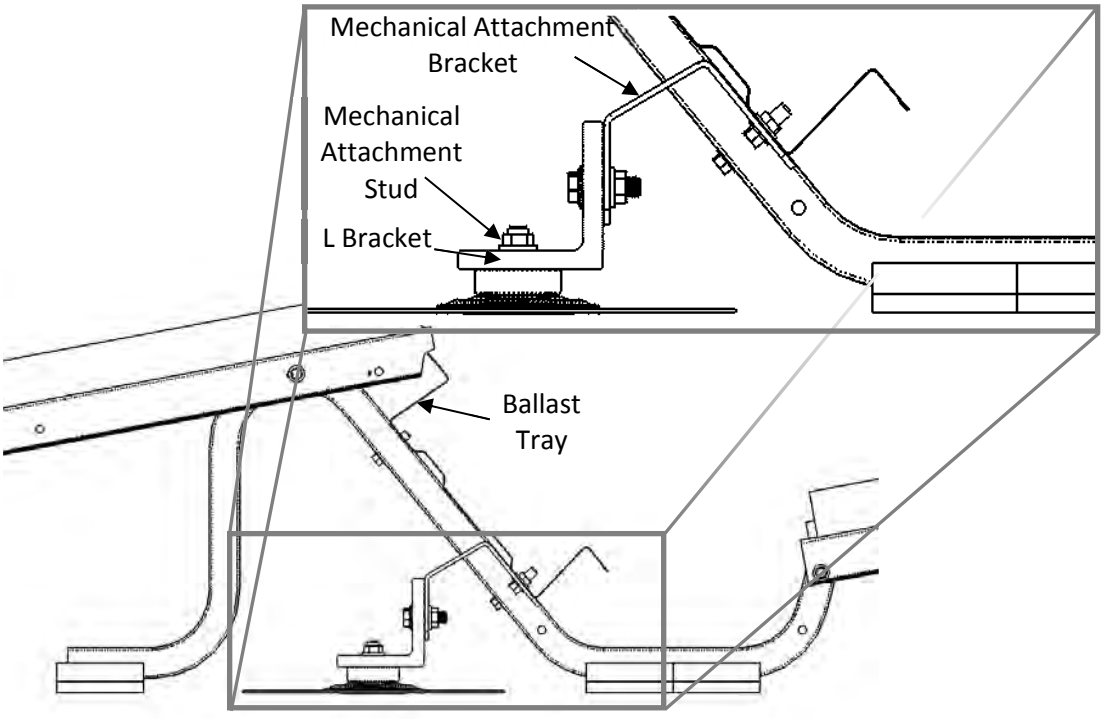

Figure 8 OMG Product: Secure the Mechanical Attachment Bracket

10 Degree Mechanical Attachment location and Mechanical Attachment Bracket Installation

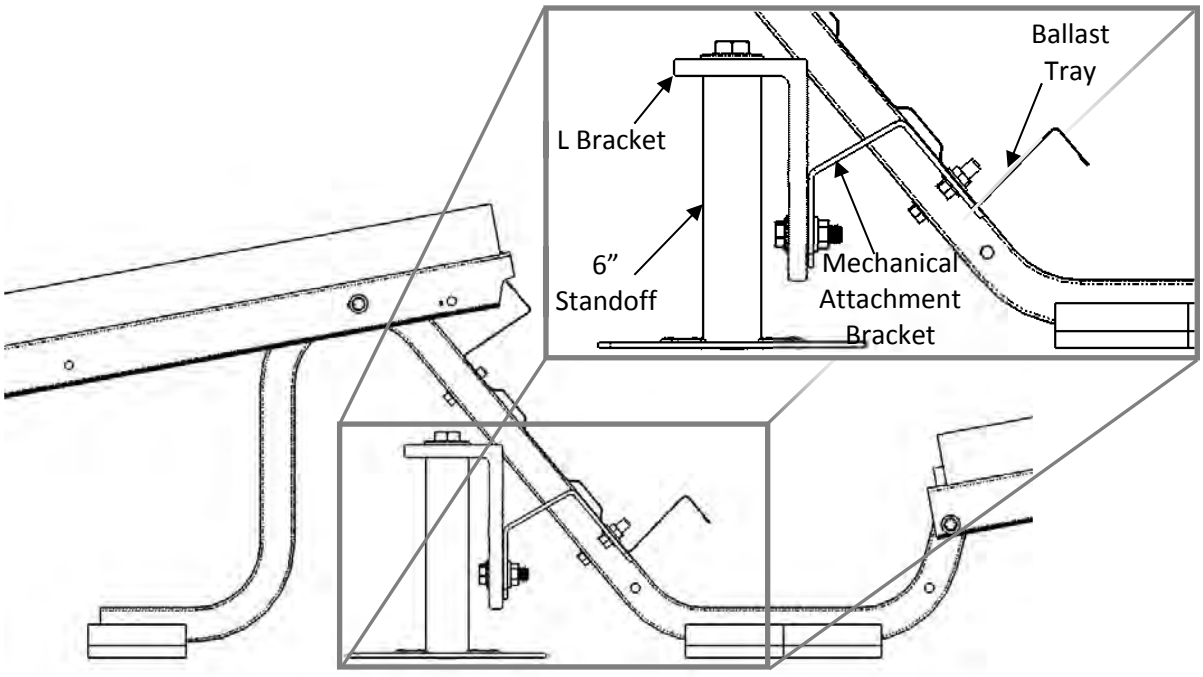

Figure 9 EcoFasten Product with 6" standoff: Secure the Mechanical Attachment Bracket

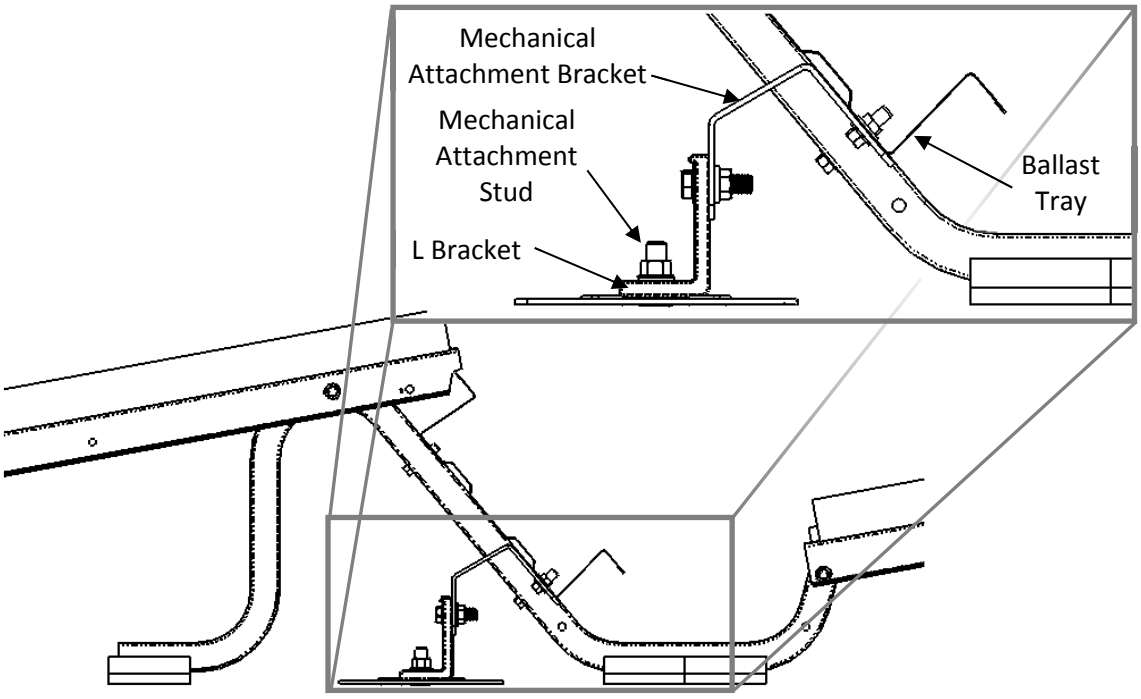

Figure 10 EcoFasten Product: Secure the Mechanical Attachment Bracket

10 Degree South Support Mechanical Attachment location and Mechanical Attachment Installation

Step 1: Position the Mechanical Attachment

1. Consult the provided Racking Construction Set Drawing for the locations of the Mechanical Attachments that need to be installed. Once the module and Supports are installed you can locate the Mechanical Attachment. Ballast Trays will need to be removed if they are already installed.
2. The Mechanical Attachments are installed between two adjacent south supports and connect to the center of the Ballast Trays.
3. Place the Mechanical Attachments matching the hole location in the Ballast Tray.

   Notes: Drill a ½" hole in the middle of the Ballast Tray if needed.

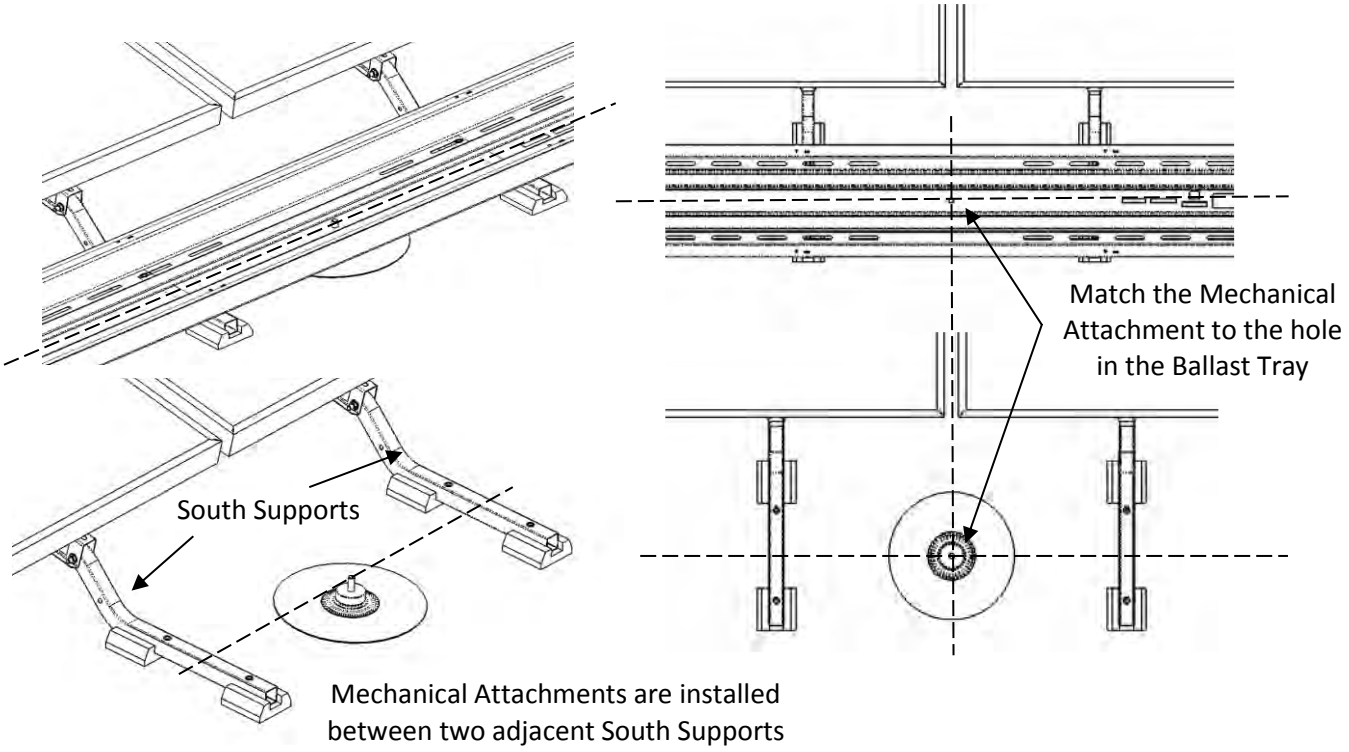

Figure 11 Place the Mechanical Attachment underneath the center of the Ballast Tray

10 Degree South Support Mechanical Attachment Location and Mechanical Attachment Installation

Step 2: Install the Mechanical Attachment

1. Install the Mechanical Attachment once it has been placed appropriately. Consult the manufacturer's installation instructions and specifications regarding the proper installation and flashing of the Mechanical Attachment.

Step 3: Connect the Mechanical Attachment to the Ballast Tray

1. Once the Mechanical Attachment is installed you can connect the Mechanical Attachment to the Ballast Tray.
2. Place the Ballast Tray on the South Supports. Match the Ballast Tray hole to the Mechanical Attachment stud. Connect the Ballast Tray to the South Supports with 4 bolts. (In some instances the Ballast Tray must be forced down to be able to install the washer and nut)
3. Connect the Mechanical Attachment to the Ballast Tray with a washer and a nut.
4. Torque the nut to 30 ft-lbs.

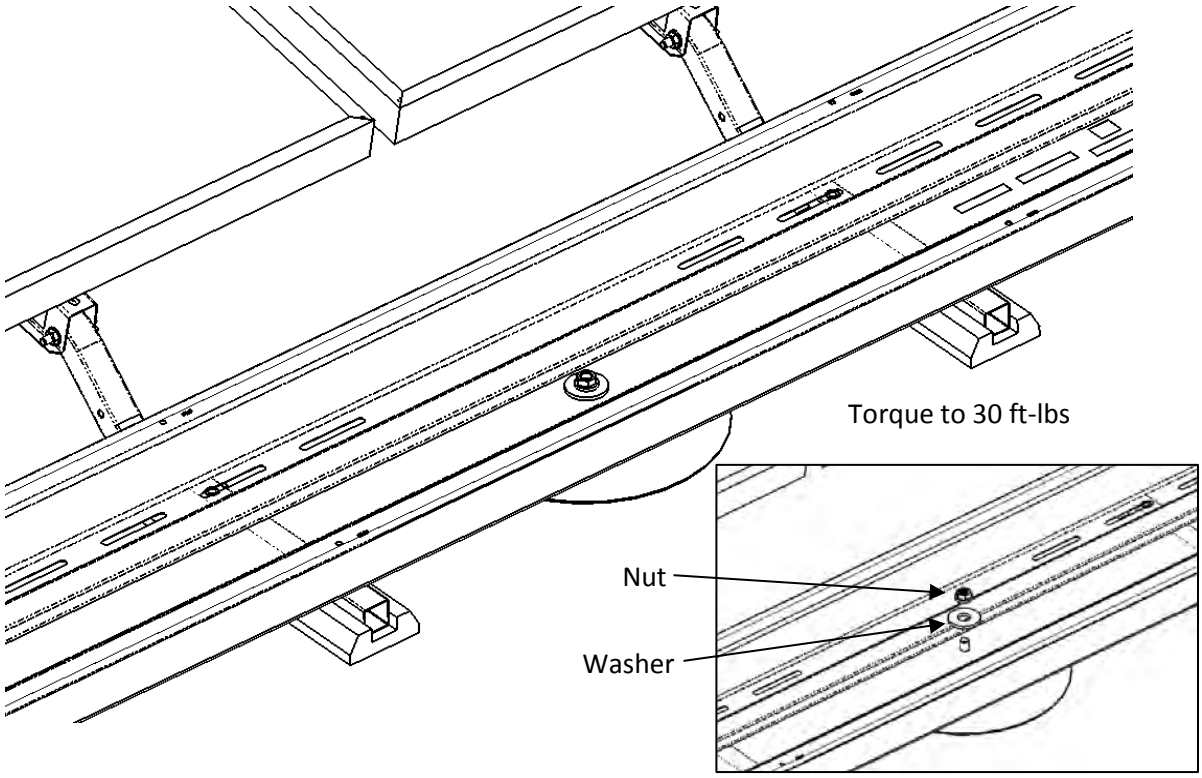

Figure 12 Connect the Mechanical Attachment to the Ballast Tray

Appendix A: Safety

The subsections below outline some of the obvious / major hazards that could exist during the installation of PanelClaw products, and are divided to bring a level of clarity to such hazards. Some sections do not apply to all PanelClaw product lines and such exclusions are noted within each section.

Electrical Hazards: PanelClaw products are purely mechanical and do not contain any electrically live parts. When a photovoltaic module is exposed to sunlight it is electrically live and cannot be turned off. As soon as modules are installed using a PanelClaw system, an electrical shock hazard is present. All personnel on site should coordinate to ensure that such electrical hazards are clearly communicated. It is advised, at a minimum, that all personnel utilize caution and proper Personal Protective Equipment as outlined in that section. Only electrically qualified personnel should perform PV module installation. Refer to OSHA Part 1926 Subpart K – Electrical and NFPA 70E for additional information.

Fall Hazards: This section only applies to Polar Bear® products installed on locations six feet or higher above grade. Proper fall protection should be in place at all work sites. There are many fall protection solutions readily available to help reduce exposure to fall hazards. These may include personal fall arrest systems, safety nets, guardrails, and flagged setbacks from all roof edges as outlined in OSHA Part 1926 Subpart M – Fall Protection.

Trip Hazards: All PanelClaw arrays have elevated components that are installed above grade or above a roof surface. Such hazards should be identified and caution should be taken to avoid tripping over such components. Refer to the Fall Hazards section specifically if working with the Polar Bear product line. Make sure to pick up and not drag your feet when working on site, and always pay attention to your path of movement to note any obstructions that could create a trip hazard.

Lifting Hazards: The PanelClaw installation process involves lifting of heavy items that could lead to personal injury and damage to property. All personnel should be trained in the proper procedures for manually lifting. Evaluate an object's size and weight prior to lifting, and follow these general guidelines for lifting:

1. Assess the lift and know the object weight.
2. Bend at the knees and get a good grip.
3. Keep back straight and lift straight up with legs without twisting. It is important to lift with the legs and not the back.
4. If an object is too large or heavy, ask for help and do not attempt to lift by yourself.
   In the case that mechanical assistance (e.g. crane, forklift, etc.) is required to complete the lifting operations, all machine operators of such devices should be licensed and trained.

Material Handling: All PanelClaw parts and components are made of aluminum and steel alloys and utilize stainless steel assembly hardware. These materials are considered non-toxic and require no special handling procedures. Metal components may have sharp edges, so be sure to handle with care and utilize proper personal protection equipment, especially gloves, during handling. Refer to OSHA Part 1926 Subpart H – Materials Handling, Storage, Use, and Disposal for additional information.

Personal Protective Equipment (PPE): All personnel should utilize and implement proper PPE per OSHA requirements. Refer to OSHA requirements for proper use and implementation of PPE. The following

items are suggested as a minimum to avoid injury based on the installation procedure outlined in this manual:

1. Appropriate work clothing
2. Electrically insulated hard hat
3. Protective eyewear
4. EH rated safety boots
5. Gloves
6. High-visibility safety vest
7. Hearing protection

If any PPE appears to be defective, stop the use of such equipment immediately, and ensure it is replaced before work continues. Refer to OSHA Part 1926 Subpart E – Personal Protective and Life Saving Equipment for additional information.

Hand and Power Tools: Access to all hand and power tools should be regulated and controlled at all times on site to prevent improper use and related injuries. When not in use, all equipment should be stored in a secured location. Only personnel who have been properly trained in the safe operation of any potentially dangerous tool should be allowed access. All required tools to perform the installation of PanelClaw racking are outlined in the installation procedure. All tools should be inspected daily and before use by the operator. If any tool appears to be defective, stop the use of such equipment immediately, and ensure it is replaced before work continues. Electrical power tools should follow proper lock-out tag-out procedures per OSHA requirements. Refer to OSHA Part 1926 Subpart I – Tools – Hand and Power for additional information.

UCRM 5: BUILDING AUTOMATION

DRAFT

This document contains Performance Services Trade Secrets and Confidential information to be used by the addressee for evaluating the PSI proposal.
Addressee shall not disclose the Confidential information to third parties without written consent of Performance Services.

MACH-ProSys™

BACnet® Controller

Reliable® controls

Apex of control

With its onboard I/O, the Reliable Controls® MACH-ProSys™ takes the MACH-ProCom™ higher, reaching the apex of control as a fully programmable, Internet-connected, BACnet Building Controller (B-BC) ideal for large rooftop equipment, large mechanical rooms and multi-building applications.

5 year Warranty

Better by design

ISO 9001 14001 QUALITY ASSURANCE

Member of BACnet International

LISTED OPEN ENERGY MANAGEMENT EQUIPMENT 69DM

241

www.reliablecontrols.com/MPS

Tech Specs

Processor
- 147 MHz, high-performance, 32-bit embedded microcontroller

Memory
- 8 MB operating RAM
- 1 MB non-volatile RAM(trends and dynamic values)
- 4 MB Flash EEPROM operating system, database, and controller configuration

Supply Voltages
- 24 VAC ±10% 75 VA max. 50/60 Hz
- 24 VDC ±10% 26 W max.

Communications
- IEEE 802.3 Ethernet 10/100 BaseT
- 2 EIA-485 @ 76.8 kbps max.
- 1 EIA-232 @ 115.2 kbps max. PC or modem
- SMART-Net port @ 16 sensors max.

Universal Inputs
- 12 universal inputs
- 12-bit A/D converter
- Analog: 0–10 VDC, 4–20 mA, thermistor
- Binary: dry contact
- Impedance:
  1 MΩ for 0–10 VDC range
  250 Ω for 4–20 mA range
  20 kΩ pull-up for thermistor/ dry contact range
- Pulse counting up to 150 Hz (supports flow meters)
- 24 VAC over-voltage protection

8 Outputs
- 12-bit D/A converter
- First four outputs are socketed to accommodate relay, TRIAC, or universal modules (output modules sold separately)
- Analog: 0–12 VDC
- Binary: 0/12 VDC
- Manual ON provides adjustable 0–12 VDC (HOA model only)
- LED indicator (glows proportionally)
- Output power: 75 mA @ 12 VDC
- 24 VAC over-voltage and short protection

Expansion Modules
- Up to 7 MACH-ProPoint expansion modules

Peripheral Power
- Onboard variable 15–24 VDC power supply providing up to 200 mA of DC power to peripheral devices
  (If powered with 24 VDC, the maximum voltage output is 22 VDC)

Real-Time Clock
- ±1 second per day

Memory/RTC Backup
- 72 hour backup
- 10 years for database

Wiring Terminals
- 12 to 22AWG (3.31 mm^2 to 0.33 mm^2)
- Stranded or solid core
- Copper conductors only

Dimensions
- 25.4 cm L x 13.7 cm W x 3.9 cm H (10" L x 5 3/8" W x 1 1/2" H)

Mounting
- #8 clearance holes on 23.0 cm L x 11.0 cm W (9 1/16" L x 4 5/16" W)
- Screw depth 25 mm (1")

Weight
- 1.3 kg (2.7 lb)

Ambient Limits
- Operating: -20 °C to 55 °C (-4 °F to 131 °F)
- Shipping: -40 °C to 60 °C (-40 °F to 140 °F)
- Humidity: 10% to 90% RH non-condensing

Features

Protocol
- BACnet
  - B/IP x 2, Ethernet, MS/TP and PTP
- DHCP
  - Dynamic Host Configuration Protocol
- Modbus
  - Supports both RTU and TCP communications in slave mode and master mode with up to 128 slave devices
- SMTP
  - Provides standard email communications for broadcasting email alarms
  - Supports TLS/SSL security
- SNMP
  - Simple Network Management Protocol
- SNTP
  - Simple Network Time Protocol

12 Inputs
- Universal ranges
- Expandable using MACH-ProPoint expansion modules
- Maximum possible inputs of 180

8 Outputs
- Outputs 1–4 are wired to unpopulated sockets
- Outputs 5–8 are universal (no sockets)
- Expandable using MACH-ProPoint expansion modules
- Maximum possible outputs of 120

1024 Variables
- Selectable standard and custom ranges, as well as fixed program-driven values

128 PID Loops
- Standard P, PI, or PID controllers for closed loop control

128 Schedules
- 14 On/Off times for each weekday or exception

32 Calendars
- Days of the year designated as holidays

20 Custom Tables
- For creating custom scaling functions

64 System Groups
- Allows related points to be grouped onto one display
- 160 points/group

128 Control-BASIC™ Programs
- User programmable control strategy in a readable, BASIC-like language
- 3200 bytes per program

Trend Logs
- Each Trend Log stores up to 8 points
- Values recorded at user-defined intervals
- Dynamically assigned

Runtime Logs
- Totals the On time and records the On/Off times of every binary point
- Dynamically assigned

128 Variable Arrays
- Up to 128 elements in a one-dimensional array

128 User Passwords
- Protects access to system
- Each user is assigned a user name and an access level

Custom Units
- 8 analog engineering units
- 8 binary units
- 8 multistate units with 8 states, 30 characters each

SMART-Net™ Port
- Networks up to 16 SMART-Sensors™

1536 Network In Points
512 Network Out Points
- The total maximum number of writes and shares to other devices

Real-Time Clock

Warranty
- 5 years

Certification
- BTL Listed (B-BC)
- UL 916 Listed
- FCC CFR 47 Part 15/B
- CE

Ordering

MP-S
- MACH-ProSys controller

MP-S-H
- MACH-ProSys controller with HOA (Hand/Off/Auto) switches and potentiometer overrides for each output

MP-S-SMK
- MACH-ProSys controller certified for smoke control. See MP-S-SMK submittal for details

MP-S-H-SMK
- MP-S-SMK with HOA (Hand/Off/Auto) switches and potentiometer overrides for each output

Accessories

MP-DINRAIL
- Two-piece adapter kit to mount controller onto 35 mm x 7.5 mm top hat DIN rail. DIN rail not included

MPP-IO
- MACH-ProPoint I/O expansion module with 12 universal inputs and 8 outputs

MPP-IO-H
- MPP-IO with HOA (Hand/Off/Auto) switches and potentiometer overrides for each output

MPP-IO-U
- MACH-ProPoint I/O expansion module with 12 universal inputs and 8 universal outputs

MPP-IO-U-H
- MPP-IO-U with HOA (Hand/Off/Auto) switches and potentiometer overrides for each output

MPP-IO-DL
- Door label sheet for MP-S, MP-S-H, MPW-S, MPW-S-H, MPP-IO, MPP-IO-H, MPP-IO-U, and MPP-IO-U-H

MPP-I
- MPP Input expansion module with 24 universal inputs

MPP-I-DL
- Door label sheet for MPP-I

MPP-O
- MACH-ProPoint output expansion module with 16 universal outputs

MPP-O-H
- MPP-O with HOA (Hand/Off/Auto) switches and potentiometer overrides for each output

MPP-O-DL
- Door label sheet for MPP-O

RM
- Relay output module (package of 10)

TM
- TRIAC output module (package of 10)

UM
- Universal output module (package of 10)

SS-RJ11TB-B, SS-RJ11TB-C
- SMART-Net breakout connector RJ-11 to terminal block

SS-X
- SMART-Sensor Network Expansion Board

© 2007–2016 Reliable Controls® Corporation. All rights reserved

Application Diagram

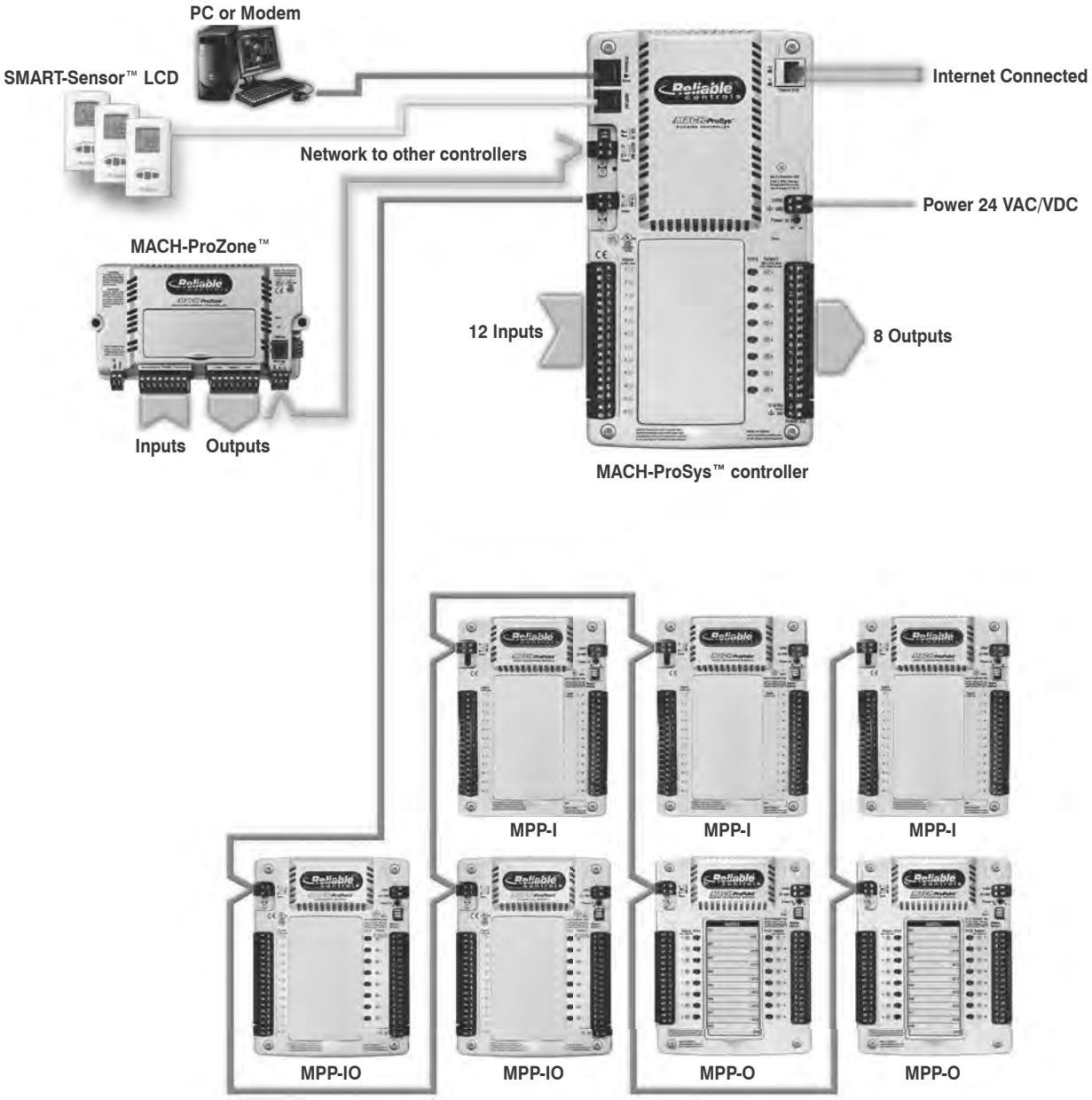

Connect up to 7 MACH-ProPoint expansion modules of any mix with a maximum input count of 180, and a maximum output count of 120 per controller. Expansion modules are daisy-chained to the I/O-Net port of the controller in any combination.

© 2007–2016 Reliable Controls® Corporation. All rights reserved

UCRM 6: WATER CONTROLS

DRAFT

This document contains Performance Services Trade Secrets and Confidential information to be used by the addressee for evaluating the PSI proposal.
Addressee shall not disclose the Confidential information to third parties without written consent of Performance Services.

UCRM 4: WATER CONTROLS

This document contains Performance Services Trade Secrets and Confidential information to be used by the addressee for evaluating the PSI proposal.
Addressee shall not disclose the Confidential information to third parties without written consent of Performance Services.

WATER SAVINGS

The water savings generated from installing an I-CON system is VERY SIGNIFICANT and long term. With water savings of up to 70%, most systems pay for themselves in 2 to 5 years. The savings of our natural resources is immediate and priceless. We're saving nearly 400 correctional facilities, both nationally and internationally, billions of gallons of water and millions of dollars in wastewater & water heating costs every month...the proof is on their water bills.

See how much you can save with our

Savings Calculator!

SAVE WATER. SAVE MONEY.

EASE OF INSTALLATION & MAINTENANCE

Our retrofit systems are easy to switch to and easy to maintain. The quality and durability of our products decreases the frequency of rebuilding/replacing parts that wear or degrade over time, which reduces labor and parts costs. Typically, our consumable parts last at least three times longer than the other comparable products on the market. Maintenance personnel prefer our systems because they spend a minimal amount of time servicing them. Government officials and facility managers also prefer our products because they see the cost savings, added security, reliability, and the overall benefits of working with our systems. Their maintenance staff is no longer fighting a losing battle trying to keep the plumbing system functional and secure.

TYPICAL EXISTING PNEUMATIC BLOCK	I-CON® PNEUMATIC BLOCK RETROFIT

MORE SECURITY & GREATER CONTROL WITH THE TOUCH OF A FINGER USING ENVISAGE®

Envisage offers increased security by offering facility staff the ability to control and monitor all plumbing fixtures graphically displayed on your facility's floor plan. With the touch of a finger our customers can lockdown, remotely flush, schedule usage and control all the parameters of the plumbing fixtures for a single cell, multiple cells, or an entire facility. Typically these features are used to perform contraband searches and inmate extractions. It offers easy maintenance and great features for keeping your facility plumbing system more secure and functioning properly.

LOCKOUT THE PLUMBING FOR A SINGLE CELL OR THE ENTIRE FACILITY WITH THE TOUCH OF A FINGER	MAINTENANCE FUNCTIONS ON INDIVIDUAL FIXTURE VIA TOUCH SCREEN
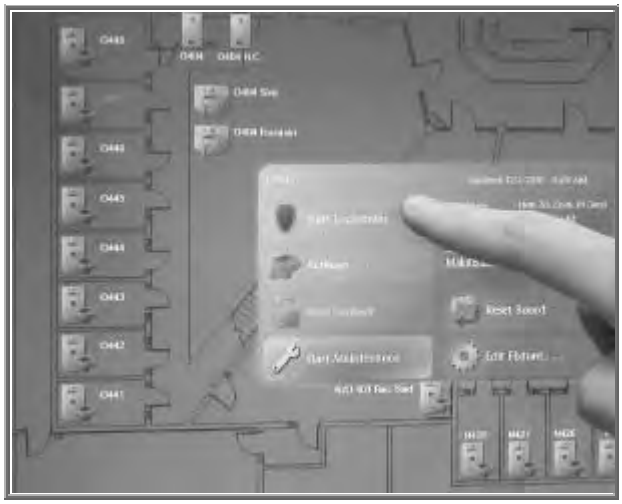	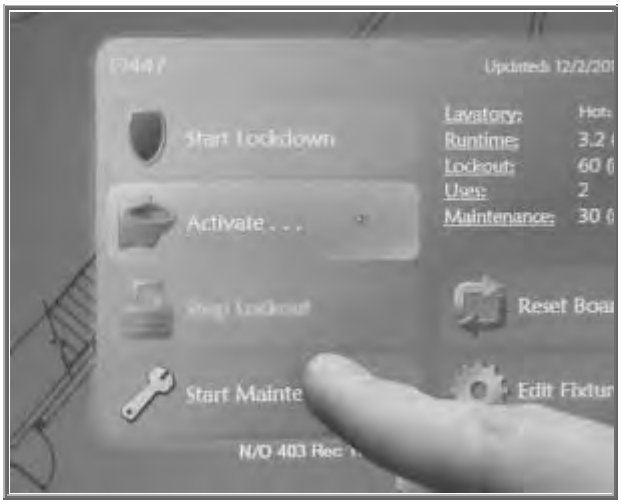

ONLY I-CON FLUSH VALVES CAN PREVENT TOILET FIRES

The I-CON® MOMENTUM® flush valve is designed to have a positive reset after pressure loss occurs which means it's the only flush valve that can prevent toilet fires.

A toilet fire is a typical condition that occurs to standard diaphragm flush valves causing the water to continually run when the water pressure supplied to the valve is too low for the valves' diaphragms to close, causing thousands of gallons of water per minute to be wasted until each flush valve is manually reset which can take days to complete the process.

OUR FLUSH VALVES HAVE A POSITIVE SEAL

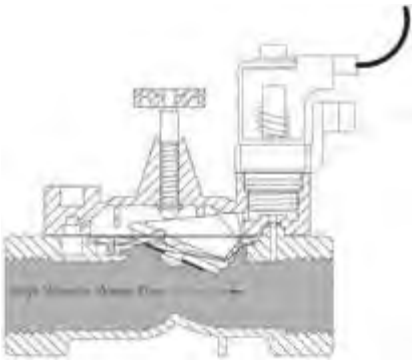

INSTALL FLUSH VALVES IN REMOTE LOCATIONS

Our I-CON MOMENTUM® flush valves can be located remotely while maintaining proper GPF requirements, our competitors valves cannot. Many other I-CON products are also suitable for remote for remote location, such as: lavatory valves, shower valves, urinal valves, and drinking fountain valves. Likewise, our electronics controllers in conjunction with other I-CON products can offer customized systems such as the control panel illustrated below. We have the ability to customize any I-CON system based on each facility's needs, such as: reduced maintenance, enhanced security, and easy one touch controls.

GROUP VALVES TOGETHER, NO NEED TO BE BY FIXTURE

CONNECT TWO LEVELS FOR EASY MAINTENANCE

SLOAN®
Efficiency Series

Model
ST-2029-A Universal Closet
Top Spud ADA Compliant Vitreous China Water Closet

DESCRIPTION
Complete vitreous china water closet.

Flush Cycle
Model ST-2029-A* Universal Closet

(1.1 to 1.6 gpf/4.2 to 6.0 Lpf)

Code: 2102029

Flush volume is determined by the flushometer used with closet.

HET** HIGH-EFFICIENCY TOILET

SPECIFICATIONS
Fixture
- Vitreous China
- Floor Mounted
- ADA Compliant
- Siphon Jet Flushing Action
- 1-1/2" IPS top spud inlet
- 2-1/8" trapway diameter
- Fully Glazed Trapway
- Integral Flushing Rim
- Elongated Bowl
- Water Spot Area 10" x 7 1/2"
- Closet Bolts and Caps Included
- Water closet compliant to the applicable sections of ASME A112.19.2/CSA B45.1
- Toilet Seat Not Included

Colors/Finishes
- White

Recommended Seats
- Bemis - 1955CT/1955SSCT & 2155CT/2155SSCT
- Church - 295CT/295SSCT & 2155CT/2155SSCT

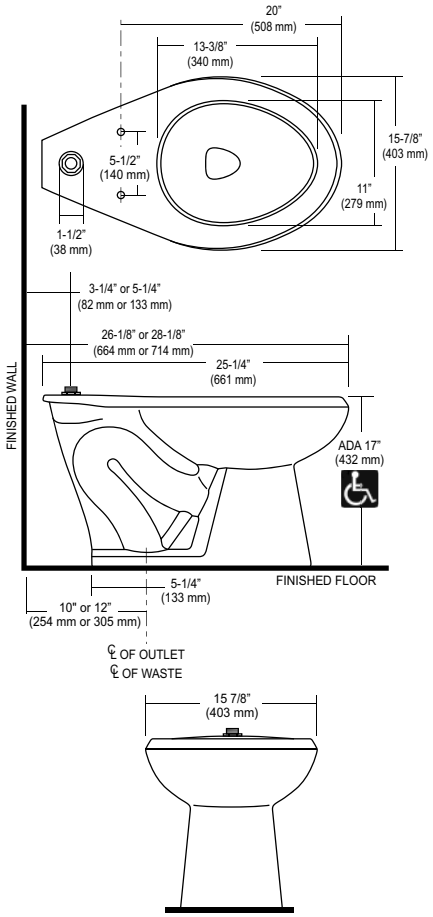

NOTE: All vitreous china dimensions shown in these drawings are nominal. Dimensions can vary within the tolerances established in the governing ASME A112.19.2/CSA B45.1 standard. Please take this into consideration when planning rough-in and plumbing layouts.

Product Specification
Elongated water closet shall be made of vitreous china with a 1-1/2" top spud. Bowl shall be ADA Compliant when installed at required height of 17" from floor to top of fixture. Water Closet shall be Sloan Model ST-2029-A.

* Please note that this model is fully interchangeable with Models: ST-2020-A, ST-2022-A, ST-2023-A and matches all dimensional and performance parameters.

** This model meets the requirements for a High Efficiency Toilet when used with a high efficiency flushometer (1.28 gpf/4.8 Lpf or 1.1/1.6 gpf-4.2/6.0 Lpf dual-flush).

GREEN ** UPC Water Efficiency Listed by IAPMO

NOTE: Plumbing System Requirements
√ Minimum **Flowing** Pressure: 25 PSI
√ Maximum Static Pressure: 80 PSI
√ Minimum Flow Rate: 18 GPM

This space for Architect/Engineer approval

Job Name _____ Date _____

Model Specified _____ Quantity _____

Variations Specified _____

Customer/Wholesaler _____

Contractor _____

Architect _____

The information contained in this document is subject to change without notice.

SLOAN®
Sloan
10500 Seymour Avenue
Franklin Park, IL 60131
Phone: 1-800-982-5839
Fax: 1-800-447-8329
www.sloanvalve.com

© 2013 Sloan Valve Company
ST-2029 10-13

Efficiency Series

Model

ST-2059-A Universal Closet

Top Spud Vitreous China Elongated Water Closet

DESCRIPTION

Complete vitreous china water closet.

Flush Cycle

Model ST-2059-A Universal Closet
(1.1 to 1.6 gpf/4.2 to 6.0 Lpf)

Flush volume is determined by the flushometer used with closet.

HIGH-EFFICIENCY TOILET

SPECIFICATIONS

Water Closet

- Wall hung vitreous china elongated bowl
- Siphon jet flushing action
- 1-1/2" I.P.S. top spud inlet
- 2-1/8" fully glazed trapway diameter
- Mounting hardware, carrier and toilet seat not included
- Integral flushing rim
- Water spot area 9 1/2" x 8 1/4"
- ASME A112.19.2/CSA B45.1

Colors/Finishes

- White

Recommended Accessories

- Compatible with toilet seat models:
  Olsonite 10CT
  Bemis 1955 CT
  Church Commercial 295CT

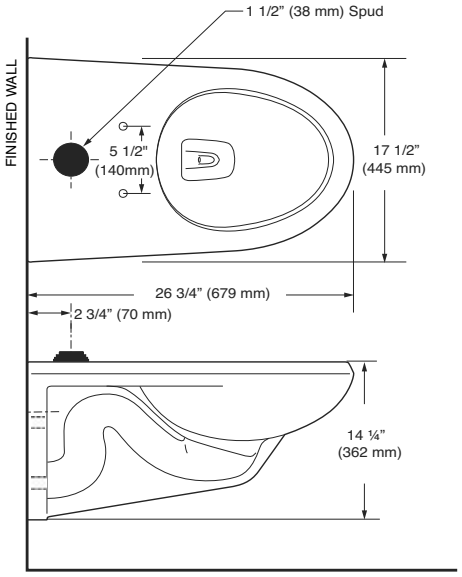

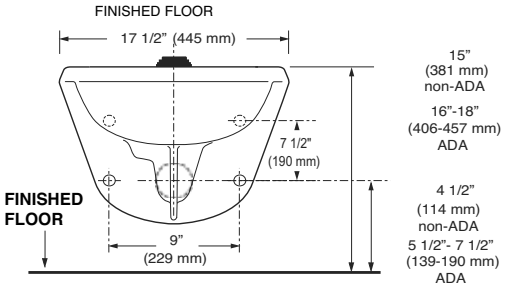

Designed to Meet ADA standards
when bowl is 17" - 19" high **including seat**

* Please note that this model is fully interchangeable with Models: ST-2050-A, ST-2052-A, ST-2053-A and matches all dimensional and performance parameters.

** This model meets the requirements for a High Efficiency Toilet when used with a high efficiency flushometer (1.28 gpf/4.8 Lpf or 1.1/1.6 gpf-4.2/6.0 Lpf dual-flush).

Meets the American Disabilities Guidelines and ANSI A117.1 requirements when installed according to these requirements.

NOTE:
Plumbing System Requirements
√ Minimum **Flowing** Pressure: 25 PSI
√ Maximum Static Pressure: 80 PSI
√ Minimum Flow Rate: 18 gpm

UPC
C ®
Water Efficiency
Listed by
IAPMO

NOTE: All vitreous china dimensions shown in these drawings are nominal. Dimensions can vary within the tolerances established in the governing ASME A112.19.2/CSA B45.1 standard. Please take this into consideration when planning rough-in and plumbing layouts.

Product Specification

Elongated water closet shall be made of vitreous china with a 1-½" top spud inlet. Bowl shall be ADA compliant when installed at required height of 17"-19" from floor to top of fixture (including seat). Water Closet shall be Sloan Model ST-2059-A.

This space for Architect/Engineer approval

Job Name _____ Date _____

Model Specified _____ Quantity _____

Variations Specified _____

Customer/Wholesaler _____

Contractor _____

Architect _____

Sloan Headquarters
10500 Seymour Avenue
Franklin Park, IL 60131
Phone: 1-800-982-5839
Fax: 1-800-447-8329
www.sloanvalve.com

© 2013 Sloan Valve Company

SLNSS-VF/ST2059A – Rev. 1b (05/13)

The information contained in this document is subject to change without notice.

Church COMMERCIAL

COMMERCIAL HEAVY-DUTY PLASTIC TOILET SEAT

PLASTIC HINGES WITH STAINLESS STEEL POSTS AND PINTLES

STA-TITE® COMMERCIAL FASTENING SYSTEM™

MODEL #	COLOR #
295CT/295SSCT	_____

DESCRIPTION:

Open front less cover, elongated, heavy-duty, injection molded solid plastic toilet seat. Features four molded-in bumpers, non self-sustaining (295CT) or self-sustaining (295SSCT) check hinges with non-corrosive 300 Series stainless steel posts and pintles and STA-TITE® Commercial Fastening System™. This seat complies with IAPMO/ANSI Z124.5-2013 Plastic Toilet Seats as a class Commercial Heavy Duty.

SPECIFICATIONS:

Size:	Elongated
Material:	Plastic
Style:	Open Front less Cover
Bumpers:	Four
Hinges:	Plastic Non Self-Sustaining (295CT) or Self-Sustaining (295SSCT) with 300 Series Stainless Steel Posts and Pintles
Fastening System:	STA-TITE® Commercial Fastening System™

FEATURES:

STA-TITE® Commercial Fastening System™

Non-Corrosive 300 Series Stainless Steel Posts and Pintles

DIMENSIONS:

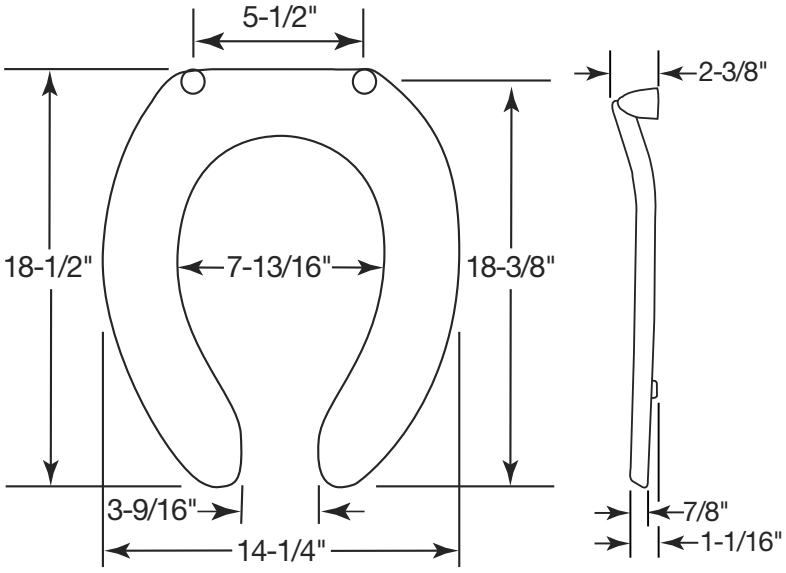

Proudly Made in the USA

Church Seats, Sheboygan Falls, WI 53085
www.ToiletSeats.com
Phone: 800-233-7328 Fax: 800-292-3647

Sloan® Model 111-1.28 Flushometer

HIGH-EFFICIENCY TOILET

Description
Exposed Water Closet Flushometer for floor mounted or wall hung top spud bowls.

Flush Cycle
Model 111-1.28 High Efficiency (1.28 gpf/4.8 Lpf)

Specifications
Quiet, Exposed, Diaphragm Type, Chrome Plated Closet Flushometer with the following features:

- High Chloramine Resistant PERMEX® Synthetic Rubber Diaphragm with Linear Filtered Bypass and Vortex Cleansing Action™
- ADA Compliant Metal Oscillating Non-Hold-Open Handle with Triple Seal Handle Packing
- 1" I.P.S. Screwdriver Bak-Chek® Angle Stop
- Vandal Resistant Stop Cap
- Adjustable Tailpiece
- Vacuum Breaker with Flush Connection
- Spud Coupling and Spud Flange for 1½" Top Spud
- Sweat Solder Adapter with Cover Tube and Cast Wall Flange
- High Copper, Low Zinc Brass Castings for Dezincification Resistance
- Non-Hold-Open Handle and No External Volume Adjustment to Ensure Water Conservation
- Low Consumption flush accuracy
- Handle Packing, Stop Seat and Vacuum Breaker Molded from PERMEX® Rubber Compound for Chloramine Resistance

Valve Body, Cover, Tailpiece and Control Stop shall be in conformance with ASTM Alloy Classification for Semi-Red Brass. Valve shall be in compliance to the applicable sections of ASSE 1037 and ANSI/ASME A112.19.2.

Variations

☐	YO	Bumper on Angle Stop
☐	DFB	Dual Filtered Fixed Bypass Diaphragm
☐	SG	Saniguard® Antimicrobial Coating Protects Handle and Socket*
☐	HL-3	3" Metal Oscillating Push Button on front of valve (does not meet ADA requirements)

*Saniguard does not protect users or others against disease-causing bacteria.

Accessories
See Accessories Section of the Sloan catalog for details on these and other Flushometer variations.

Fixtures
Consult Sloan for Sloan brand matching fixture options.

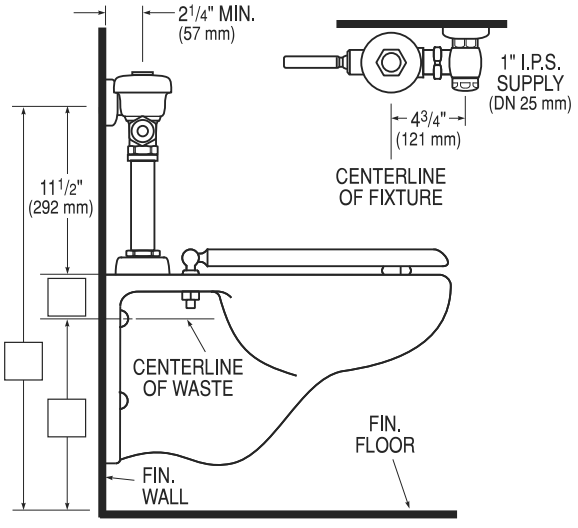

This space for Architect/Engineer approval

The information contained in this document is subject to change without notice.

SLOAN®
SLOAN VALVE COMPANY • 10500 SEYMOUR AVE. • FRANKLIN PARK, IL 60131
Ph: 1-800-9-VALVE-9 or 1-847-671-4300 • Fax: 1-800-447-8329 or 1-847-671-4380
www.sloanvalve.com

Copyright © 2014 SLOAN VALVE COMPANY

SLOAN®

Efficiency Series

Model

SU-1200 Series

Vitreous China Retrofit Top Spud Urinal

DESCRIPTION

Complete HEU vitreous china retrofit top spud urinal fixture.

Flush Cycle

☐ Model SU-1200-0.125 (0.125 gpf/0.5 Lpf)
Code: 1101200

☐ Model SU-1202-0.25 (0.25 gpf/1.0 Lpf)
Code: 1101202

☐ Model SU-1205-0.5 (0.5 gpf/1.9 Lpf)
Code: 1101205

HEU
HIGH-EFFICIENCY URINAL

SPECIFICATIONS

Urinal Fixture

- Wall hung vitreous top spud china
- Large footprint to cover old caulk lines
- Washdown flushing action
- 3/4" I.P.S. top spud inlet
- 2" NPT outlet flange
- All mounting hardware included
- Integral flushing rim
- 100% factory flush tested
- Compliant to the applicable sections of ASME A112.19.2/CSA B45.1
- Carrier not included

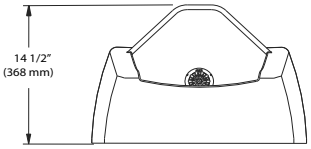

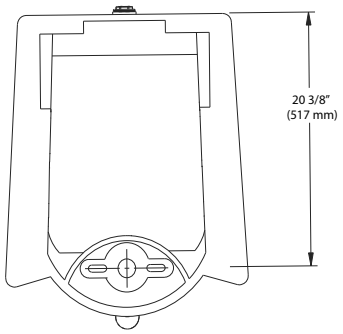

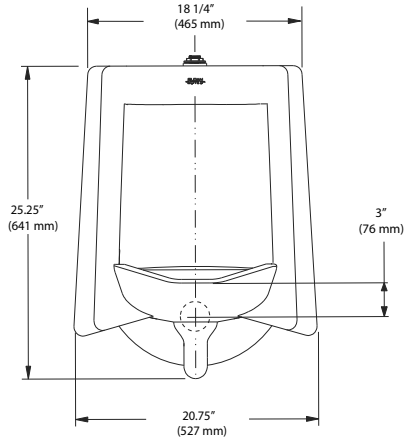

NOTE : All vitreous china dimensions shown in these drawings are nominal. Dimensions can vary within the tolerances established in the governing ASME A112.19.2/CSA B45.1 standard. Please take this into consideration when planning rough-in and plumbing layouts.

Meets the American Disabilities Guidelines and ANSI A117.1 requirements when installed at the proper height requirements for accessibility.

NOTE: Plumbing System Requirements
√ Minimum **Flowing** Pressure: 25 PSI
√ Maximum Fixture Static Presure: 80 PSI

GREEN UPC Water Efficiency

WaterSense Meets EPA Criteria
Certified by IAPMO R&T

Product Specification

Washdown urinal shall be made of vitreous china with a 3/4" top spud. Urinal shall have a 14" rim. Urinal shall include a removable strainer, inlet spud and hanger. Urinal shall be Sloan Model SU-12___-___gpf.

This space for Architect/Engineer approval

Job Name _____ Date _____

Model Specified _____ Quantity _____

Variations Specified _____

Customer/Wholesaler _____

Contractor _____

Architect _____

The information contained in this document is subject to change without notice.

SLOAN®
Sloan Valve Company
10500 Seymour Avenue
Franklin Park, IL 60131
Phone: 1-800-9-VALVE-9 (982-5839)
or 1-847-671-4300
Fax: 1-800-447-8329 or 1-847-671-4380
www.sloanvalve.com

Copyright © 2013 Sloan Valve Company
SU-1200 09-13

HEU
HIGH-EFFICIENCY URINAL

Royal® Model 186 Flushometer

Made with Renewable Energy

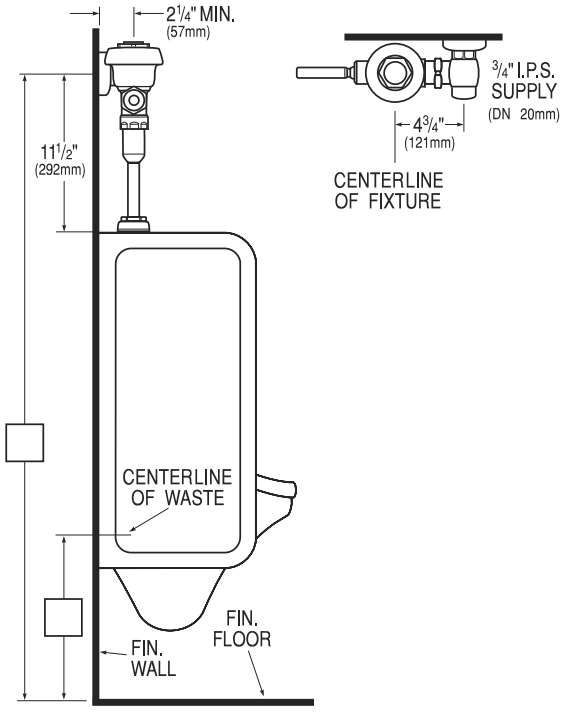

Description
Exposed Urinal Flushometer, for ¾" top spud urinals.

Flush Cycle
- ☐ Model 186-0.125 (0.125 gpf/0.5 Lpf)
- ☐ Model 186-0.25 (0.25 gpf/1.0 Lpf)
- ☐ Model 186-0.5 (0.5 gpf/1.9 Lpf)

Specifications
Quiet, Exposed, Diaphragm Type, Chrome Plated Urinal Flushometer with the following features:

- For Flushing Volumes 0.125 and 0.25: Dual Linear Filtered Bypass Diaphragm
- For Flushing Volume 0.5: Dual Filtered Bypass Diaphragm
- ADA Compliant Metal Oscillating Non-Hold-Open Handle with Triple Seal Handle Packing
- ¾" I.P.S. Screwdriver Bak-Chek® Angle Stop
- Free Spinning Vandal Resistant Stop Cap
- Adjustable Tailpiece
- High Back Pressure Vacuum Breaker Flush Connection with One-piece Bottom Hex Coupling Nut
- Spud Coupling and Flange for ¾" Top Spud
- Sweat Solder Adapter w/Cover Tube & Cast Wall Flange w/Set Screw
- High Copper, Low Zinc Brass Castings for Dezincification Resistance
- Non-Hold-Open Handle, Fixed Metering Bypass and No External Volume Adjustment to Ensure Water Conservation
- Flush Accuracy Controlled by CID Technology
- Diaphragm, Handle Packing, Stop Seat and Vacuum Breaker molded from PERMEX® Rubber Compound for Chloramine Resistance

Valve Body, Cover, Tailpiece and Control Stop shall be in conformance with ASTM Alloy Classification for Semi-Red Brass. Valve shall be in compliance to the applicable sections of ASSE 1037 and ANSI/ASME A112.19.2.

Variations
- ☐ HL-3 3" Metal Oscillating Push Button on front of valve (does not meet ADA requirements)
- ☐ SG SaniGuard® Antimicrobial Handle and Socket

Accessories
See Accessories Section of the Sloan catalog for details on these and other Flushometer variations.

Fixtures
Consult Sloan for Sloan brand matching fixture options.

WaterSense Meets EPA Criteria Certified by IAPMO R&T

U.S. GREEN BUILDING COUNCIL MEMBER

EPA GREEN POWER PARTNER

Sloan Valve Company is buying renewable energy certificates to meet 100% of the company's purchased electricity use at its Franklin Park, Illinois facility.

This space for Architect/Engineer approval

Job Name _____ Date _____

Model Specified _____ Quantity _____

Variations Specified _____

Customer/Wholesaler _____

Contractor _____

Architect _____

The information contained in this document is subject to change without notice.

SLOAN®

SLOAN VALVE COMPANY • 10500 SEYMOUR AVE. • FRANKLIN PARK, IL. 60131
Ph: 1-800-982-5839 or 1-847-671-4300 • Fax: 1-800-447-8329 or 1-847-671-4380
www.sloanvalve.com

Royal 186 HEU S.S. — Rev. 0d (03/12)
Copyright © 2012 SLOAN VALVE COMPANY

USA Landlord
Landlord and Tenant Conservation Products

PCA® Spray
Faucet Attachment - 0.5 gpm max
Pressure compensating Regular Size

Tel: (866) 253-0102
Fax: (484) 944-1590
www.usalandlord.com
Certified WBE Company

Features and Benefits

- Pressure compensating for constant flow from 20 to 80 psi.
- Provides non-splashing, non-aerated spray.
- Anti-clogging dome screen filters sediment and particles.
- Color-coded to identify flow rate.
- Virtually unbreakable single piece insert ensures a longer usable life.
- Compatible with all NEOPERL® regular male and female housings, vandal proof and metric size housings.
- Available housing finishes: chrome.
- Laser marked housings: statutory mark and custom logo.
- Rubber washer.

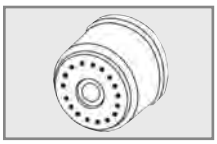

Certification

ANSI/NSF 61

ASME A112.18.1M

CSA B125

Designation & Thread Sizes

Designation	Thread Size
Insert only	
Regular male	15/16"-27
Regular female	55/64"-27
Regular dual thread	15/16"-27 x 55/64"-27
Regular male vandal proof	15/16"-27
Regular female vandal proof	55/64"-27
Regular dual thread vandal proof	15/16”-27 x 55/64”-27
Vandal key	

*Other combinations also available

Housings

Regular Male

Regular Male VP

Regular Female

Regular Female VP

Insert Color Code

Dome: White	Diffuser: Lime Green	Basket: Gray

Dimensions

No	mm	In
A	13.00	.512
B	19.95	.785
C	≈ 25	≈ 1

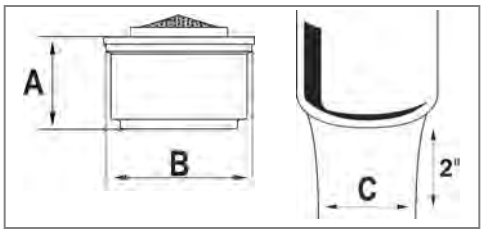

Flow Rate Curve

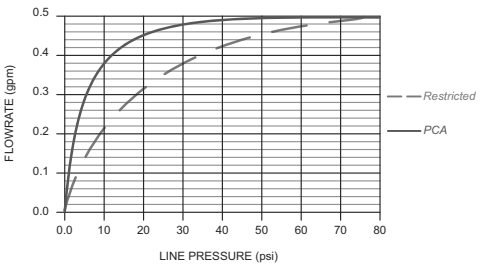

Technical Data

Material:

Body	Acetal
O-ring	EPDM
Washer	EPDM

Working temperature: 150°F
Working pressure: 125 psi

© 2010 by NEOPERL, Inc. Information subject to change without notice

UCRM 7: WINDOW FILM

DRAFT

This document contains Performance Services Trade Secrets and Confidential information to be used by the addressee for evaluating the PSI proposal.
Addressee shall not disclose the Confidential information to third parties without written consent of Performance Services.

3M Science. Applied to Life.™

Virtually invisible insulation. Enhance comfort and efficiency year round with 3M™ Thinsulate™ Window Film Climate Control 75.

- Helps provide increased insulation performance, much like upgrading single pane to double pane and double pane to triple pane windows
- Helps improve comfort during cold winter months
- Heat rejection helps provide comfort and energy savings in summer months
- High visible light transmission film with a neutral appearance that helps maintain the building's existing appearance
- Helps extend the life of furnishings by significantly reducing harmful UV rays, the largest cause of fading
- Comprehensive warranty from 3M

Visible Light Transmission	★★★★★
Winter Insulation	★★★★★
Year Round Comfort	★★★★★

Best ★★★★★
Better ★★★★
Good ★★★
Fair ★★
Not Recommended ★
In comparison to other 3M™ Window Films

Thinsulate, insulation for your windows.

Valued Associations and Alliances:

CLINTON FOUNDATION | CLINTON CLIMATE INITIATIVE

ENERGY STAR PARTNER

EWFA EUROPEAN WINDOW FILM ASSOCIATION

IWFA INTERNATIONAL WINDOW FILM ASSOCIATION

RECOMMENDED SKIN CANCER FOUNDATION

U.S. GREEN BUILDING COUNCIL LEED USGBC

Climate Zone 6

Historic Minnesota Governor's Residence

1,000 sq ft installation of 3M™ Thinsulate™ Window Film Climate Control 75.

Customer Issues:

- Historic property that could not change the look of the building
- Single pane windows, caused cold, drafty areas
- Needed to meet state energy savings goals

Product Performance and Technical Data

Glass Type (All 1/4")	Film Type	Visible Light			Total Solar Energy Rejected	Solar Heat Gain Coefficient (G Value)	U Value		Heat Loss Reduction	Heat Gain Reduction	UV Light Rejected	Glare Reduction	Visible Light to Solar Heat Gain Ratio
		Reflected (interior)	Reflected (exterior)	Transmitted			btu/ hft²F	w/ m²K					
Clear	Thinsulate™ 75	12%	16%	74%	47%	0.53	0.63	3.6	40%	35%	99.9%	17%	1.4
Tinted	Thinsulate™ 75	10%	8%	44%	60%	0.40	0.63	3.6	40%	37%	99.9%	17%	1.1
Double Clear	Thinsulate™ 75	17%	21%	66%	49%	0.51	0.35	2.0	26%	27%	99.9%	16%	1.3
Tinted Clear	Thinsulate™ 75	15%	10%	40%	63%	0.37	0.35	2.0	26%	27%	99.9%	15%	1.1

LEED Certification

Window films may be used toward the following LEED credits

- SS-8
- MR 1.1-1.2
- EQ-7.1
- EQ-8.1-8.2
- EA-1
- MR 5.1-5.2
- EQ-7.2
- ID

Warranty and Limited Remedy: 3M warrants that each 3M product meets the applicable 3M product specification at the time 3M ships the product. 3M MAKES NO OTHER EXPRESS OR IMPLIED WARRANTIES OR CONDITIONS, INCLUDING ANY IMPLIED WARRANTY OR CONDITION OF MERCHANTABILITY OR FITNESS FOR A PARTICULAR PURPOSE. If the 3M product does not conform to this warranty, the sole and exclusive remedy is, at 3M's option, replacement of the 3M product or refund of the purchase price. **Limitation of Liability:** Except where prohibited by law, 3M will not be liable for any loss or damage arising from the 3M product, whether direct, indirect, special, incidental or consequential, regardless of the legal theory asserted.

3M

Renewable Energy Division
3M Center, Building 235-2S-27
St. Paul, MN 55144-1000
3M.com/windowfilm

3M and Thinsulate are trademarks of 3M.
Used under license in Canada.

Please recycle. Printed in the U.S.A.
© 3M 2016. All rights reserved.
98-0150-0845-5

UCRM 9: HVAC UPGRADES

DRAFT

This document contains Performance Services Trade Secrets and Confidential information to be used by the addressee for evaluating the PSI proposal.
Addressee shall not disclose the Confidential information to third parties without written consent of Performance Services.

D. DETAILED IMPLEMENTATION PLAN

- Preliminary Project Schedule

DRAFT

This document contains Performance Services Trade Secrets and Confidential information to be used by the addressee for evaluating the PSI proposal.
Addressee shall not disclose the Confidential information to third parties without written consent of Performance Services.

ID	% Complete	Task Name	Duration	Start	Finish	Predecessors
1	**0%**	**Hays County Energy Upgrades Project**	**242 days?**	**Mon 2/13/17**	**Tue 1/16/18**	
2	0%	Contract Issued	1 day	Mon 2/13/17	Mon 2/13/17	
3	0%	PSI Subcontracts Issued	10 days	Tue 2/14/17	Mon 2/27/17	2
4	0%	Engineering	20 days	Tue 2/28/17	Mon 3/27/17	3
5	0%	3rd Party Engineering Review	15 days	Tue 3/28/17	Mon 4/17/17	4
6	0%	Customer Review of Submittals	15 days	Tue 3/28/17	Mon 4/17/17	4
7	**0%**	**Improvement Measures**	**215 days**	**Tue 2/14/17**	**Mon 12/11/17**	
8	**0%**	**LED Lighting**	**182 days**	**Tue 2/14/17**	**Wed 10/25/17**	
41	**0%**	**Power Conditioning**	**70 days**	**Tue 2/28/17**	**Mon 6/5/17**	
57	**0%**	**Water Controls & Fixture Replacements**	**70 days**	**Tue 2/28/17**	**Mon 6/5/17**	
67	**0%**	**Building Automation System**	**152 days**	**Tue 2/28/17**	**Wed 9/27/17**	
95	**0%**	**Demand Response**	**155 days**	**Tue 2/28/17**	**Mon 10/2/17**	
105	**0%**	**Solar PV**	**160 days**	**Tue 2/28/17**	**Mon 10/9/17**	
113	**0%**	**Courthouse Window Restoration**	**205 days**	**Tue 2/28/17**	**Mon 12/11/17**	
119	**0%**	**HVAC & Plumbing Upgrades**	**110 days**	**Tue 2/28/17**	**Mon 7/31/17**	
130	0%	O&M Documentation	30 days	Mon 7/3/17	Fri 8/11/17	
131	0%	Punchlist	20 days	Tue 12/12/17	Mon 1/8/18	8,41,57,67,95,105
132	0%	Final Customer Review	5 days	Tue 1/9/18	Mon 1/15/18	131
133	0%	Project Completion	1 day?	Tue 1/16/18	Tue 1/16/18	132

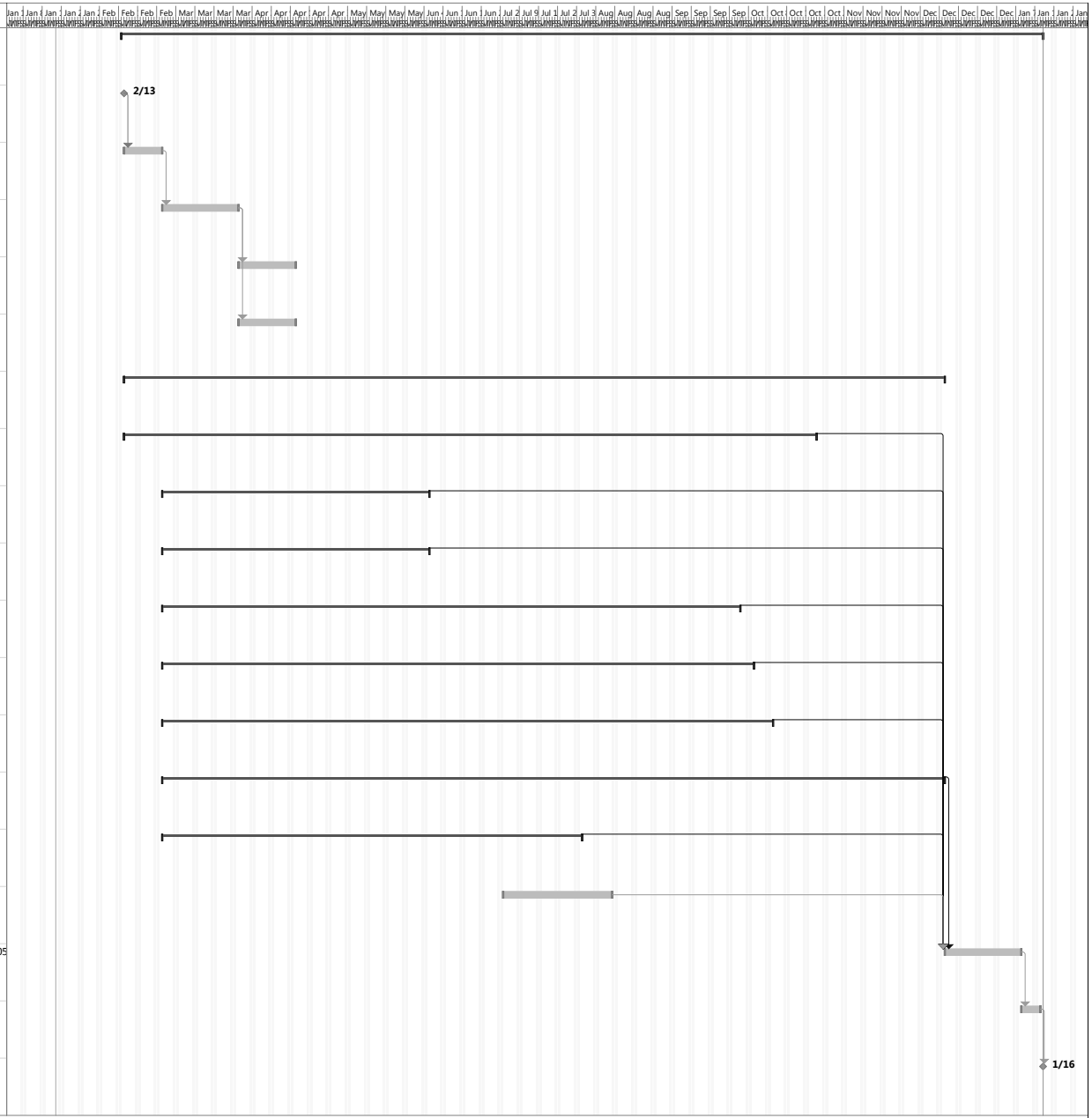

Project: Hays County Construct
Date: Fri 1/20/17

Task | Summary | Inactive Milestone | Duration-only | Start-only | External Milestone | Manual Progress
Split | Project Summary | Inactive Summary | Manual Summary Rollup | Finish-only | Deadline
Milestone | Inactive Task | Manual Task | Manual Summary | External Tasks | Progress

E. OTHER SUPPORTING DOCUMENTS

- Exhibit C - Measurement & Verification Plan
- Exhibit E - Sample Annual M&V Report

DRAFT

This document contains Performance Services Trade Secrets and Confidential information to be used by the addressee for evaluating the PSI proposal.
Addressee shall not disclose the Confidential information to third parties without written consent of Performance Services.

EXHIBIT B - PROJECT IMPROVEMENT LIST

PROJECT SCOPE

The following project scope matrix defines the project improvements being made at each building:

Matrix of Opportunities									
	1	2	3	4	5	6	7	8	9
Building	LED Lighting	Power Conditioning	Solar PV	Demand Response	Retro-Cx & BAS with Tridium Front End	Water Controls	Window Film	Window Restoration	HVAC & Plumbing Upgrades
Government Center	♦	♦	♦	♦	♦	♦			
Court House	♦	♦			♦		♦	♦	♦
Juvenile Detention	♦	♦		♦					
Development Services	♦	♦		♦	♦				
Health Department	♦	♦			♦				
Precinct 2	♦	♦			♦				
Precinct 3		♦			♦				
Precinct 4	♦	♦			♦				
Jacobs Well Natural Center	♦	♦			♦				
Jail	♦	♦	♦	♦	♦	♦			♦

UTILITY COST REDUCTION MEASURE (UCRM) & IMPROVEMENT SUMMARIES

LED Lighting

This UCRM considers replacement of the fluorescent, incandescent and HID lighting with LED lighting. Benefits include:

- High efficacy, low energy usage
- 70,000+ hour lamp life typically
- Ten year warranty on most product
- Improved illumination levels
- Improved lighting controls to reduce operational hours

A detailed scope of work for this measure follows:

- Retrofit and/or replace 3,461 fixtures at Government Center
- Install approximately 21 occupancy sensors at Government Center
- Retrofit and/or replace 324 fixtures at Court House
- Install approximately 0 occupancy sensors at Court House
- Retrofit and/or replace 515 fixtures at Juvenile Detention
- Install approximately 1 occupancy sensors at Juvenile Detention
- Retrofit and/or replace 277 fixtures at Development Services
- Install approximately 9 occupancy sensors at Development Services

- Retrofit and/or replace 162 fixtures at Health Department
- Install approximately 0 occupancy sensors at Health Department
- Retrofit and/or replace 289 fixtures at Precinct 2
- Install approximately 1 occupancy sensors at Precinct 2
- Retrofit and/or replace 115 fixtures at Precinct 4
- Install approximately 0 occupancy sensors at Precinct 4
- Retrofit and/or replace 27 fixtures at Jacobs Well Nature Center
- Install approximately 0 occupancy sensors at Jacobs Well Nature Center
- Retrofit and/or replace 1552 fixtures at the Jail
- Install approximately 0 occupancy sensors at the Jail
- Provide one percent spare lamps and/or drivers
- All material made obsolete during this work will be disposed of according to state and local requirements.
- Provide one percent spare lamps and/or drivers
- All material made obsolete during this work will be disposed of according to state and local requirements.

Power Conditioning

This UCRM considers installation of a total of approximately 19 power conditioners with modular capacitance (where applicable) to improve power factor making your motor load run cooler and more efficiently. This results in a reduction in energy consumption and an extension of the useful life of your motor load. The Power Conditioning System will also provide harmonic filtration to mitigate harmonic distortion and recycle waste energy resulting in reduced energy consumption which prolongs the longevity of electrical equipment.

Lastly, the Power Conditioning System with its industrial grade metal oxide varistors (MOVs) protects electrical equipment from transient electrical equipment.

A detailed scope of work for this measure follows:

- Installation of approximately 6 power conditioning panels at Hay's Government Center
- Installation of approximately 3 power conditioning panels at Hay's County Juvenile Detention
- Installation of approximately 3 power conditioning panels at Hay's County Jail
- Installation of 1 power conditioning panel at each of the following buildings: Court House, Development Services, Health Department, Precinct 2, Precinct 3, Precinct 4, Jacob's Well Nature Center

Solar PV

This UCRM includes installing an approximately 499 kW dc photovoltaic solar array on the roof of the Government Center and an approximately 241 kW dc photovoltaic solar array on the ground adjacent to the Jail.

Demand Response

The following is a summary of the scope of this UCRM:

- Add remote start/stop controls and notification to 750 kW standby generator at Government Center and an automatic transfer switch to power additional building load
- Add remote start/stop controls and notification to 125 kW standby generator at Juvenile Detention
- Replace existing 600 kW standby generator at Jail with a new 600 kW standby generator with remote start/stop controls and notification. Scope to include new automatic transfer switch and distribution panel which will allow the new generator to power building HVAC loads as well as life safety loads
- Install new 100 kW standby generator at Development Services with remote start/stop controls and notification. New generator to power office building and diesel pumps.
- Train staff on ERS demand response process

Retro-commissioning and Building Automation System with Tridium Front End

This UCRM proposes to implement a retro-commissioning program at the Government Center. This program will combine aspects of controls optimization, retro-commissioning, and new construction commissioning. The following standards of comfort and control strategies will be applied:

Cooling

Setpoint	Default Value
Occupied Cooling Setpoint	74°F (Except 3rd floor court rooms)
Occupied Cooling Setpoint	69°F (3rd floor court rooms)
Unoccupied Cooling Setpoint	90°F

Heating

Setpoint	Default Value
Occupied Heating Setpoint	70°F (Except 3rd floor court rooms)
Occupied Heating Setpoint	67°F (3rd floor court rooms)
Unoccupied Heating Setpoint	50°F

- Optimize use of natural gas heating
- Optimize use of outdoor air using CO2 sensors and occupancy schedule
- Reset minimum VAV box airflows from 40% to 20%
- Identify failed sensors and HVAC equipment

Tridium User Interface

Additionally, this UCRM includes replacing the existing JCI Metasys user interface with a new Tridium user interface. Project details follow:

1. Replace JCI NAE controllers with JACE controllers

2. Convert Metasys databases into a database that fits into the Tridium JACE FX platform by using your current DDL files
3. Create new web based user interface that will be accessible from iOS and Andriod devices as well as Apple computers and Windows based PCs
4. Integrate in other Hays County building automation systems being installed as part of this project
5. Replace approximately 40 temperature sensors with temperature sensors with system override buttons

HVAC Modifications

Currently the Hays County Government Center third-floor courtrooms must be set to 67 degrees Fahrenheit to maintain a comfortable temperature. Also in the Courthouse there are two units that are beyond their useful lives and two units in very confined spaces. To correct these issues new HVAC equipment would need to be installed.

In the Hays County Government Center third-floor we interviewed staff and found that the HVAC would not respond to increases in temperature based on full occupancy. Running multiple calculations we confirmed that if the spaces were full to capacity to space temperature would drift up into uncomfortable temperatures. To resolve this PSI will replace 18 VAV boxes with larger boxes, rebalance the third-floor and reset min/max airflow throughout the third-floor.

Energy savings calculations are documented in the appendix and additionally were calculated using engineering spreadsheet and checked using the latest version of eQuest (3.64). Prior to calculating savings, baseline models were constructed that provided statistically valid baseline matches.

Server Room Modifications

The Government Center IT Server room is served by three Data Aire split-systems which provide space cooling to the IT Server room. Although cooling capacity is sufficient the diffusers suppling the air and return grilles are designed to cool the space not the server racks. This creates hot and cool spots throughout the server room and requires the space to over cooled.

By changing the diffusers and changing the current server racks with racks design to provide laminar air-flow through the server's, hot spots will be reduced providing better server performance and safety for the county's valuable server capacity.

Three sets of racks will need to be changed at a time to provide continuous service for the County. The County will need to provide for disconnecting, moving and reconnecting all components in each rack.

Lastly, this measure includes repairing of exterior refrigerant line insulation.

DRAFT

Training will be provided by PSI to County personnel to properly follow the requirements of using the new server racks.

Energy savings, albeit relatively small, will result from this design change. The primary purpose for making this design change is to minimize the risk of server overheating and downtime.

Building Automation System Description

The HVAC systems at the following buildings are controlled by stand-alone programmable thermostats:

Building Name	Address	HVAC Type	HVAC Controls
Court House	111 E. San Antonio St, San Marcos, TX 78666	4-Trane Split Systems, 3-Trane Package Units	Prog. T-Stat
Juvenile Detention	2220 Clovis Barker Road, San Marcos, TX 78666	RTUs	Prog. T-Stat
Development Services	2171 Yarrington Road, San Marcos, TX 78666	13-Trane Split Systems	Prog. T-Stat
Health Department	401-A Broadway, San Marcos, TX 78667	5-Trane Split Systems	Prog. T-Stat
Precinct 2	5458 FM 2770, Kyle, TX 78640	12-Trane Split Systems	Prog. T-Stat
Precinct 3	200 Stillwater Drive, Wimberley, TX 78676	2-Split Systems, 5 Rooftop Units	Prog. T-Stat
Precinct 4	195 Roger Hanks Parkway #3, Dripping Springs, TX 78620	4-Trane Split Systems	Prog. T-Stat
Jacobs Well Natural Center	830 Jacobs Well Road, Wimberley, TX 78676	1-Goodman Split System	Prog. T-Stat
Jail	1307 Uhland Road, San Marcus, TX 78666	30 RTUs	Prog. T-Stat

This UCRM replaces the existing obsolete thermostats, with a native BACnet, smart thermostats that function as a simplified building automation system (BAS). These smart thermostats will be integrated into a common Tridium user interface along with the BAS serving the Government Center. Native BACnet thermostats will be installed at the following buildings:

- Court House (Seven new stats and three averaging temperature sensors)
- Development Services (13 new stats)
- Health Department (Five new stats)
- Precinct 2 (12 new stats)
- Precinct 3 (Seven new stats)
- Precinct 4 (Four new stats and two averaging temperature sensors)
- Jacob's Well Natural Center (One new stat)

At these sites, existing thermostats will be removed from the building except for server room thermostats. The new smart thermostats/BAS will provide for scheduling, trending, alarms and graphics of the equipment in the building. The scope of this upgrade includes the installation of smart thermostats for the equipment listed below:

- 41 Split systems 2.5 tons and larger
- Three Package rooftop units

Temperature Averaging at Court House

Hays County Courthouse has been retrofitted with an air-conditioning system which is split into several zones. Each zone provides heating and cooling as needed, however the zones include tenants with different cooling needs. As a result, one tenant may be hot and another cold. By installing an additional four additional temperature sensors and averaging the temperature within these zones, occupants can work in a more comfortable environment, without the need to over-cool the space and use electric heaters for individual comfort. It is important to point out that while temperature averaging will help address comfort issues, it will not completely resolve them. To completely address comfort issues, additional zoning would need to be added within the Court House.

Energy savings will be realized through temperature set-point adjustments and optimized equipment operation according to occupancy and load conditions. The proposed BAS system will be capable of providing all commonly used energy conservation control strategies. The types of energy management and control sequences to be employed include:

Optimized Mechanical System Schedules

The air handling units are currently operating 24x7 to maintain the desired temperatures in each area. The new BAS will enable scheduling of equipment to reduce operating hours while still maintaining the building comfort during occupied times. Unoccupied times for each day will be identified by the property manager and trends will be utilized to ensure set points are achieved at the start of each occupied period.

Space Temperature Set-point Scheduling

The required space conditions in the buildings can be changed based on the occupancy schedule. During periods when the building is unoccupied, the set-points would be adjusted to a level so that desired space conditions can be recovered at the beginning of the next occupancy period. This ECM will work with the building management groups to clearly define both the occupancy schedules and space conditions that should be maintained for each building area. The BAS will maintain the set-points and schedules.

During unoccupied periods, the HVAC equipment will operate only when required to maintain conditions at the unoccupied set-point. Additionally, exhaust fans will only be operated during occupied periods.

DRAFT

Outside air ventilation will be eliminated during unoccupied periods. Optimum start routines will be used to delay the recovery period as long as possible based on outdoor air conditions and historical performance data.

Cooling

Setpoint	Default Value
Occupied Cooling Setpoint	74°F
Unoccupied Cooling Setpoint	90°F

Heating

Setpoint	Default Value
Occupied Heating Setpoint	70°F
Unoccupied Heating Setpoint	50°F

The scope of this UCRM at the Hays County Jail includes replacing existing thermostats with a comprehensive, native BACnet BAS. This new BAS will have a Tridium user interface and will be integrated into a multiple building Tridium front end located at the Government Center. In addition to occupancy schedule and set-point temperature optimization, we will address the following additional BAS features at the Jail:

Economizer Control

Some of the existing air conditioning units are equipped to use outside air for cooling when outdoor air conditions permit, however, not all of these units operate properly. The BAS would take over this control so that the system will monitor the outdoor air conditions and modulate the outdoor air and return air dampers to provide a mixed air temperature acceptable for cooling conditions. Economizer control would be done by monitoring outdoor air temperature. When outdoor temperature is below 55°F, economizer control is enabled, the outdoor air and return dampers are positioned to maintain a 55°F mixture, and the mechanical cooling is disabled or at least minimized.

Supply Air Temperature Reset

Space temperature will be maintained by supply air temperature reset. Use of supply air temperature reset can increase comfort levels and save energy.

Demand Controlled Ventilation

Existing air conditioning unit outdoor air dampers have minimum position settings to bring in minimum outdoor air for ventilation based on the design maximum number of people in the area served by the system on a continuous basis. Installation of carbon dioxide sensors in the space or return air will allow control of outdoor air dampers to provide the required amount of ventilation air to maintain the level of carbon dioxide (CO_2) below the recommended level. Outdoor air will be adjusted to the required amount for the number of people in the conditioned area on a real time basis. Heating and cooling of excess outdoor air will be eliminated, therefore yielding substantial savings.

Controlled Building Exhaust

Existing building exhaust fans operate 24 hours per day, seven days a week throughout the year. During unoccupied periods when building HVAC systems are off, operation of building exhaust fans results an excessive and uncontrolled infiltration of outdoor air.

The BAS will be used to control the five primary exhaust fans so that they only operate when building HVAC systems are in use.

Smoke Exhaust Fans

The BAS will integrate control of the smoke exhaust fans with the associated air handling units. Control will be provided through the BAS.

Water Controls

A detailed scope of work for this UCRM follows:

Government Center Scope of Work

High Efficiency Urinal (HEU) Retrofit

Recommendation: HEUs are available that use a maximum of one pint per flush (0.125 gpf), or 87.5% less water than standard 1.0 gpf urinal. With the passage of the 1992 Energy Policy Act, 1.0 gpf urinals became the standard in the United States. New Standards developed by the EPA WaterSense Program are being adopted by the majority of plumbing manufacturers. PSI recommends 0.125 gpf over waterless urinals because of possible sediment and other maintenance issues that arise with waterless urinals.

The recommendation involves removal of 17 high flow urinals flush valves with a flush volume of 1.0 gpf. This recommendation includes replacing flush valves with 0.5 gpf valves, which is necessary to ensure that the fixtures work with maximum efficiency. Failure to install the correct valve can result in sedimentation of the drain line and other components.

High Efficiency Lavatory Faucet Aerator Retrofit

Recommendation: High efficiency aerators for lavatories typically use 0.5 gpm or less. The recommended action involves replacing 111 lavatory faucet aerators that have a flow rate of 2.2 gpm or greater with new high efficiency aerators having flow rates of 0.5 gpm or less.

High Efficiency Utility Faucet Aerator Retrofit

Recommendation: High efficiency aerators for utility faucets typically use 2,25 gpm or less. The recommended action involves installing four high efficiency aerators on kitchen/break room faucets. It is recommended that the faucets be fitted with high efficiency aerators with flow rates not to exceed 2.25 gpm.

High Efficiency Kitchen Faucet Aerator Retrofit

Recommendation: High efficiency aerators for kitchens and break rooms typically use 1.5 gpm or less. The recommended action involves installing 19 high efficiency aerators on kitchen/break room faucets. It is recommended that the faucets be fitted with high efficiency aerators with flow rates not to exceed 1.5 gpm.

Hays County Jail Scope of Work

High Efficiency Toilet (HET) Retrofit

Recommendation: HETs use a maximum of 1.28 gpf, or 20% less water than standard 3.5 gpf toilets. With the passage of the 1992 Energy Policy Act, 1.6 gpf toilets became the standard in the United States. The State of Texas now requires all toilets sold on or after January 1, 2014 to operate at 1.28 gpf or less.

The recommendation involves removal of all existing toilets with flush volumes of 1.6 gpf or greater and replacement with HETs (a total of 15 toilets). This recommendation includes replacing all porcelain and flush valves, which is necessary to ensure that the fixtures work with maximum efficiency.

High Efficiency Detention Flush and Lavatory Valve (HEDFR) Retrofit

Recommendation: HEDFRs use a maximum of 1.6 gpf, or less than 50% of the water used by the standard 3.5 gpf toilets.

The recommendation involves installation of an intelligent plumbing system having three (3) basic components on 155 toilets/Lavatories and 54 showers:

1. Controller
2. Pressure Activated Sensor
3. Valve (Lavatory, Flush, Shower, Etc.)

The electronic controller is the master control device in the water conservation system. It uses a microprocessor that's programmed at the factory with run-times, delays, lockout periods, etc., all designed to discourage misuse and conserve water. Savings are seen in the reduction of: Water used; sewage costs; and costs attributed to vandalism. A total of six remote control stations are included in this scope.

The pressure activated sensors, commonly called "buttons", have a housing made of solid stainless steel with the pressure activation circuitry potted and completely waterproof. The sensor is activated when 4-12 oz. of pressure is applied to the face of the button.

DRAFT

The valves can adapt to existing plumbing systems or can be piped in for new applications. Flush valves can be located remotely while maintaining proper gallons per flush requirements.

High Efficiency Lavatory Faucet Aerator Retrofit

Recommendation: High efficiency aerators for lavatories typically use 0.5 gpm or less. The recommended action involves replacing 32 lavatory faucet aerators that have a flow rate of 2.2 gpm or greater with new high efficiency aerators having flow rates of 0.5 gpm or less.

Window Restoration

The following is a summary of the scope of this UCRM:

Restoration Methodology and Scope of Work: Sashes, inner stop and parting bead will be removed and transported to the restorer. The current blinds will be removed at this time, labeled and stored onsite. The openings will be sealed using plywood. Once sashes are removed the window jambs will be thoroughly examined. Window jamb and sill repairs will be done onsite.

Jamb/sill prep and paint will be completed whiles sashes are removed. In the shop, sashes and stop will be placed in a steam oven to remove all paint and glazing; then sanded, primed, painted, glazed and slotted for weather stripping. A borate based preservative (Boracare) will be applied to all bare wood prior to paint application. This will minimize the risk of future rot or pest damage to the wood. New concealed interlocking weather stripping will be installed when the sashes are reinstalled – this will seal each sash at sides, bottom and meeting rail to minimize air and noise infiltration and allow for normal function of the window. Sashes will be installed with some new parting bead and original inner stop. Jamb and brick mold will be painted but not interior window trim. Existing sash chain will be reused. Only the bottom sash will function, the top sash will be fixed. The workmanship will be warrantied for 10 years to exclude paint and glazing. Warranty from subcontractor.

Scope includes restoration of 89 windows at the Hays County courthouse.

Window Film

The Hays County Courthouse windows are historic, clear single pane glass. Compared to modern windows, these windows do not reject as much solar heat and have a higher emissivity. Window glass is by nature highly thermally emissive. To improve thermal control (insulation and solar optical properties), window film will be applied to a total of 185 window panes. Window film will not be installed on a total of 16 window panes due to prevent potential damage to windows with wire in the glass.

HVAC and Plumbing Upgrades

DRAFT

In the Courthouse, there are two (2) 7.5 split-system units that serve the basement area and IT servers in this building that are over 15 years old and are beyond their recommend useful life. There are also two (2) 15 ton split-systems that serve primarily the second floor that are very difficult to service due to the very limited access these units. Additionally, these units have become relatively expensive to maintain due to various mechanical system failures over the last two years.

This measure considers replacing the four split-systems with new, high efficiency units having the same nominal cooling/heating capacities. Additionally, PSI recommends installing AC-1 and AC-2's new air handling units in the open ceiling space to improve maintainability.

Additionally, this measure includes replacing 16 old copper p traps with new copper p traps at the Jail. Replacement is need to due to pipe age and condition.

DRAFT

Exhibit C

Measurement and Verification Plan

Pursuant to the terms of that certain Energy Performance Contract between Hays County ("HC") and Performance Services, Inc. ("ESCO") dated _____ (the "Contract"), ESCO shall perform the energy and water savings measurement and verification as defined within this Measurement and Verification Plan (the "Plan"). ESCO shall also coordinate the Plan with the M&V Consultant, as defined in the Contract. ESCO and the M&V Consultant shall work to resolve any issues with respect to the Plan to the reasonable satisfaction of HC.

GUARANTEED SAVINGS ESCO shall guarantee energy savings ("Energy Savings") pursuant to the terms of Exhibit D to the Contract, the Performance Guarantee Agreement (the "Guarantee"). The term of the Plan shall equal the term of the Guarantee. Energy Savings are calculated based on the installation of Utility Cost Reduction Measures ("UCRMs") which are designed to reduce electric consumption (kWh), reduce natural gas consumption (CCF), and reduce water/sewer usage (kgal).

Operational savings ("Operational Savings") for maintenance, as identified and calculated in Exhibit A to the Contract, Utility Assessment Report (the "UAR"), are agreed to and stipulated by HC for the term of the Guarantee. ESCO and HC agree for the term of the Guarantee that the annual Utility Rate escalation factor will be 0% for electricity, natural gas, water and sewer.

Energy Savings and Operational Savings shall be collectively referred to herein as "Guaranteed Savings".

Schedule A of the Plan contains the methodology and calculations used to determine Guaranteed Savings achieved as a result of the installation of the UCRMs, as well as the methodology that ESCO will use to measure, verify, and report on Guaranteed Savings achieved annually during the term of the Guarantee.

DRAFT

Pursuant to the Guarantee, Guaranteed Savings are as follows:

TABLE 1 – GUARANTEED SAVINGS

UCRM No.	UCRM Title	ANNUAL SAVINGS							Total Savings
		Electric Energy (kWh/yr)	Electric ($/yr)	Natural Gas (CCF/yr)	Natural Gas ($/yr)	Water/Sewer (kgal/yr)	Water/Sewer ($/yr)	Other Savings	
1	LED Lighting	1,190,455	$103,024	0	$0	0	$0	$39,687	$142,711
2	Power Conditioning	185,335	$15,207	0	$0	0	$0	$0	$15,207
3	Solar PV	987,790	$87,965	0	$0	0	$0	$0	$87,965
4	Demand Response	0	$0	0	$0	0	$0	$27,450	$27,450
5	Retro-Cx & BAS with Tridium Front Er	587,793	$47,056	0	$0	0	$0	$0	$47,056
6	Water Controls	0	$0	7,864	$5,112	8,096	$100,181	$0	$105,293
7	Window Film	9,152	$752	0	$0	0	$0	$0	$752
8	Window Restoration	3,480	$307	0	$0	0	$0	$24,990	$25,296
9	HVAC & Plumbing Upgrades	6,012	$530	0	$0	0	$0	$0	$530

TABLE 2 – ANNUAL SAVINGS

Year	Annual Savings				
	Electricity (kWh) $	Natural Gas (Therm) $	Water/ Sewer $	Other Savings $	Total Savings $
1	$254,841	$5,112	$100,181	$92,127	$452,260
2	$259,938	$5,214	$102,185	$92,127	$459,463
3	$265,136	$5,318	$104,228	$92,127	$466,809
4	$270,439	$5,425	$106,313	$92,127	$474,303
5	$275,848	$5,533	$108,439	$92,127	$481,947
6	$281,365	$5,644	$110,608	$92,127	$489,743
7	$286,992	$5,757	$112,820	$92,127	$497,695
8	$292,732	$5,872	$115,077	$92,127	$505,807
9	$298,586	$5,989	$117,378	$92,127	$514,080
10	$304,558	$6,109	$119,726	$92,127	$522,519
11	$310,649	$6,231	$122,120	$52,440	$491,440
12	$316,862	$6,356	$124,563	$52,440	$500,220
13	$323,200	$6,483	$127,054	$52,440	$509,176
14	$329,664	$6,613	$129,595	$52,440	$518,311
15	$336,257	$6,745	$132,187	$52,440	$527,628
16	$342,982	$6,880	$134,831	$27,450	$512,142
Total	$4,407,066	$88,399	$1,732,474	$1,183,463	$7,411,402

Table 3 below provides the annual fees for the Plan:

TABLE 3 – ANNUAL M&V FEE

Year	Annual Costs	
	PSI M&V Cost	Total M&V Cost
1	$24,040	$24,040
2	$24,521	$24,521
3	$25,011	$25,011
4	$25,511	$25,511
5	$26,022	$26,022
6	$26,542	$26,542
7	$27,073	$27,073
8	$27,614	$27,614
9	$28,167	$28,167
10	$28,730	$28,730
11	$29,305	$29,305
12	$29,891	$29,891
13	$30,489	$30,489
14	$31,098	$31,098
15	$31,720	$31,720
16	$32,355	$32,355
Total	$415,734	$415,734

DRAFT

INFORMATION AND ITEMS TO BE FURNISHED BY HC:

HC shall furnish to ESCO any design, construction, maintenance or operating documents/manuals; utility billing data for electricity and natural gas consumption, bills and other information necessary to provide services under the Plan. To the fullest extent possible, information shall be delivered or made available in electronic media form and universal file formats (Text, comma delimited files, PDF, JPEG).

During the term of the Plan, HC shall furnish a secure area for the storage of required materials and provide and arrange access for ESCO to such secure area as may be necessary for expeditious and orderly performance of the services under the Plan.

UTILITY RATES AND BASELINE ASSUMPTIONS:

The Guaranteed Savings shall be based on the utility cost per unit established and agreed to by both parties which is defined in the Energy, Water and O&M Rate Data section of the Plan. For each year, the dollar savings shall be calculated based on the baseline unit cost of electricity and natural gas as defined within Schedule A of the Plan. These and other baseline assumptions used

to calculate the Guaranteed Savings are documented in the UAR and Schedule A of the Plan. This includes, but is not limited to, assumptions about facility usage, occupancy, operating schedules, standards of comfort and continuance of the current physical plant and facility layout, configuration and equipment. Changes to any or all of these assumptions will be cause for adjustment of the Guaranteed Savings baseline as agreed to by both parties.

BASELINE CONDITIONS:

The baseline conditions for calculation of the Guaranteed Savings are set forth in Schedule A of the Plan. In the event that the actual conditions vary from the baseline conditions during the term of the Guarantee, the Guaranteed Savings calculations shall be adjusted to reflect the new baseline conditions.

ANNUAL REPORT:

ESCO will prepare and submit to HC an annual report within ninety (90) days of the anniversary of commencement date of the Plan. A sample annual report has been included within the Appendix of the UAR.

FEES AND PAYMENTS:

HC shall pay ESCO an annual fee for the performance of the services described in the Plan, pursuant to Table 3 above (the "M&V Fee"). ESCO shall invoice HC for the M&V Fee semi-annually in advance. Failure to pay the M&V Fee shall be grounds for termination of the Guarantee by ESCO.

MANNER AND TIME OF PAYMENT:

The invoice shall be supported by such documents as HC shall reasonably require. Payment shall be due thirty (30) calendar days after the invoice date.

In the event that HC, in good faith, disputes any portion of the invoice, HC shall advise ESCO in writing of the disputed portion and the undisputed portion of the invoiced amount shall be due thirty (30) calendar days after the invoice date. HC's liability for non-payment shall be governed in accordance with the Texas Prompt Payment Act.

SHORTFALL PAYMENT:

Within ninety (90) days after the completion of each annual period and receipt by ESCO of all required information, ESCO shall submit to HC an annual Report verifying and supporting the actual savings achieved for the preceding annual period and comparing it to the Guaranteed Savings. The Report shall include measurements, documentation and savings calculations used to support the reported savings for the period. Any shortfall in savings for an annual period shall be specifically identified in the Report, and any shortfall amount shall be paid by ESCO to HC

within thirty (30) days of the submission of the annual Report. The maximum shortfall in any one-year period is limited to the annual guaranteed energy savings amount identified in Table 2.

EARLY TERMINATION OF M&V:

HC, at its sole discretion, may elect to terminate the Plan and the Guarantee after the end of the first year. Any such termination of the Plan and the Guarantee shall be submitted in writing by an authorized agent of HC to ESCO. Upon receipt of such termination, ESCO shall have no further obligations or liability with respect to the Plan or the Guarantee.

MATERIAL CHANGES TO UCRM:

From time to time, HC may need to make changes or modifications to its facilities, which may affect the Plan and/or the Guarantee. Minor changes to facilities can be accommodated by means of a baseline and or savings adjustment, subject to agreement by both parties. Any major change affecting more than 25% of the Guaranteed Savings for any given UCRM or facility or more than 10% of the total Guaranteed Savings shall be classified as a "Material Change" and shall be cause for full or partial termination of the Plan and Guarantee.

Upon formal notification of a qualifying Material Change by HC, ESCO will prepare and submit, within 30 days, a termination proposal for the Guarantee and the Plan, which shall be reasonably agreed to by the parties.

EQUIPMENT MAINTENANCE AND OPERATION RESPONSIBILITY:

HC agrees to maintain its facilities, including the physical plant and all existing equipment / systems affecting energy efficiency, such that the condition of the facilities during the term of the Guarantee is at least equal to their condition at the completion of this Contract. HC also agrees to properly maintain (in accordance with manufacturer's guidelines and specifications) all new and existing equipment and operate all new and existing systems as described in the Proposal, Contract and Guarantee. If HC fails to operate its facilities as described herein and such failure results in reduced Energy Savings or Operational Savings, then the Guarantee and the Plan shall be adjusted accordingly.

DRAFT

BASELINE ENERGY CONSUMPTION & METHODS TO ADJUST

The Baseline for Energy and Water/Sewer annual consumption has been established through analysis of utility billing data and analysis of data trends acquired by Performance Services during the UAR. The following table contains the agreed upon baselines for this project.

TABLE 4 - ENERGY AND WATER/SEWER BASELINE

Building		Baseline Consumption - 12 months			
Name	Gross sq. ft.	Electricity (kWh)	Natural Gas (CCF)	Sewer (kgal)	Water (kgal)
Government Center	236,000	4,195,000	3,473	912	2,822
Court House	21,396	271,680	1,265	46	46
Juvenile Detention	43,222	815,616	13,693	2,497	2,497
Development Services	14,058	206,200	0	84	84
Health Department	13,327	244,338	0	84	84
Precinct 2	14,174	154,234	0	56	56
Precinct 4	6,272	101,600	0	75	75
Jacobs Well Natural Center	2,400	19,000	0	115	115
Jail	83,306	1,981,920	64,840	17,500	17,500

Methods to Adjust Energy Consumption

Adjustments

In the basic equation used to determine savings shown below (General Savings Equation), adjustments are sometimes required to account for changes unrelated to the UCRM that affect energy use. Such adjustments may account for changes in weather, occupancy, or other factors between the baseline and performance periods.

General Savings Equation:

$$Savings = (Baseline\ Energy - Post\ Installation\ Energy) \pm Adjustments$$

The purpose of adjustments is to express both baseline and post-installation energy under the same set of conditions. The modifications to the savings can be further distinguished as routine and non-routine adjustments, as shown in the Expanded Energy Savings Equation.

Energy Savings Equation:

$$Savings = (Baseline\ Energy - Post\ Installation\ Energy) \pm Routine\ Adjustments \pm Non\ Routine\ Adjustments$$

Routine Adjustments

Routine adjustments are used to account for expected variations in independent variables and energy use. These adjustments often use regression analysis to correlate and adjust energy use to independent variables such as weather, but simple comparisons may also be employed. Routine adjustments are used to normalize energy use as a function of one or more independent parameters such as temperature, humidity, or meals served.

Normalizing energy savings to a prescribed set of conditions is a very important technique used in ESPC projects. Using a fixed set of conditions for both the baseline and performance period cases, such as average weather conditions and the corresponding cooling load profile, allows the risks associated with these operational factors to be reduced.

Alternatively, baseline and performance period conditions could be normalized to either baseline or performance period conditions. If performance period conditions are used to adjust the baseline case, the savings calculated will estimate the actual avoided energy use for that period.

One of the key assumptions made when normalizing savings is that the performance period energy use will have a predictable relationship to the independent variables to be standardized. The baseline model will be completely defined in the contract, but the performance period model will need to be developed from measured data collected during the performance period. Typically, a valid baseline model indicates that a similar performance period model can be successfully developed.

Once the baseline and performance period models of the equipment's energy consumption and the parameter(s) are established and validated, the standardized values of the independent parameters can be used to drive the both models and calculate savings.

Therefore, a project-specific M&V Plan should identify critical independent variables, explain how these variables will be measured or documented, and discuss how they will be used in the empirical models. Additionally, assumptions and mathematical formulas used in the M&V Plan must be clearly stated, and the validity of any mathematical model used should be verified.

Non-Routine Adjustments

Non-routine adjustments are used to compensate for unexpected changes in energy driving factors, such as facility size, operating hours, and facility use. These factors must be monitored for change to ensure that they are not affecting the performance of the energy conservation measure. Tracking these factors is primarily a concern for projects using whole-building options (Options C & D). Option A approaches typically avoid these types of adjustments as many of the factors that could change are stipulated. If future changes are expected, the M&V Plan should incorporate methods for making these non-routine adjustments.

Interactive Effects

It is commonly understood that UCRMs and energy systems interact with one another. Reduced lighting loads, for example, can reduce air conditioning energy consumption (a cooling bonus), but increase heating consumption (a heating penalty).

Whole-building M&V approaches such as building simulation or utility billing analysis account for these types of interactive effects, whereas retrofit isolation M&V approaches do not.

When using retrofit isolation M&V Options A and B, careful consideration must be given to dealing with interaction between UCRMs. One must properly account for interactive effects and avoid double-counting of savings, which can occur inadvertently if interactions are not carefully considered.

Care must be taken to account for the reduced cooling loads on both the new and existing chillers due to the change in lighting. In addition, the cooling bonus should be based on the efficiency of the new chiller. In general, the possibility of double-counting energy savings can be reduced by considering one UCRM at a time.

The later UCRMs should start (the baseline condition) from the performance period condition of the previous UCRMs. For related UCRMs, such as lighting efficiency and lighting controls, double-counting can sometimes be avoided by using a single equation to determine savings from both measures.

Methodologies for determining some of the more common interactions, such as lighting and HVAC, have been developed. However, detailed relationships between many dissimilar but interactive UCRMs are not known, and the methods for measuring interactive effects are not cost-effective for many applications. For projects using retrofit isolation approaches (Options A or B), one of three approaches can be taken to account for savings associated with interactive effects between UCRMs. These approaches are as follows:

- Ignore interactive effects.
- Use mutually agreed-upon values that are based on the site-specifics of the building and HVAC equipment types. The values can be developed on the basis of computer model simulations for typical building conditions or assigned on the basis of available information for typical buildings.
- Develop a site-specific method to measure and estimate interactive effects. The federal agency and/or ESCO will need to agree on the merit and reasonableness of the proposed approach, which may include directly measuring the effects.

SCHEDULE A – MEASUREMENT & VERIFICATION

The purpose of the Measurement and Verification (M&V) Plan is to establish the method by which the calculated energy savings for the project are proven. Hays County shall provide Performance Services with the necessary data, including utility bills, and access to buildings and equipment proposed to be installed under the Scope of Work. Hays County will also provide access to building automation system information and any other facility Operating and Maintenance data as needed in order for Performance Services to perform the M&V as described herein. Preferably, all requested building automation system data will be pushed electronically to Performance Services ftp site for this project.

For this energy conservation project, Performance Services proposes to use a combination of M&V methodologies based on end use measurement (retrofit isolation) and building energy simulation to verify the estimated savings set forth in the proposal for this project. Performance Services has during the UAR, and will continue to make use of a variety of building environment and equipment end use measurement options including one-time instantaneous and short-term continuous measurements as a means to verify specific performance criteria set forth in this M&V plan. If performance test conditions do not allow for certain prescribed measurements to be made, then alternative M&V methods may be proposed for agreement by the parties. Performance Services utilizes the DOE sponsored International Performance Measurement & Verification Protocol (IPMVP EVO 10000.1 January 2012), and the FEMP M&V Guidelines: Measurement and Verification for Federal Energy Projects Version 3.0 (2008) as references for this M&V plan.

There are essentially two types of measurement procedures: retrofit isolation methods and whole building analysis methods. The retrofit isolation methods are called Option A - Retrofit Isolation with Key Parameter measurement and Option B - All Parameter Measurement options, respectively. The building analysis options are called: Option C, Utility Bill Analysis, and Option D, Calibrated Simulation, respectively. The last two options could be used to measure specific pieces of equipment and hence specific retrofits, if the meter being used in the analysis serves only the impacted piece of equipment. The following are summary descriptions of these M&V approaches based on the reference documents.

OPTION A – Retrofit Isolation with Key Parameter Measurement

Option A is an approach designed for projects in which the potential to generate savings must be isolated and verified, but the actual savings can be determined from short-term measurements, estimates, and engineering calculations. Performance period energy use is not measured throughout the term of the contract. Performance period energy use and baseline energy use are predicted using an engineering or statistical analysis of information that does not involve long-term measurements.

Option A savings are determined by field measurement of the key performance parameter(s) which define the energy use of the energy conservation measure's (ECM) affected system(s) and/or the success of the project. Parameters not selected for field measurement are estimated. Estimates can be based on historical data, manufacturer's specifications, or engineering judgment. Documentation of the source or justification of the estimated parameter is required.

Typical applications may include a lighting retrofit, where the power drawn can be monitored and hours of operation can be estimated.

OPTION B - Retrofit Isolation with All Parameter Measurement

M&V Option B is a retrofit isolation or system-level approach. The approach is intended for retrofits with performance factors (e.g., end-use capacity, demand, power) and operational factors (lighting operational hours, cooling ton-hours) that can be measured at the component or system level and where long-term performance needs to be verified. It is similar to Option A, but uses periodic or continuous metering of all energy quantities, or all parameters needed to calculate energy, during the performance period. This approach provides the greatest accuracy in the calculation of savings, but increases the performance-period M&V cost.

The Option B approach ensures the same items as Option A, but also:

- Determines energy savings using periodic or continuous measurement of energy use or all parameters needed to calculate energy use during the term of the contract.
- Option B is typically used when any or all of these conditions apply:
- For simple equipment replacement projects with energy savings that are less than 20% of total facility energy use as recorded by the relevant utility meter or sub-meter (Option C is not applicable)
- When energy savings values per individual measure are desired
- When interactive effects can be estimated using methods that do not involve long-term measurements
- When the independent variables that affect energy use are not complex and excessively difficult or expensive to monitor
- When operational data on the equipment is available through control systems
- When sub-meters already exist that record the energy use of subsystems under consideration (e.g., a separate sub-meter for heating ventilation and air-conditioning (HVAC) systems)

OPTION C – Whole Building Data Analysis

M&V Option C involves whole-facility utility or sub-meter data analysis procedures to verify the performance of retrofit projects in which whole-facility baseline and performance period data are available. Option C usually involves collecting historical whole-facility baseline energy use and related data and continuously measuring whole-facility energy use after UCRM installation.

Baseline and periodic inspections of the equipment are also needed. Energy savings under Option C are estimated by developing statistically representative models of whole-facility or sub-metered energy consumption (i.e., therms and/or kWh). This method confirms total energy savings, but does not measure the savings from individual components.

In general, Option C is used with complex equipment replacement and controls projects for which predicted savings are relatively large, i.e., greater than about 10% to 20% of the site's energy use, on a monthly basis. Option C regression methods are valuable for measuring interactions between energy systems or determining the impact of projects that cannot be measured directly, such as insulation or other building envelope measures.

Regression analysis requires experienced, qualified analysts, and Option C methods should be employed only for projects that meet the following requirements:

- Savings are predicted to be greater than about 10% to 20% of the overall consumption measured by the utility or sub-meter.
- At least 12 and preferably 24 months or more of pre-installation data are used to calculate a baseline model.
- At least 9 and preferably 12 months of performance period data are used to calculate annual savings.
- Adequate data on independent variables are available to generate an accurate baseline model, and procedures are in place to track the variables required for performance period models.
- Significant operational or other changes are not planned for the facility during the performance period, and procedures are in place to document changes that do occur at the site.

Performance Services uses regression analysis software to compile, analyze and compute the pre-retrofit baseline from the electricity, fuel and water bills. The post-retrofit utility consumption data from these meters will be obtained subsequently and compiled, analyzed, normalized for weather, occupancy and other variables and compared to the pre-retrofit baseline to determine the savings (savings = baseline – post-retrofit usage) for each annual performance period in the contract. A baseline utility bill analysis report for each of the energy meters (electric and natural gas) for each facility covered by this UAR report is included in the appendix of this report.

OPTION D – Calibrated Simulation

Option D involves whole facility or system analysis procedures to verify the performance of retrofit projects using calibrated computer simulation models. Computer simulation is a powerful tool that allows an experienced user to model the building and mechanical systems in order to predict building energy use both before and after the installation of UCRMs. The accuracy of the models is ensured by using metered site data to describe baseline and/or performance period

conditions. Carefully constructed models can provide savings estimates for the individual UCRMs on a project.

More elaborate models generally improve the accuracy of savings calculations, but increase costs. A calibrated simulation of a building, however, can be utilized to easily evaluate savings from other potential improvements.

Building simulation requires experienced, qualified analysts, and Option D methods should be used only for projects that meet any or all of the following requirements:

- For complex equipment replacement and controls projects with too many UCRMs to cost-effectively use retrofit isolation methods A or B
- When interactive effects between UCRMs are too complex for retrofit isolation approaches, but need to be quantified
- When the Option C utility data analysis approach is not viable due to the overall level of savings being less than 20% of metered use
- When complex baseline adjustments are expected during the performance period
- When energy savings values per individual measure are desired
- When new construction projects are involved
- When savings levels are sufficient to warrant the cost of simulation
- When either baseline or performance period energy data, but not both, are unavailable or unreliable.

Each method is appropriate for certain types of energy conservation projects, and has its associated benefits, risks and costs. The recommended site and UCRM specific M&V methodologies for verifying the project savings are presented below in section “Recommended M&V Options.”

Selecting an M&V Approach

Since the primary purpose of measurement and verification is to validate payments or performance guarantees, the cost of M&V should be less than the payment amount or guarantee that is at risk. Consequently, the objective of M&V should not necessarily be to derive a precise energy savings number, but rather to ensure that energy services companies (ESCOs) properly complete their projects and that the resulting energy savings are reasonably close to the claimed savings. The appropriate level of M&V rigor and accuracy is a level that protects the project investment and fulfills the intent of any legislative requirements. Careful consideration of the M&V level, type, and rigor benefits both parties and can help mitigate potential problems during the performance period.

In general, the selection of a project specific M&V method is based upon:

- Project costs and expected savings

- Complexity of the UCRM
- Number of interrelated UCRMs at a single facility
- Uncertainty or risk of savings being achieved
- Risk allocation between the parties
- Other uses for M&V data and systems

The scale of a project, energy rates, term of the contract, comprehensiveness of energy conservation measures (UCRMs), the benefit-sharing arrangement, and the magnitude of savings can all affect the value of the UCRM or project.

The M&V effort for this project has been scaled to the value of the project so that the value of the information provided by the M&V activity is appropriate to the value of the UCRM and the project itself.

Descriptions of power measurements and the methods used to log (trend) data

The use of power measurements to validate our engineering assumptions is paramount to the success of our performance contract projects. Performance Services invested substantially in high-quality multi-phase and true-RMS metering equipment as well as industrial grade, portable BTU measurement equipment.

Table at the end of the section contains a summary listing of the logging and metering equipment Performance Services uses in developing projects, in validating baseline equipment performance assumptions and post-installation verification of performance. Power, combustion, and BTU metering equipment are checked for calibration regularly by the manufacturer of the equipment. If any element(s) are beyond tolerances, the meter and the associated elements are re-calibrated.

RECOMMENDED M & V OPTIONS

Each method is appropriate for certain types of energy conservation projects, and has its associated benefits, risks and cost. Due to the interconnections of many of the UCRMs savings, PSI proposes to use primarily two M&V Options for this project: 1) Option A – Retrofit Isolation with Key Parameter measurement (instantaneous or short term) and 2) Option B – Retrofit Isolation with All Key Parameter measurements. These methods will verify with a high degree of confidence that the savings are being achieved without adding excessive cost to the project. These Options will be used to verify the savings for the proposed UCRMs. Details are as follows:

TABLE 5 – M&V METHOD PER UCRM

UCRM	UCRM Description	Percent of Project	Total Savings	M&V Method
1	LED Lighting	31.6%	$142,711	A
2	Power Conditioning	3.4%	$15,207	A
3	Solar PV	19.5%	$87,965	A
4	Demand Response	6.1%	$27,450	Deemed
5	Retro-Cx & BAS with Tridium Front End	10.4%	$47,056	B & Deemed
6	Water Controls	23.3%	$105,293	A
7	Window Film	0.2%	$752	Deemed
8	Window Restoration	5.6%	$25,296	Deemed
9	HVAC & Plumbing Upgrades	0.1%	$530	Deemed

THE BUILDINGS INCLUDED IN THIS PROJECT ARE:

1. Government Center
2. Court House
3. Juvenile Detention
4. Development Services
5. Health Department
6. Precinct 2
7. Precinct 3
8. Precinct 4
9. Jacobs Well Natural Center
10. Jail

Option A - Retrofit Isolation: Key Parameter Measurement

Performance Services has selected Option A for the following UCRMs:

UCRM 1 – LED Lighting

Performance Services proposes to retrofit to replace incandescent and fluorescent lightings with LED lighting that would:

- Reduce the energy consumption of the existing lighting system by implementing innovative, improved lighting technologies and by applying creative design and problem solving measures to existing inefficient lighting situations
- Reduce existing lighting maintenance requirements
- Maintain existing light levels or attain light levels established by the Illuminating Engineering Society (IES) based upon best energy savings
- Improve the levels and quality of lighting experienced by Hays County

The key measurement parameters will be the instantaneous power in watts used by each pre and post-retrofit lighting fixture lamp and hours of operation during occupied and unoccupied periods. The measurements will be performed on a statistically significant quantity (sample) of pre and post-retrofit fixtures. Lighting power measurements will be made with a true-RMS watt meter to identify the instantaneous power draw of fixtures or circuits. Fixtures will typically be measured at either the last point of control (switch or circuit breaker), or at the fixture itself, whichever is safest to employ to achieve the readings. When lighting power is measured at the switch or circuit breaker, the number operating and non-operating fixtures is counted in order to accurately describe the average power draw for a particular fixture type. If a mixture of fixture types is on the last point of control or on a power circuit, then the individual fixtures should be measured. Finally, it may not be feasible or cost effective to measure individual fixtures prior to contract execution (e.g., pre- measurements). These are typically for high ceiling-mounted fixtures, and, consequently, these fixtures may be measured during construction for both the pre- and post-installation condition as follows: baseline condition is measured, fixture is retrofitted, and fixture is measured for post-installation condition.

The number of fixtures and usage groups to be selected for measurement is based on the use of statistical sampling method (described below) to ensure reasonable sample populations and confidence level (CL) in the results of the samples.

- Performance Services uses lighting audit to identify the fixtures to measure pre and post implementation and the hours of operation groups.
- For measuring power, Performance Services identified the top 70% or greater of the total connected electric load (kW) based on the lighting audit. Each fixture connected load is calculated by (fixture quantity) X (watts per fixture). Total connected load (Watts) is the sum of all (fixture quantity) X (watts per fixture). The remaining percent of total

connected load have a lesser effect on the savings results and these fixtures will not be measured.

- Performance Services will use Coefficient of Variation (CV) of 0.5 for pre and post-retrofit
- Performance Services will use Confidence Level (CL) to be 90%
- Performance Services will use Precision to be 20%.
- Based on the fixture quantity an expected sample size will be selected. Minimum sample size per fixture type will be 3 pre-retrofit samples and 3 samples post-retrofit. Additional samples might be required to meet the expected statistical parameters described above.

SAVINGS FORMULAE

$$ES = \frac{(W_{BASE} \times HRS_{BASE}) - (W_{POST} \times HRS_{POST})}{1000}$$

Where:

ES	=	Total energy savings (kWh)
W_{BASE}	=	Measured baseline watt per fixture (W)
W_{POST}	=	Measured post-implementation watt per fixture (W)
HRS_{BASE}	=	Measured baseline operating hours (Hours)
HRS_{POST}	=	Measured post-implementation operating hours (Hours)

Energy savings was calculated using manufacture data and spreadsheet calculations. Savings include fixture maintenance savings which are consistent with actual cost according to Hays County. The lighting maintenance savings was determined by the reduction of material cost during the warranty period and is based on information collected during interviews with Hays County staff and accepted industry standards. The savings is agree-to for the life of the project, and will not be verified under the annual energy savings report.

BASELINE OPERATIONAL HOURS

Baseline lighting hours of operation are defined by ANSI by building type. This project consists of both office buildings and detention facilities. In order to better define operational hours, specifically where occupancy sensors are being used, lighting loggers were installed and hours of operation recorded. This information has been used to better define baseline hours of operation for lighting within the project buildings. Also, the power draw of common fixture types where measured to better establish the lighting baseline. The results (baselines) follow:

Building Type	ANSI Lighting Hours/Yr	Area Lighting Hours/Yr (Occ. Cntl)
Office Building	3737	1869
Detention Facility	6630	3315

Baseline Existing Fixture Wattages

Fixture Type	Wattage
4' 2 Lamp T8	59
4' 3 Lamp T8	88
4' 4 Lamp T8	115

UCRM 2 – Power Conditioning

The installation of power conditioners with modular capacitance to improve power factor will make motors run cooler and more efficiently. Thus results in a reduction in energy consumption and an extension of the useful life of motor loads. Also power conditioning system will provide harmonic filtration to mitigate harmonic distortion and recycle waste energy resulting in reduced energy consumption which prolongs the longevity of electrical equipment.

PSI will perform Pre & Post electrical measurements including harmonics using calibrated Hi-Power metering equipment.

Savings were calculated using on-line harmonic reduction spreadsheet calculators. The savings calculation was also performed by the manufacturer's representative. Savings will be evaluated based on the following changes being made to the existing electrical systems:

1. Building Power Factor between 95% and 100%
2. Building total harmonics distortion of 1.8% or less

Performance Services will use a power quality meter to verify power factor and total harmonic distortion levels annually at the Government Center, Jail and Juvenile Detention.

UCRM 3 Solar PV

Performance Services proposes to install solar photovoltaics at both the Government Center and jail. Solar photovoltaics is a renewable energy source that will directly supply electricity to both the Government Center and jail buildings. Electricity supplied by the solar photovoltaic array will be submetered as part of the project.
Because Performance Services cannot guarantee weather conditions, Performance Services will measure the efficiency of the solar photovoltaic arrays under defined circumstances. This measured efficiency will be used within the power production simulation model to verify energy production meets or exceeds the guaranteed amount. Savings/energy production was calculated using a Helioscope or PV Watts computer simulation model.

UCRM 6 – Water Controls

Performance Services proposes retrofit detention plumbing fixtures with usage and flow controls and to replace high flow urinals with low flow urinals as well as replace high flow aerators with low flow aerators. Benefits include:

- Reduce the water consumption of the plumbing system by implementing innovative, improved plumbing technologies
- Reduce hot water usage
- Reduce existing plumbing maintenance requirements

The key measurement parameters will be the water used by each pre and post-retrofit water fixture. The measurements will be performed on a statistically significant quantity (sample) of pre and post-retrofit fixtures. Water use and flow measurements will be made with approved equipment. Fixtures will be measured individually. Finally, it may not be feasible or cost effective to measure individual fixtures prior to contract execution (e.g., pre- measurements). Typically, measurements of pre- and post-installation condition will be as follows: baseline condition is measured, fixture is retrofitted, and fixture is measured for post-installation condition.

The number of fixtures and usage groups to be selected for measurement is based on the use of statistical sampling method (described below) to ensure reasonable sample populations and confidence level (CL) in the results of the samples.

- Performance Services used a water audit to identify the fixtures to measure pre and post implementation and the usage.
- For measuring water usage, Performance Services identified the top 70% of the total domestic water load based on the water audit. Savings will be measured using a sampling of these fixtures. The remaining percent of total connected load have a lesser effect on the savings results and these fixtures will not be measured.
    - Performance Services will use Coefficient of Variation (CV) of 0.5 for pre and post-retrofit
    - Performance Services will use Confidence Level (CL) to be 90%
    - Performance Services will use Precision to be 20%.
    - Based on the fixture quantity an expected sample size will be selected. Minimum sample size per fixture type will be 3 pre-retrofit samples and 3 samples post-retrofit. Additional samples might be required to meet the expected statistical parameters described above.

SAVINGS FORMULAE

$$WS = \frac{(W_{BASE} \times USG_{BASE}) - (W_{POST} \times USG_{POST})}{1000}$$

Where:

WS	=	Total water savings (kgal)
W_{BASE}	=	Measured baseline gallons per fixture (gal)
W_{POST}	=	Measured post-implementation gallons per fixture (gal)
USG_{BASE}	=	Calculated annual baseline usage (Quantity)
USG_{POST}	=	Calculated post-implementation usage (Quantity)

Savings baselines values are based on the following:

Water Usage Baselines	Gov. Center	Jail
Typical Bldg Occupancy Including Visitors	390	426
Male/Female Ratio	45/55	NA
# of Toilet Flushes Per Year	258,375	3,000,957
Average gallons/flush	1.60	3.50
# of Urinal Flushes Per Year	131,625	NA
Average gallons/flush	1.00	NA
Minutes of Shower Usage Per Year		951,920
Average gallons/minute		2.50
# of Times Lavatory Uses Per Year	312,000	328,500
Average minutes/wash	0.41	0.41
Average gallons/minute	1.90	2.20

Gov. Center-Quantity of flushes per year based on the following:

- Employee women using toliets four times per day
- Employee men using toliets one time per day and urinal three times per day
- Visitors using toliet or urinal every two hours

Jail-Lavatory use for non detention areas only

- Savings calculated using a 9% reduction in toilet flushes due to water control system

Water savings was calculated using manufacture data and spreadsheet calculations. Savings include a reduction in hot water usage (water heater savings) which are consistent with actual cost according to the County. Hot water energy savings were determined by using 80 percent of industry standard calculations. The savings is agree-to for the life of the project, and will not be verified under the annual energy savings report.

OPTION B - Retrofit Isolation with All Parameter Measurement

Performance Services has selected IPMVP Option B for the following UCRMs and associated maintenance savings:

UCRM 5 – Retro-Cx and Building Automation System with Tridium Front End

As part of this measure, Performance Services will optimization building controls and retro-commission these controls which will result in energy savings at the Government Center. Energy savings will be realized through temperature set-points adjustments, reduced quantities of outdoor air during unoccupied periods and optimized equipment operation according to occupancy and load conditions.

Performance Services will utilize the BAS to trend available data, such as equipment run times, temperature set points, air flow (CFM), damper position, carbon dioxide (CO_2) level, etc. Savings are calculated using spreadsheet based engineering calculations. Savings result from:

- Reduced run hours - Optimal scheduling of HVAC equipment
- Temperature setbacks
- Optimizing outdoor air usage as appropriate
- Utilizing natural gas heat instead of electric reheat when appropriate
- Minimize simultaneous heating and cooling

Baseline HVAC equipment power draw that will be used in the savings calculations will be measured using a true-RMS watt meter prior to project implementation. Baseline HVAC hours follow:

- RTU-11 & 12 – 24 hours per day, 7 days per week
- RTU-11 & 12 Fans - 24 hours per day, 7 days per week
- RTU-11 & 12 Outdoor air dampers – 10% open during unoccupied periods
- RTU-11 & 12 Natural Gas Heating - Disabled

Guaranteed electrical energy savings generated by the fan and compressor motor operational hour changes shall be based on motor horsepower, baseline hours identified in this Guarantee and trended run hours. These saving shall be considered variable savings such that the actual savings will vary monthly based on actual motor runtime as measured by the energy management system. The following calculations shall be used in determining the amount of actual electric savings.

$$Savings_{kWh} = \frac{Motor_{HP} \times (.746kW / HP) \times (Baseline\ Hours - Trended\ Hours)}{Motor\ Efficiency}$$

$$Savings_{\$} = Savings_{kWh} \times Rate_{\$/kWh}$$

Where:

$Motor_{HP}$ = Motor horsepower identified on motor nameplate
$Savings_{kWh}$ = Actual annual electric consumption savings in kWh
$Savings_{\$}$ = Actual annual electric savings in dollars
$Rate_{\$/kWh}$ = Electrical consumption rate in dollars per kWh
Baseline Hours = Runtime hours

Other Savings

Guaranteed savings, other than motor savings shall be spreadsheet calculations based on equipment efficiencies and runtimes.

Building Controls

Performance Services will replace existing thermostats with BACnet protocol, smart energy management space control devices. The devices will be visible and controllable through a new Tridium user interface. Energy savings will be realized through temperature set-points adjustments and optimized equipment operation according to occupancy and load conditions.

Performance Services will utilize the new BAS to trend available data, such as equipment run times and temperature set points. Savings are calculated using spreadsheet based engineering calculations. Savings result from:

- Reduced run hours - Optimal scheduling of HVAC equipment
- Temperature setbacks
- Minimize simultaneous heating and cooling

Baseline HVAC equipment power draw that will be used in the savings calculations will be measured using a true-RMS watt meter prior to project implementation. Baseline HVAC hours follow:

- Court House Split and Package Systems – 24 hours per day, 7 days per week
- Health Department Split Systems – 24 hours per day, 7 days per week
- Precinct 4 Split Systems - 24 hours per day, 7 days per week
- Jail Rooftop Units – 24 hours per day, 7 days per week

Guaranteed electrical energy savings generated by the fan and compressor motor operational hour changes shall be based on motor horsepower, baseline hours identified in this Guarantee and trended run hours. These saving shall be considered variable savings such that the actual savings will vary monthly based on actual motor runtime as measured by the energy management system. The following calculations shall be used in determining the amount of actual electric savings.

$$Savings_{kWh} = \frac{Motor_{HP} \times (.746kW / HP) \times (Baseline\ Hours - Trended\ Hours)}{Motor\ Efficiency}$$

$$Savings_{\$} = Savings_{kWh} \times Rate_{\$/kWh}$$

Where:

$Motor_{HP}$ =	Motor horsepower identified on motor nameplate
$Savings_{kWh}$ =	Actual annual electric consumption savings in kWh
$Savings_{\$}$ =	Actual annual electric savings in dollars
$Rate_{\$/kWh}$ =	Electrical consumption rate in dollars per kWh
Baseline Hours =	Runtime hours

Other Savings

Guaranteed savings, other than motor savings shall be spreadsheet calculations based on equipment efficiencies and runtimes.

OPTION C - Whole Building Data Analysis

Performance Services has selected IPMVP Option C for the following UCRMs:

- None

In general, Option C is used with complex equipment replacement and controls projects for which predicted savings are relatively large, i.e., greater than about 10% to 20% of the site's energy use on a monthly basis. Option C regression methods are valuable for measuring interactions between energy systems or determining the impact of projects that cannot be measured directly, such as insulation or other building envelope measures.

Performance Services uses engineering calculations to compute the pre-retrofit baseline from the electricity and fuel bills. The post-retrofit utility consumption data from these meters will be obtained and subsequently compiled, analyzed, normalized for weather, occupancy and other variables and compared to the pre-retrofit baseline to determine the savings for each annual performance period in the contract.

SAVINGS FORMULAE

The savings are defined by the formula:

$$Savings = Baseline\ Energy - Option\ A\&B\ UCRM\ Savings + Remote\ Central\ Plant\ Savings - Post\ Installation\ Energy_{Normalized} \pm Adjustments$$

Where

Baseline Energy	=	Energy consumption calculated from utility bill analysis prior to retrofit and adjusted for other measures at this building for which savings are being measured using Option A and/or B
Option A&B UCRM Savings	=	*Energy and maintenance savings from Option A and Option B measured UCRMs within building*
Remote Central Plant Savings	=	*Calculated central plant energy savings based on field measured efficiency or if not available, 0.85 kW/ton. Baseline operation: 24*

		hours per day, seven days per week. Post hours of operation based on measured primary AHU run times.
Post Installation Energy$_{Normalized}$	=	*Performance period energy use (customer provided post-retrofit electricity, natural gas and fuel oil billing data) that will be adjusted to the baseline load conditions to determine the savings*
Adjustments	=	*Routine and non-routine changes made to the baseline or performance period energy use to account for variations in conditions*

Other Savings

Performance Services has provided documentation for the following Other Savings within the Appendix of the UAR. Due to these savings being small and/or not readily documentable, Performance Services believes that it is not cost effective to measure and verify these savings. Other Savings included in this project are as follows:

UCRM 4 Demand Response

Performance Services proposes to install standby generator controls that will allow Hays County to participate in the ERS demand response program through a qualified scheduling entity. This measure includes making the following standby generators available for load shedding when requested by ERCOT.

Building	Generators	kW Rating	kW Reduction Available	Projected ERS Revenue per Year*
GC	1 Stewart Stevenson	750	338	$15,188
JD	1 Generac	125	88	$3,938
Jail	1 Catepilar	600	150	$6,750
DS	1 Catepilar	100	35	$1,575
Totals		**1,475**	**575**	**$27,450**

* Estimated annual revenue for ERS program at $45,000 per year per megawatt capacity.

As part of this project, Performance Services will assist Hays County sign up for the ERS demand response program. Projected UCRM revenue has been calculated based on recent program information supplied qualified scheduling entities. While this measure will generate significant revenue and have a good payback, it is not a measure than Performance Services can guarantee as it is dependent on Texas Facilities ongoing participation.

Server Room Cooling Improvements

Performance Services proposes to provide better control of the existing CRAC units serving the Government Center server room as well as change the air diffusers and current server racks with racks design to provide laminar air-flow through the server's. Making these changes will reduce hot spots, improve server performance and safety for the county's valuable server capacity. Energy savings will result from the more efficient/targeted use of air conditioning in the server room. This measures energy savings ($126 per year) accounts for less than 1% of the overall project energy savings.

UCRM 7 Window Film

Following restoration of the windows at the Court House, Performance Services proposes to install window film on all but 16 windows not compatible with window film. Window film will reduce the solar load on the Court House, improve the thermal properties of the windows and improve occupant comfort. Energy savings will result from the improved window shading coefficient and improved window thermal properties which will reduce the amount of air conditioning required to maintain space temperatures. This measures energy savings ($752 per year) accounts for less than 1% of the overall project energy savings.

UCRM 8 Window Restoration

Performance Services proposes to restore the wooden windows at Court House. Window restoration will improve safety, reduce air infiltration and improve occupant comfort. Energy savings will result from reduced air infiltration which will reduce the amount of air conditioning required to maintain space temperatures. This measures energy savings ($307 per year) accounts for less than 1% of the overall project energy savings.

UCRM 9 HVAC Upgrades

Performance Services proposes to replace the two heat pumps serving the Court House in addition to split systems AC-1 and AC-2. The new systems will be efficient than the existing systems. This measures energy savings ($530 per year) accounts for less than 1% of the overall project energy savings.

Lighting Material Savings

The HC will realize lighting material savings during the 10 warranty on linear LED retrofits and new fixtures. This savings has been calculated based on current Hays County maintenance practices and material costs. This savings analysis is included in the Appendix of the UAR. To help assure that HC achieves projected warranty period savings, PSI will train HC staff on the warranty process. The following annual lighting material savings have been reviewed and approved by Hays County: $39,687.

Domestic Water Heating Savings

Retrofitting faucets with low flow aerators will reduce the demand and usage of domestic hot water. These savings are relatively small and as such, it is not cost effect to measure and verify the savings associated with this UCRM. This measures energy savings ($5,112 per year) accounts for less than 2% of the overall project energy savings.

ENERGY, WATER AND O&M RATE DATA

For the purpose of calculation the energy dollar savings Performance Services in collaboration with Hays County, have agreed to the data below as the baseline year utility rates. Performance Services and Hays County agree for the term of this Agreement that the annual Utility Rate escalation factor will be 2% for electricity, natural gas, sewer and water. This escalation rate is based on the historical average rise in electric rates.

TABLE 7 – UTILITY RATES

Electric Rate for Government Center & Jail

Season	Cost per kW	Cost per kWh
Year Around	$3.44	$0.07726

Electric Rate for Juvenile Detention

Season	Cost per kW	Cost per kWh
Year Around	$4.50	$0.07650

Electric Rate for Court House & Health Department

Season	Cost per kW	Cost per kWh
Year Around	$3.61	$0.07726

Electric Rate for Precinct 2

Season	Cost per kW	Cost per kWh
Year Around	$3.38	$0.06893

Electric Rate for Dev. Services, Precinct 4 & Jacobs Well

Season	Cost per kW	Cost per kWh
Year Around	$0.00	$0.08109

Building	Cost/CCF of NG
Government Center	$0.65
Court House	$0.65
Juvenile Detention	$0.65
Development Services	NA
Health Department	NA
Precinct 2	NA
Precinct 4	NA
Jacobs Well Natural Center	NA
Jail	$0.65

Building		Cost per Unit	
Name	Gross sq. ft.	Sewer (kgal)	Water (kgal)
Government Center	236,000	$6.93	$7.35
Jail	83,306	$6.93	$7.35

This appendix introduces the statistical background, theory and formulas used to select, analyze and validate samples for project monitoring and evaluation. It also provides guidelines and procedures for the design and implementation of sampling.

The purpose of monitoring a sample, as an alternative to monitoring an entire population is to; (a) characterize particular attributes of a population from which a sample is drawn with adequate accuracy and reliability, while (b) reducing monitoring costs and effort.

As shown in figure below, sampling involves selecting several members from a population for monitoring and evaluation. The measured characteristics or behavior of the sample group is then used to infer the characteristics and/or behavior of the entire population. As expected, the assumption is that the sample is representative of the population. To ensure that the sample is indeed representative, calculations must be performed to assess and quantify the statistical validity of the sampled data. These calculations are presented later in this Appendix.

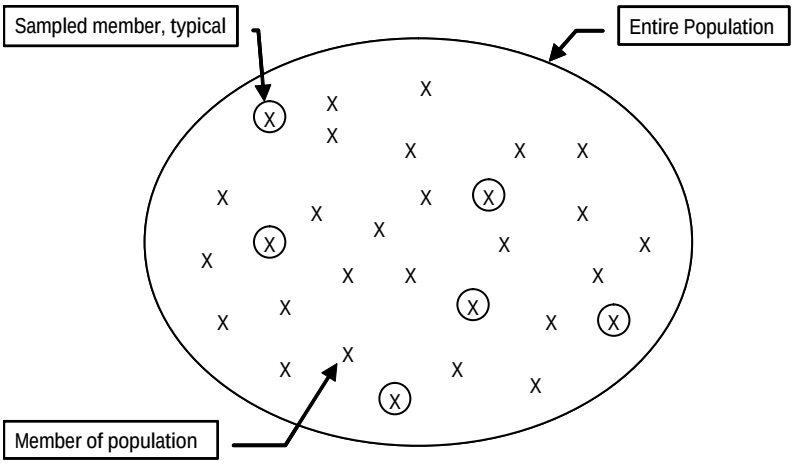

Figure 1 – Population and Sample

Sampling is applicable to projects such as lighting retrofits, energy efficient motor replacements, HVAC unit replacement, water retrofits, or any other project in which a number of similar pieces of equipment are affected by the same type of UCRM.

In the most common applications, sampling strategies are used to characterize the hours of operation and the instantaneous power draw of a constant-load device. A separate sample set is required for each item evaluated.

When selecting a sample from a population to determine hours of operation, it is necessary to ensure that the load is or device being sampled is monitored at or down-stream of its last point of control (LPC).

The last point of control (LPC) is the portion of an electrical circuit (or other source of energy), that serves a set of equipment that is controlled on a single switch. As a result, all of the fixtures or pieces of equipment on that LPC are typically operated the same number of hours per year.

For metering purposes, it is assumed that measurements taken of a single piece of equipment on an LPC captures the operating hours for all of the equipment served on the same circuit.

Mathematical Methods for Sampling

Sampling must be conducted using accepted methods and use an appropriate level of care to ensure that the M&V results that rely on the sampling and analysis are sufficiently accurate. This section provides a summary of the concepts, methods and equations to be used.

Although various assumptions regarding the distribution of the sampled data can be made, the large majority of sampling statistical analysis assumes that the data is normally distributed about the mean and in this Appendix, this assumption is made.

Statistical validity requires that the samples be randomly selected. Use of a random number generator, such as that found in MS Excel™ is convenient for ensuring the sample is randomly selected.

Point Estimation – Confidence and Precision

When we use sampling to estimate an average value of an entire population, we are performing an activity know as point estimation. A value or 'point' that is estimated based on a sample is not the actual average value but rather, is a value that is "reasonably close" to the actual average value. The question, then, for the M&V practitioner is: "What do we mean when we say 'reasonably close'?" The question is answered using the following statistical terms.

- Confidence: Confidence is fundamentally the same as probability, except that confidence refers to data already obtained, while probability refers to a future value. A confidence of 90% is commonly used in M&V. So, using our 90% example, when we refer to a confidence level, we are saying "I am 90% confident that the measured value is within my stated confidence interval."
- Confidence Interval (or Precision): Because the value estimated by sampling cannot be expected to be the actual value, it is useful to state an interval in which we have confidence the true value lies. Confidence interval is also often referred to as precision. An M&V practitioner may state that they know the value has a precision of 20%, which would mean that the "The estimate is within 20% of the true value."

Confidence and precision, then, are the values referred to when a 90/20 (or 80/20 or any other) criteria is specified.

EXAMPLE

Imagine that we wish to measure the run-hours of a sample of equipment for a month. Imagine now that we measure 200 'on' hours. If we are hoping to meet a 90/20 criteria, we are hoping that we can say, with a 90% probability, that our estimate is within 20% of the actual average run hours – that is, we are 9/10th sure the actual runtime is between 180 and 220 hours.

To graphically illustrate the concepts of normal distribution, confidence, and precision, shows a normal distribution with a confidence interval. Note that the confidence interval in the figure is defined by the error (+/- E). This error figure is discussed further below and is defined in Equation 1.

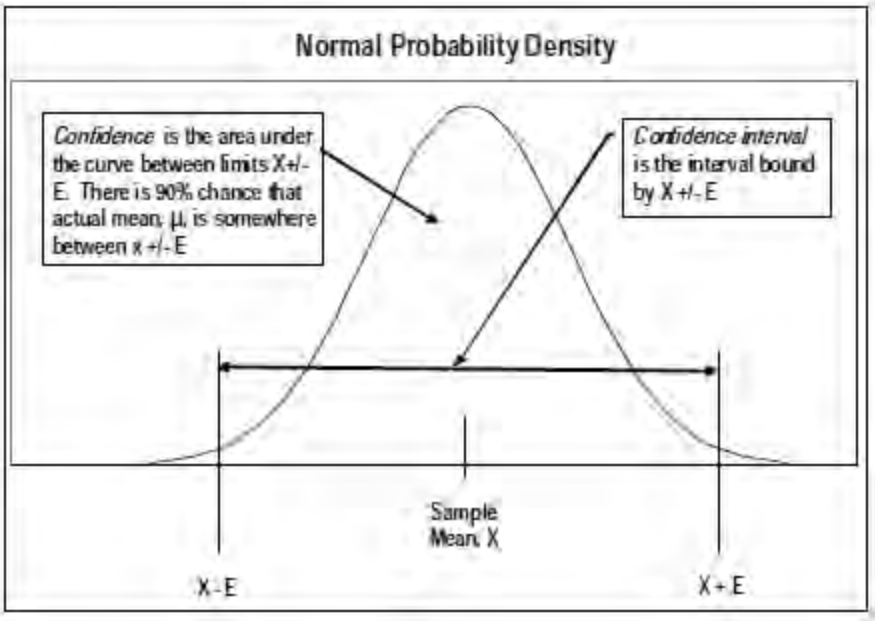

Figure 2 – Normal distribution with confidence interval

The confidence interval (or precision) and the confidence level are positively linked; for any sample, as the confidence interval increases (that is, the precision is reduced, and the range of possible values of the true mean increases) the confidence level increases. Or, looking at it another way, as the confidence interval is reduced, the confidence level is also reduced.

Application of Sampling to Projects

In the next sections considerations for the design and application of sampling are explored. The analysis steps to be used in conducting sampling are as follows:

These steps are discussed below.

Compile Project/UCRM and M&V Plan Information

In this step, the goal is to fully understand several things, including: the measure scope, the savings calculations quantifying the intended performance, the M&V method to be used and the data to be collected. Once the project is understood, an M&V practitioner can identify the calculation method and select variables to be sampled.

In many energy conservation projects, it is often necessary to conduct both pre and post installation sampling. Regardless of whether the sampling is for evaluating the baseline or the post-retrofit conditions, the following information is typically required to properly assign usage groups and determine sample sizes.

- ***Number of circuits, devices or LPCs.*** Identify and document the LPCs that are affected by the installation of UCRMs. This should be provided in the form of an equipment inventory survey in which each line in the survey represents an LPC that includes descriptions of affected and proposed UCRM nameplate data and quantity as well as location information.
- ***Actual or change in load or wattage.*** Using the equipment inventory survey, the total change in load or wattage of the affected equipment by usage group can be computed.
- ***Hours of operation*****.** Sampling can be used to estimate the average hours of operation of the equipment. After the first sampling period (whether it is a year, month or week) of monitoring, the sampling result (actual C_v, Equation 3) should be used to compute the sample size. If it is expected that the equipment will be used in a significantly different in the current period than it was in the previous period, the estimate may be adjusted. Lighting hours of operation have already been established and defined herein.

Designate Sampling Groups

Each device or LPC should be assigned to a usage group based on similarities in the parameter being determined, such as operating hours or connected load. If differences are expected, but there are too few usage groups, the resulting variance of the data may result in unsatisfactory confidence and precision levels. However, if too many usage groups are created, then excessive monitoring and too small of populations may occur. So, while considering the tradeoffs, usage groups should be developed from criteria such as:

- Area type (for example; office, hallway, meeting room)
- Annual operating hours

- Timing / usage patterns of the operating hours, load, or other variable
- Variability of operating hours, load, or other variable
- Similar functional use

Usage groups should be selected so that equipment or LPC's are similar in that the sampled value (for example, hours or kW or kW/unit) is clustered around a specific estimate. When possible, avoid designating usage groups with populations that will yield less than 10 sample points.

Examples of standard usage groups for fan motors with similar operating hours are HVAC ventilation supply fans, return fans, and exhaust fans.

Examples of standard usage groups to determine lighting operating hours are fixtures with similar operating characteristics in offices, laboratories, hallways, stairwells, common areas, perimeters, storage areas, etc.

Usage groups may be defined for the population on a building-by-building basis or across a number of buildings with similar usage areas. Monitoring can be done for a single or multiple buildings provided the usage groups are similar. Defining populations for multiple buildings is acceptable and usually results in fewer monitoring points than if each building were considered separately.

SELECT SAMPLES

Select desired confidence and precision levels. A 90/20 confidence/precision level is commonly used in M&V and is suggested.

Establishing the Coefficient of Variation. Prior to selecting a sample, an estimate of the sampled coefficient of variation (C_v) must be made. A C_v of 0.5 has been historically recommended, and numerous projects have shown this to be reasonable guess for most applications. After the first year of monitoring, the coefficient of variation for each usage group can be projected from the results of the metering in the previous year.

Having selected a confidence and precision level (90/20) and a C_v (perhaps 0.5), use Equation 6 and 7, above, to calculate a sample size for each sampling group. Then, randomly select that number of samples from the population.

It is strongly recommended that oversampling (at a 10% or greater level) be included in case of data collection device failure or unexpectedly high data scatter.

Table 3 illustrates the effect of confidence interval and precision on sample size.

TABLE 8 – FIRST-YEAR (C_V=0.5) SAMPLE SIZE TABLE BASED ON USAGE GROUP SAMPLING[1]

Precision	20%	**20%**	10%
Confidence	80%	**90%**	90%
Z-Statistic	1.282	**1.645**	1.645
Population Size, N	Sample Size, n*		
4	3	4	4
8	5	6	8
12	6	8	11
16	7	9	13
20	8	10	16
25	8	11	19
30	9	11	21
35	9	12	24
40	9	12	26
45	9	13	28
50	10	13	29
60	10	14	32
70	10	14	35
90	10	15	39
100	10	15	41
125	11	15	45
200	11	16	51
300	11	17	56
400	11	17	59
500	11	17	60
Infinite	11	17	68

The samples in each usage group should be drawn at random[2], so that each member has an equal probability of being selected.

If there is reason to believe that there are significant seasonal variations in the operation of the equipment, sufficient monitoring will need to be conducted to capture these variations.

[1] Table does not reflect oversampling. However, because data collection problems are very, very common and because of the departure from normal distribution for small samples (less than 30), over-sampling is critical.

[2] Random selection of monitoring points is critical to avoid bias in the sample. Spreadsheet or other computer software should be used to generate a list of random numbers that may be used to place loggers on a given LPC.

TABLE 9 – REPRESENTATIVE MONITORING EQUIPMENT USED FOR MEASUREMENT & VERIFICATION

	Manufacturer	Model	Measurement	Range	Accuracy
Lighting & Occupancy Time of Use	Hobo	Datalogger	-	-	-
Temperature & Relative Humidity	Hobo	U10-003	Temperature	-4°Fto 158°F	± 0.72°F
			Relative Humidity	25% to 95%	± 3.5%
Temperature & Relative Humidity + 2 external inputs	Hobo	U12-013	Temperature	-4°F to 158°F	± 0.72°F
			Relative Humidity	25% to 95%	± 3.5%
4 external inputs	Hobo	U12-006	-	-	-
Carbon Dioxide external input	Telaire	7001	Carbon Dioxide	0-4000 ppm	± 50 ppm
Current Transformer external input	Hobo	CTV-A	Amperage	0-20 A	± 4.5%
Current Transformer external input	Hobo	CTV-C	Amperage	0-100 A	± 4.5%
Boiler Horsepower / BTU's / Chiller kW per Ton	GE Panametrics	PT878	Flow	-17950 to 179500 gpm	± 1.5%
			Temperature	-4°F to 500°F	± 0.83°F
Multi-Phase Power	Hioki	3169-20	Voltage	0-600 V	± 0.2%
			Amperage	0-500 A	± 0.5%
Multi-Phase Power	Hioki	3169-20	Voltage	0-600 V	
			Amperage	0-500 A	
True-RMS Power	FLUKE	345 or 1735	Voltage	0-600 V	± 0.3%
			Amperage	0-1400 A	± 0.3%
Combustion	Bacharach	PCA-265	Oxygen	0.1% to 20.9%	± 0.3%
			Temperature	-4°F to 2192°F	± 6°F
			Carbon Monoxide	0-4000 ppm	±5%
			Nitric Oxides	1-3000 ppm	±5%
			Pressure	± 72 inches WC	± 2%

EXHIBIT D
PERFORMANCE GUARANTEE AGREEMENT

Project: Hays County
Energy Savings Performance Contracting
Hays County Texas

Qualified Provider:

Company Name: Performance Services of Texas, Inc.

Address: 3010 LBJ Freeway, 1215-A

City, State, Zip: Dallas, TX 75234

Representative: Timothy P. Thoman

Performance Guarantee Information:

Annual Guaranteed Operational Savings Amount =	$	92,127
Annual Guaranteed Energy/Water/Sewer Savings Amount =	$	360,133
Total Annual Guaranteed Amount =	$	452,260

Program Term = 16 Years

Guarantee
Performance Services, Inc. (the "Provider") guarantees that Hays County (the "Owner") will annually save the amounts stated above in energy and operating costs during the stated program term.

The Performance Guarantee Agreement (the Guarantee) shall commence once the Utility Cost Reduction Measures (UCRMs) are installed, the Owner's staff has been trained how to operate the UCRMs and the UCRMs have been optimized by the Provider. The Guarantee commencement date shall be established by both the Owner and Provider by their signatures on the Guarantee Commencement Letter contained herein. The Guarantee shall be fulfilled and fully satisfied once the Guaranteed Energy and Operational Savings have equaled the Owner's payments as identified on the Amortization Schedule in the Guaranteed Energy Savings Contract (the Agreement).

Energy Savings
Energy savings shall be measured and verified by various methods depending on the UCRM. The measurement and verification methods to be used in determining actual energy savings are identified for each UCRM within this Guarantee and the Measurement and Verification Plan included in the Utility Assessment Report (UAR) dated December 15, 2016.

The utility information used in this Guarantee for the Base Year shall be for the one-year period from January 2015 through December 2015. Current Year utility rate data shall be used in calculating energy savings occurring during that current year; provided Current Year utility rates are not less than Base Year utility rates. If Current Year utility rates drop below Base Year rates, Base Year rates shall be used to

DRAFT

calculate Current Year energy savings. Any energy savings generated during the installation phase of this project shall be added to savings achieved during the first annual period of the Guarantee.

The Owner shall pay the Provider the annual Energy Monitoring fees identified within this Guarantee. For these fees, the Provider shall calculate and report the actual energy savings over the term of the Guarantee as described herein.

At the end of every annual guaranteed period, the actual annual savings will be compared to the guaranteed annual savings to determine if the guaranteed savings were achieved. If the actual savings for this one year period are less than the guaranteed annual savings amount, the Provider shall pay the Owner a cash refund for the difference between these amounts (herein call the "shortfall"). The maximum shortfall in any one-year period is limited to the annual guaranteed energy savings amount identified on the first page of this guarantee.

UCRM 1 - LED Lighting Savings

Guaranteed electrical energy savings generated by the lighting UCRMs included in the Project shall be based on a one-time measurement of lighting energy consumption under existing conditions and a one-time measurement upon completion of the lighting retrofit. The number of fixtures and usage groups selected for measurement is determined by the methods indicated in the UAR. These sample measurements shall be used to determine actual lighting savings. Each sample circuit shall be measured before and after the retrofit. The following calculations determine the actual annual electrical savings for the entire period of the guarantee.

Consumption Savings:

$$Savings_{kWh} = \sum[(FIXT) \times (Powerdraw_B - Powerdraw_A) \times (Baseline\ Hours)]$$

$$Savings_{\$} = Savings_{kWh} \times TrailRate_{Consumption}$$

Where:

FIXT =	Number of fixtures for each retrofit
$Powerdraw_B$ =	Power draw in kW for each fixture type before implementing lighting ECM per UAR
$Powerdraw_A$ =	Power draw in kW for each fixture type after implementing lighting ECM.
$Savings_{kWh}$ =	Actual annual electric consumption savings in kWh
$Savings_{\$}$ =	Actual annual electric savings in dollars
$TrailRate_{Consumption}$ =	Electrical consumption rate (trailing rate) in dollars per kWh
Baseline Hours =	Baseline Hours are provided for each retrofit type in the UAR.

DRAFT

Performance Services

Demand Savings:

$Savings_{kW} = \Sigma[(FIXT) \times (Powerdraw_{B} - Powerdraw_{A})]$

$Savings_{\$} = Savings_{kW} \times TrailRate_{Demand}$

Where:

FIXT =	Number of fixtures for each retrofit
$Powerdraw_B$ =	Power draw in kW for each fixture type before implementing lighting ECM.
$Powerdraw_A$ =	Power draw in kW for each fixture type after implementing lighting ECM.
$Savings_{kW}$ =	Actual annual electric demand savings in kW
$Savings_{\$}$ =	Actual annual electric savings in dollars
$TrailRate_{Demand}$ =	Electrical demand rate (trailing rate) in dollars per kW

UCRM 2 – Power Conditioning
Guaranteed electrical energy savings generated by power conditioners shall be based upon one-time Pre- and annual Post- Electrical measurements shall be as described in the UAR.

UCRM 3 – Solar Photovoltaic
Guaranteed energy savings for this UCRM shall be based upon the methods described in the UAR.

UCRM 4 – Demand Response
Guaranteed energy savings for this UCRM are considered "Deemed" and they shall be applied to the guaranteed annual energy savings amount throughout the term of the Guarantee.

UCRM 4 – Retro-Commissioning & Building Automation System with Tridium Front End
Guaranteed electrical energy savings generated by the fan and pump motor UCRMs shall be based on motor horsepower, baseline hours identified in this Guarantee and trended run hours. These saving shall be considered variable savings such that the actual savings will vary monthly based on actual motor runtime as measured by the energy management system. The following calculations shall be used in determining the amount of actual electric savings.

$$Savings_{kWh} = \frac{Motor_{HP} \times (.746kW / HP) \times (Baseline\ Hours - Trended\ Hours)}{Motor\ Efficiency}$$

$Savings_{\$} = Savings_{kWh} \times Rate_{\$/kWh}$

Where:

$Motor_{HP}$ =	Motor horsepower identified on motor nameplate
$Savings_{kWh}$ =	Actual annual electric consumption savings in kWh
$Savings_{\$}$ =	Actual annual electric savings in dollars
$Rate_{\$/kWh}$ =	Electrical consumption rate in dollars per kWh
Baseline Hours =	Runtime hours shown on Schedule B

Additional guaranteed energy savings for this UCRM shall be based upon the methods described in the UAR.

UCRM 6 – Water Controls
Guaranteed energy, water and sewer savings for this UCRM shall be based upon the methods described in the UAR.

UCRM 7 – Window Film
Guaranteed energy savings for this UCRM are considered "Deemed" and they shall be applied to the guaranteed annual energy savings amount throughout the term of the Guarantee.

UCRM 8 – Window Restoration
Guaranteed energy savings for this UCRM are considered "Deemed" and they shall be applied to the guaranteed annual energy savings amount throughout the term of the Guarantee.

UCRM 9 – HVAC Upgrades
Guaranteed energy savings for this UCRM are considered "Deemed" and they shall be applied to the guaranteed annual energy savings amount throughout the term of the Guarantee.

Adjustments

Increased energy usage resulting from increasing outside air amounts to meet current building codes, air-conditioning of areas that were previously not air-conditioned and other identified adjustments shall be added to Base Year energy costs.

Operational Savings

Operational savings exist when an improvement implemented under this program reduces future repair or replacement labor and / or material monies that would have otherwise been expended if the improvement was not implemented. The operational savings described and quantified in this Guarantee shall be added to the energy savings to arrive at the total guaranteed savings amount. The stipulated operational savings calculations for this Guarantee are included in the UAR. All operational savings are considered Stipulated Savings such that the annual operational savings amounts identified in the UAR shall be applied annually to the guaranteed annual operational savings amount throughout the term of the Guarantee.

Energy Monitoring

Energy monitoring services shall be performed by the Provider as described in this Guarantee. The Guarantee is void if the Owner ceases paying the Energy Monitoring fees identified below.

The annual Energy Monitoring fees for PSI are shown below and shall be paid for the previous 6 months of documented work.

Year	Price
1	$24,040
2	$24,521
3	$25,011
3	$25,511
5	$26,022
6	$26,542

7	$27,073
8	$27,614
9	$28,167
10	$28,730
11	$29,305
12	$29,891
13	$30,489
14	$31,098
15	$31,720

- Note: The Owner has the right to request that the Provider change the scope of this Guarantee at the end of each annual guaranteed period to reduce monitoring

Other Requirements

The Owner agrees to maintain all relevant equipment / systems affecting energy efficiency such that the condition of the existing equipment / systems during the term of Guarantee is at least equal to their condition at the completion of this Contract. The Owner also agrees to properly maintain all new and existing equipment and operate all of the new and existing systems as described in the Proposal, Installation Contract and Guarantee. If the Owner fails to operate his equipment / systems as described herein and it results in reduced energy or operational savings, then actual energy or operational savings shall be adjusted to the benefit of the Provider to offset lost energy savings caused by such failures by the Owner.

The calculations contained within this Guarantee shall be used exclusively in determining the actual savings over the term of the Guarantee. No additional monitoring or verification methods shall be used in determining the performance of this Guarantee related to energy or operational savings, unless agreed to in writing by both the Owner and Provider. By signing below, the Owner and Provider are fully accepting this Guarantee and all of its provisions, requirements, calculations, amounts and conditions.

Hays County

By: _____

_____, President

Date: _____

Performance Services, Inc.

By: _____

Timothy P. Thoman , President

Date: _____

DRAFT

Exhibit “J” – Sample Annual Savings Report

Hamilton Southeastern Schools

Geist Elementary School

Year 4 – Quarter 4 Review

Performance Services

TABLE OF CONTENTS

GUARANTEE RESULTS	Page #:
Executive Summary	**1**
Savings Summary – Actual vs. Guaranteed	**2**
Detailed Energy Savings Breakdown	**3**
Utility Comparison	**4**
Utility Data – Baseline usage vs. Current Usage	**5**
Actual Equipment Runtimes	**6**
Fan Motor Savings for boiler	**10**
Variable Fan Speed Conversion Savings	**11**
Outside Air Savings	**12**
Chiller Savings	**13**

Executive Summary

This Year 4 – Quarter 4 Guarantee Report contains the savings results for the period of time between October 1, 2014 and September 30, 2015. This report is intended to provide an update on the savings performance to date and to help uncover potential operating problems.

ENERGY SAVINGS:

Actual Measured Energy Savings:	$66,456	(electric)
	$22,904	(gas)
	$89,360	
Guarantee Savings (12 months)	**$66,288**	

Actual energy savings for the fourth guarantee year exceeded guaranteed energy savings by $23,072 after adjusting for utility rate changes, operating schedule variations, and owner overrides. The Guarantee is based on a combination of measured, verified, and calculated savings that are the most accurate methods of determining actual savings.

NEXT REPORT:

We will provide the Year 5 – Quarter 1 Guarantee Report in February 2016. Please feel free to contact us at 888-390-2700 with any questions or comments.

CONTACTS:

- Corey Haggard, Performance Assurance Analyst
- Chris Rainey, Engineering Manager
- Scott Morris, Operations Vice President
- Scott Zigmond, Sales and Marketing Vice President
- Tim Thoman, President
- Office: 888-390-2700

Performance Services

Annual Guaranteed Savings Report Summary

Year 4 - Quarter 4 (October 1, 2014 - September 30, 2015)

Description	Guaranteed Savings	Actual Savings	Net Difference
ENERGY SAVINGS			
Geist Elementary			
* Electric	48,202	66,456	18,254
* Gas	18,085	22,904	4,818
SAVINGS	**66,288**	**89,360**	**23,072**

Performance Services

Energy Savings Summary

Year 4 Quarter 4 (October 1, 2014 - September 30, 2015)

Improvements	Utility Tracking Savings			Measured and Verified Savings			Fixed Savings			Total Savings
	Guaranteed YTD	Actual YTD	Difference YTD	Guaranteed YTD	Actual YTD	Difference YTD	Guaranteed YTD	Actual YTD	Difference YTD	Actual YTD
GEIST ELEMENTARY										
GES-1 Jockey Boiler Installation & GES-2 AHU VFD & Control Modifications										
* Savings due to replacement of old boilers with high efficiency units	5,446		(5,446)	-	-	-	-			-
* Savings due to elimination of summer boiler reheat	5,351		(5,351)				-	-	-	-
* Savings due to fan replacement and runtime reduction							498	663	166	663
* Adjustment for additional of pump with new boiler			-	(653)	(898)	(245)			-	(898)
* Savings due to reduced OA resulting from less fan runtime	4,186		(4,186)				3,547	4,729		4,729
* Savings due to controlling outside air with CO2 sensors	3,102		(3,102)				294	392		392
Gas Savings - Utility Tracking Savings from Bills (Sub total Utility Tracking)	18,085		(18,085)							-
* Savings due to fan replacement and runtime reduction				6,911	9,603	2,692				9,603
* Savings due to reducing speed on AHUs and pumps							5,119	6,825	1,706	6,825
* Savings due to pumping changes				20,968	29,785	8,817				29,785
* Savings due to reduced compressor runtime							11,519	15,358	3,839	15,358
Geist Elementary School Total Savings (not including adjustments)	**18,085**	**22,904**	**4,818**	**27,226**	**38,490**	**-**	**20,976**	**27,967**	**5,710**	**66,456**
BASELINE ADJUSTMENTS										-
* Baseyear adjustment to provide 15 CFM/person outside air per current code	(2,278)	(2,278)	-				(156)	(187)	(31)	(2,465)
Subtotal of adjustments	***(2,278)***	***(2,278)***	**-**	**-**	**-**	**-**	***(156)***	***(187)***	***(31)***	***(2,465)***

No. of winter months into guarantee 7

No. of summer months into guarantee 5

Total 12

Performance Services

Utility Bill VS. Actual Savings Comparison

Year 4

Description	Utility Bill Savings	Outside Air & Motor Adjustments	Owner Override Impact	Anticipated Utility Bill Change
UTILITY SAVINGS				
Geist Elementary				
* Electric (not weather adjusted)	32,721	187	20,632	53,541
* Gas (weather adjusted)	22,904		(5,747)	17,157
SAVINGS	**55,625**		**14,886**	**70,698**

NOTE:

1 Actual savings are calculated as defined in the Performance Guarantee Agreement, not based on raw utility data. Raw utility data is not used to measure actual energy savings because it is inaccurate and very time consuming. However, we feel it is important to compare raw utility data to the actual savings as a cross check. Therefore, we have provided raw utility data with this report. After adjusting for utility rate changes, weather, increased fresh air, air-conditioning additional areas and owner overrides the raw utility data corresponds to within 21% or $18,662 of the actual savings.

Performance Services

Weather Adjusted Utility Bill Savings

Buildings:

Geist Elementary

ELECTRIC

Utility: Central Indiana Power
Meter #

Timeframe			Current Year			Base Year			Savings		
Previous Year	Current Year	Month	Usage (kWh)	Rate ($ / kWh)	Raw Costs ($)	Raw Usage (kWh)	Rate ($ / kWh)	Raw Costs ($)	Usage (kWh)	Rate ($ / kWh)	Savings ($)
2008	2014	Oct	99,600	$ 0.1078	$ 10,733	147,900	$ 0.0949	$ 14,039	48,300	$ 0.1078	$ 5,205
2008	2014	Nov	108,000	$ 0.1077	$ 11,631	139,200	$ 0.0985	$ 13,718	31,200	$ 0.1077	$ 3,360
2008	2014	Dec	93,300	$ 0.1078	$ 10,060	99,900	$ 0.0991	$ 9,900	6,600	$ 0.1078	$ 712
2008	2015	Jan	102,000	$ 0.1077	$ 10,990	109,200	$ 0.0885	$ 9,665	7,200	$ 0.1077	$ 776
2008	2015	Feb	115,800	$ 0.1076	$ 12,464	107,700	$ 0.0907	$ 9,766	(8,100)	$ 0.1076	$ (872)
2008	2015	Mar	108,300	$ 0.1077	$ 11,663	125,100	$ 0.0904	$ 11,312	16,800	$ 0.1077	$ 1,809
2008	2015	Apr	94,500	$ 0.1078	$ 10,189	105,000	$ 0.0907	$ 9,526	10,500	$ 0.1078	$ 1,132
2008	2015	May	107,000	$ 0.1028	$ 11,000	131,100	$ 0.0904	$ 11,846	24,100	$ 0.1028	$ 2,478
2008	2015	Jun	90,000	$ 0.1111	$ 10,000	143,700	$ 0.0902	$ 12,965	53,700	$ 0.1111	$ 5,967
2008	2015	Jul	90,000	$ 0.1111	$ 10,000	111,900	$ 0.0909	$ 10,169	21,900	$ 0.1111	$ 2,433
2008	2015	Aug	107,100	$ 0.1077	$ 11,535	150,000	$ 0.0904	$ 13,565	42,900	$ 0.1077	$ 4,620
2008	2015	Sep	117,300	$ 0.1076	$ 12,625	164,700	$ 0.0824	$ 13,565	47,400	$ 0.1076	$ 5,102
Total			1,232,900	$ 0.1078	$ 132,890	1,535,400	$ 0.0912	$ 140,036	302,500	$ 0.1078	**$ 32,721**

$ 0.1078

GAS

Utility: Vectren/ProLiance
Meter #

Timeframe			Current Year				Base Year						Savings		
Previous Year	Current Year	Month	Weather (HDD)	Usage (Therms)	Rate ($ / Therm)	Raw Costs ($)	Weather (HDD)	Raw Usage (Therms)	Rate ($ / Therm)	Raw Costs ($)	Weather Adjustment	Adj. Usage (therms)	Usage (Therms)	Rate ($ / Therm)	Savings ($)
2008	2014	Oct	335	271	$ 1.1567	$ 313	298	1,427	$ 1.3922	$ 1,986	1.12	1,715	1,444	$ 1.3922	$ 2,011
2008	2014	Nov	865	639	$ 0.8467	$ 541	692	2,274	$ 1.1628	$ 2,644	1.25	3,100	2,461	$ 1.1628	$ 2,862
2008	2014	Dec	974	2,722	$ 0.7876	$ 2,144	1,055	4,091	$ 0.9980	$ 4,083	0.92	4,171	1,448	$ 0.9980	$ 1,446
2008	2015	Jan	1,224	3,602	$ 0.7065	$ 2,545	1,118	4,803	$ 1.1417	$ 5,483	1.09	5,675	2,073	$ 1.1417	$ 2,367
2008	2015	Feb	1,249	3,877	$ 0.6996	$ 2,712	1,015	3,330	$ 1.0146	$ 3,379	1.23	4,477	600	$ 1.0146	$ 608
2008	2015	Mar	790	711	$ 0.7608	$ 541	755	4,117	$ 1.1207	$ 4,614	1.05	4,590	3,879	$ 1.1207	$ 4,347
2008	2015	Apr	313	818	$ 0.7793	$ 638	342	3,456	$ 1.2237	$ 4,229	0.92	3,291	2,473	$ 1.2237	$ 3,026
2008	2015	May	79	639	$ 0.8436	$ 539	179	1,888	$ 1.3497	$ 2,548	1.00	1,888	1,249	$ 1.3497	$ 1,685
2008	2015	Jun	16	418	$ 0.9511	$ 398	-	1,530	$ 1.1825	$ 1,809	1.00	1,530	1,112	$ 1.1825	$ 1,315
2008	2015	Jul	-	333	$ 1.0285	$ 343	-	1,017	$ 1.5327	$ 1,559	1.00	1,017	684	$ 1.5327	$ 1,048
2008	2015	Aug	2	322	$ 1.0311	$ 332	-	945	$ 1.3073	$ 1,235	1.00	945	623	$ 1.3073	$ 814
2008	2015	Sep	19	390	$ 0.9846	$ 384	9	1,686	$ 1.0602	$ 1,788	1.00	1,686	1,296	$ 1.0602	$ 1,374
Total			5,866	14,743	$ 0.7753	$ 11,429	5,463	30,563	$ 1.1569	$ 35,357	1.04	34,085	19,342	$ 1.1569	**$ 22,904**

$ 1.1569

Performance Services

Actual Equipment Usage

Year 4 - Quarter 1 (October 1, 2014 - December 31, 2014)

Building	System ID	October					November					December					1st Quarter Savings							
		Base Yr. (Hours)	Guar. (Hours)	Actual (Hours)	Adjusted (Hours)	Saved (Hours)	Base Yr. (Hours)	Guar. (Hours)	Actual (Hours)	Adjusted (Hours)	Saved (Hours)	Base Yr. (Hours)	Guar. (Hours)	Actual (Hours)	Adjusted (Hours)	Saved (Hours)	Base Yr. (Hours)	Guar. (Hours)	Actual (Hours)	Adjusted (Hours)	Saved (Hours)	Power (kW)	kWh Rate (kWh / Hr)	Savings ($)
		31	31				30	30				31	31				92	92						
																	0	0						
Geist Elementary	VU-A1	221	155	35	(120)	66	214	150	25	(126)	64	221	155	32	(124)	66	657	460	91	(369)	197	7.0	$ 0.109	$ 151
Geist Elementary	VU-D1	221	155	252	97	66	214	150	197	47	64	221	155	155	(0)	66	657	460	604	144	197	7.0	$ 0.109	$ 151
Geist Elementary	VU-E1	221	155	155	(0)	66	214	150	77	(73)	64	221	155	0	(155)	66	657	460	232	(228)	197	4.7	$ 0.109	$ 101
Geist Elementary	VU-F1	221	155	141	(14)	66	214	150	0	(150)	64	221	155	86	(69)	66	657	460	227	(233)	197	18.7	$ 0.109	$ 402
Geist Elementary	Tower Fan	300	281	281	0	19	290	272	272	0	18	300	281	281	0	19	890	834	834	0	56	7.0	$ 0.109	$ 43
Geist Elementary	Exhaust Fans (10 Total)	300	166	135	(31)	134	290	161	103	(58)	129	300	166	96	(70)	134	890	493	334	(159)	397	3.7	$ 0.109	$ 162
Geist Elementary	Heat Pumps (75 Total)	300	253	215	(37)	47	290	245	157	(88)	46	300	253	149	(104)	47	890	750	521	(229)	140	32.9	$ 0.109	$ 503
Geist Elementary	Office HP's (3 Total)	300	281	215	(66)	19	290	272	157	(115)	18	300	281	149	(132)	19	890	834	521	(313)	56	1.0	$ 0.109	$ 6
Geist Elementary	Gym HP's (2 Total)	300	296	280	(16)	4	290	287	189	(97)	4	300	296	193	(103)	4	890	879	662	(217)	11	4.0	$ 0.109	$ 5
Geist Elementary	Jockey Boiler Pump	-	658	1	(657)	(658)	-	637	109	(528)	(637)	-	658	144	(514)	(658)	-	1,953	253	(1,700)	(1,953)	1.6	$ 0.109	$ (340)
Geist Elementary	Hot Water Pumps	744	343	2	(340)	401	720	332	250	(81)	388	720	343	301	(41)	377	2,184	1,017	554	(463)	1,167	11.2	$ 0.109	$ 1,429
Geist Elementary	Heat Pump Loop Pumps	744	253	744	491	491	720	272	721	449	448	720	281	744	463	439	2,184	806	2,208	1,402	1,378	35.1	$ 0.109	$ 5,295
Geist Elementary	Tower Pumps	-	-	640	640	-	-	-	193	193	-	-	-	150	150	-	-	-	983	983	-	22.4	$ 0.109	$ -
Total																								**$ 7,908**

Hours in tan are Guaranteed hours which were used as we had unreliable runtime data for this point and this equipment has no schedule to use in place of actual hours. Guaranteed hours are the best estimate we have.

Performance Services

Actual Equipment Usage

Year 4 - Quarter 2 (October 1, 2014 - March 31, 2015)

Building	System ID	January					February					March					2nd Quarter Savings							
		Base Yr. (Hours)	Guar. (Hours)	Actual (Hours)	Adjusted (Hours)	Saved (Hours)	Base Yr. (Hours)	Guar. (Hours)	Actual (Hours)	Adjusted (Hours)	Saved (Hours)	Base Yr. (Hours)	Guar. (Hours)	Actual (Hours)	Adjusted (Hours)	Saved (Hours)	Base Yr. (Hours)	Guar. (Hours)	Actual (Hours)	Adjusted (Hours)	Saved (Hours)	Power (kW)	kWh Rate (kWh / Hr)	Savings ($)
		31	31				28	28				31	31				90	90						
																	0	0						
Geist Elementary	VU-A1	221	155	13	(142)	66	200	140	36	(105)	60	221	155	56	(99)	66	643	450	104	(346)	193	7.0	$ 0.109	$ 148
Geist Elementary	VU-D1	221	155	131	(24)	66	200	140	0	(140)	60	221	155	0	(155)	66	643	450	131	(319)	193	7.0	$ 0.109	$ 148
Geist Elementary	VU-E1	221	155	0	(155)	66	200	140	0	(140)	60	221	155	0	(155)	66	643	450	0	(450)	193	4.7	$ 0.109	$ 98
Geist Elementary	VU-F1	221	155	17	(138)	66	200	140	0	(140)	60	221	155	0	(155)	66	643	450	17	(433)	193	18.7	$ 0.109	$ 394
Geist Elementary	Tower Fan	300	281	281	0	19	271	254	254	0	17	300	281	281	0	19	870	816	816	0	55	7.0	$ 0.109	$ 42
Geist Elementary	Exhaust Fans (10 Total)	300	166	160	(6)	134	271	150	188	38	121	300	166	207	41	134	870	482	555	73	388	3.7	$ 0.109	$ 159
Geist Elementary	Heat Pumps (75 Total)	300	253	314	61	47	271	228	455	227	43	300	253	263	10	47	870	734	1,032	298	137	32.9	$ 0.109	$ 492
Geist Elementary	Office HP's (3 Total)	300	281	314	33	19	271	254	455	201	17	300	281	263	(18)	19	870	816	1,032	216	55	1.0	$ 0.109	$ 6
Geist Elementary	Gym HP's (2 Total)	300	296	393	97	4	271	267	502	234	3	300	296	330	34	4	870	860	1,226	366	11	4.0	$ 0.109	$ 5
Geist Elementary	Jockey Boiler Pump	-	658	188	(470)	(658)	-	594	185	(409)	(594)	-	658	102	(556)	(658)	-	1,910	474	(1,436)	(1,910)	1.6	$ 0.109	$ (333)
Geist Elementary	Hot Water Pumps	744	343	354	11	401	672	310	318	8	362	720	343	255	(88)	377	2,136	995	927	(68)	1,141	11.2	$ 0.109	$ 1,397
Geist Elementary	Heat Pump Loop Pumps	744	281	744	463	463	672	228	672	443	444	720	281	742	461	439	2,136	790	2,158	1,367	1,346	35.1	$ 0.109	$ 5,170
Geist Elementary	Tower Pumps	-	-	77	77	-	-	-	37	37	-			210	210	-	-	-	324	324	-	22.4	$ 0.109	$ -
Total																								**$ 7,725**

Hours in tan are Guaranteed hours which were used as we had unreliable runtime data for this point and this equipment has no schedule to use in place of actual hours. Guaranteed hours are the best estimate we have.

Performance Services

Actual Equipment Usage

Year 4 - Quarter 3 (October 1, 2014 - June 30, 2015)

Building	System ID	April					May					June					3rd Quarter Savings							
		Base Yr. (Hours)	Guar. (Hours)	Actual (Hours)	Adjusted (Hours)	Saved (Hours)	Base Yr. (Hours)	Guar. (Hours)	Actual (Hours)	Adjusted (Hours)	Saved (Hours)	Base Yr. (Hours)	Guar. (Hours)	Actual (Hours)	Adjusted (Hours)	Saved (Hours)	Base Yr. (Hours)	Guar. (Hours)	Actual (Hours)	Adjusted (Hours)	Saved (Hours)	Power (kW)	kWh Rate (kWh / Hr)	Savings ($)
		30	30				31	31				30	30				91	91						
																	0	0						
Geist Elementary	VU-A1	214	150	75	(75)	64	221	155	77	(78)	66	214	-	113	113	214	650	305	265	(40)	345	7.0	$ 0.109	$ 264
Geist Elementary	VU-D1	214	150	150	-	64	221	155	155	-	66	214	-	0	0	214	650	305	305	0	345	7.0	$ 0.109	$ 264
Geist Elementary	VU-E1	214	150	150	-	64	221	155	155	-	66	214	-	0	0	214	650	305	305	0	345	4.7	$ 0.109	$ 176
Geist Elementary	VU-F1	214	150	150	-	64	221	155	155	-	66	214	-	0	0	214	650	305	305	0	345	18.7	$ 0.109	$ 704
Geist Elementary	Tower Fan	290	272	272	0	18	300	281	281	0	19	290	272	272	0	18	880	825	825	0	55	7.0	$ 0.109	$ 42
Geist Elementary	Exhaust Fans (10 Total)	290	161	40	(121)	129	300	166	197	31	134	290	108	205	97	182	880	435	442	7	445	3.7	$ 0.109	$ 182
Geist Elementary	Heat Pumps (75 Total)	290	245	138	(106)	46	300	253	191	(61)	47	290	108	223	115	182	880	605	553	(53)	275	32.9	$ 0.109	$ 990
Geist Elementary	Office HP's (3 Total)	290	272	138	(134)	18	300	281	191	(90)	19	290	108	223	115	182	880	661	553	(108)	219	1.0	$ 0.109	$ 24
Geist Elementary	Gym HP's (2 Total)	290	287	192	(95)	4	300	296	270	(26)	4	290	108	304	196	182	880	691	766	75	190	4.0	$ 0.109	$ 83
Geist Elementary	Jockey Boiler Pump	-	637	21	(616)	(637)	-	658	7	(651)	(658)	-	-	4	4	-	-	1,295	32	(1,263)	(1,295)	1.6	$ 0.109	$ (226)
Geist Elementary	Hot Water Pumps	744	332	119	(212)	412	240	-	58	58	240	-	-	23	23	-	984	332	200	(132)	652	11.2	$ 0.109	$ 799
Geist Elementary	Heat Pump Loop Pumps	744	272	719	447	472	744	281	744	463	463	720	108	720	612	612	2,208	661	2,182	1,521	1,547	35.1	$ 0.109	$ 5,944
Geist Elementary	Tower Pumps	-	-	345	345	-	744	440	533	93	304	720	426	153	(273)	294	1,464	866	1,031	165	598	22.4	$ 0.109	$ 1,465
Total																								**$ 10,710**

Hours in tan are Guaranteed hours which were used as we had unreliable runtime data for this point and this equipment has no schedule to use in place of actual hours. Guaranteed hours are the best estimate we have.

Actual Equipment Usage

Year 4 - Quarter 4 (October 1, 2014 - September 30, 2015)

Building	System ID	July					August					September					4th Quarter Savings							
		Base Yr. (Hours)	Guar. (Hours)	Actual (Hours)	Adjusted (Hours)	Saved (Hours)	Base Yr. (Hours)	Guar. (Hours)	Actual (Hours)	Adjusted (Hours)	Saved (Hours)	Base Yr. (Hours)	Guar. (Hours)	Actual (Hours)	Adjusted (Hours)	Saved (Hours)	**Base Yr.** (Hours)	**Guar.** (Hours)	**Actual** (Hours)	**Adjusted** (Hours)	**Saved** (Hours)	**Power** (kW)	**kWh Rate** (kWh / Hr)	**Savings** ($)
		31	31				31	31				30	30				92	92						
																	0	0						
Geist Elementary	VU-A1	221	-	139	139	221	221	40	134	94	181	214	150	91	(59)	64	657	190	365	175	467	7.0	$ 0.109	$ 358
Geist Elementary	VU-D1	221	-	0	0	221	221	40	40	-	181	214	150	150	-	64	657	190	190	0	467	7.0	$ 0.109	$ 358
Geist Elementary	VU-E1	221	-	0	0	221	221	40	40	-	181	214	150	150	-	64	657	190	190	0	467	4.7	$ 0.109	$ 238
Geist Elementary	VU-F1	221	-	0	0	221	221	40	112	72	181	214	150	154	4	64	657	190	266	76	467	18.7	$ 0.109	$ 953
Geist Elementary	Tower Fan	300	177	177	(0)	123	300	281	281	0	19	290	272	272	0	18	890	730	730	(0)	160	7.0	$ 0.109	$ 122
Geist Elementary	Exhaust Fans (10 Total)	300	-	60	60	300	300	43	203	160	257	290	161	203	42	129	890	204	466	263	686	3.7	$ 0.109	$ 280
Geist Elementary	Heat Pumps (75 Total)	300	112	143	32	188	300	148	234	86	152	290	245	116	(129)	46	890	504	493	(11)	386	32.9	$ 0.109	$ 1,389
Geist Elementary	Office HP's (3 Total)	300	177	143	(34)	123	300	281	234	(47)	19	290	272	116	(156)	18	890	730	493	(237)	160	1.0	$ 0.109	$ 17
Geist Elementary	Gym HP's (2 Total)	300	112	112	0	188	300	159	283	124	141	290	287	287	1	4	890	557	682	125	332	4.0	$ 0.109	$ 145
Geist Elementary	Jockey Boiler Pump	-	-	2	2	-	-	-	5	5	-	-	-	7	7	-	-	-	14	14	-	1.6	$ 0.109	$ -
Geist Elementary	Hot Water Pumps	-	-	13	13	-	-	-	28	28	-	240	-	36	36	240	240	-	77	77	240	11.2	$ 0.109	$ 294
Geist Elementary	Heat Pump Loop Pumps	744	177	744	567	567	744	281	744	463	463	720	245	719	474	475	2,208	703	2,207	1,504	1,505	35.1	$ 0.109	$ 5,783
Geist Elementary	Tower Pumps	744	440	198	(242)	304	744	440	190	(251)	304	720	426	175	(250)	294	2,208	1,306	563	(744)	902	22.4	$ 0.109	$ 2,209
Total																								**$ 12,146**

Hours in yellow are scheduled hours which were used as the actual runtime data for these units was unreliable.

Hours in tan are Guaranteed hours which were used as we had unreliable runtime data for this point and this equipment has no schedule to use in place of actual hours. Guaranteed hours are the best estimate we have.

Performance Services

FAN MOTOR RUNTIME SAVINGS

Building	System ID	Motor HP	Break HP / Motor HP	kW / HP	Fan Speed	Fan kW	Saved Hrs / Yr	Motor Efficiency	Savings (kWh)	Rate (kWh)	Savings ($)
GES-1 Jockey Boiler Installation											
Geist Elementary	Boiler Fan	5.00	1.00	0.746	100%	4.663	1,300	80%	6,061	$ 0.109	$ 663
Subtotal for GES-1									**6,061**		**$ 663**

Note: Heat pump fan HP's are the total for all of the fan horsepowers.

Note: Tower Fan has 2-stage HP motor, assume lower motor hp of the 2 stages.

Constant Volume to Variable Speed Fan Conversion

Electric Fan Savings

Description	Full Load Power		Fan Speed		Average kW Savings (kWh)	Future Operating Hours	Savings (kWh)	Composite Consumption Rate ($)	Utility Savings ($)
	(HP)	(kW)	Current Average Amount	Future Average Amount					
GES-2 AHU VFD and CO_2 Sensor Installation and Control System Optimization									
VU-A1	7.50	5.266	100%	60%	4.13	1,400	5,780	$ 0.109	$ 633
VU-D1	7.50	5.266	100%	60%	4.13	1,400	5,780	$ 0.109	$ 633
VU-E1	5.00	3.511	100%	60%	2.75	1,400	3,853	$ 0.109	$ 422
VU-F1	20.00	14.042	100%	55%	11.71	1,400	16,388	$ 0.109	$ 1,794
Hot Water Pumps	15.00	10.532	100%	65%	7.64	4,000	30,558	$ 0.109	$ 3,344
Total for GES-2							**31,801**		**$ 6,825**

Heating and Air-conditioning Savings Due to CO_2 Control

Building	Unit Type	Quantity	Occupied Hours		Heating OA		Air-conditioned OA		Occupied Energy Change		Savings	
			Winter (Hours)	Summer (Hours)	Current (CFM)	Future (CFM)	Current (CFM)	Future (CFM)	Heating (BTU)	Cooling (BTU)	Heating $	Cooling $
Geist Elementary	VU-A1	1	1,260	140	3,860	2,500	3,860	2,500	(65,073,960)	(7,261,190)	$ 809	$ 67
Geist Elementary	VU-D1	1	1,260	140	4,105	3,500	4,105	3,500	(28,948,343)	(3,230,162)	$ 360	$ 30
Geist Elementary	VU-E1	1	1,260	140	3,550	3,000	3,550	3,000	(26,316,675)	(2,936,511)	$ 327	$ 27
Geist Elementary	VU-F1	1	1,260	140	9,000	5,000	9,000	3,500	(191,394,000)	(29,365,105)	$ 2,381	$ 269
Total for GES-2					**20,515**	**14,000**			**(311,732,978)**	**(42,792,967)**	**$ 3,878**	**$ 392**

Outside Air Heating & Cooling Savings Resulting From Reduced Runtimes

Building	Unit Type	Quantity	Future Hours		Reduced Hours		Current OA		Energy Savings/Penalties		Savings/Costs	
			Winter (Hours)	Summer (Hours)	Winter (Hours)	Summer (Hours)	Heating (CFM)	Cooling (CFM)	Heating (BTU)	Cooling (BTU)	Heating (BTU)	Cooling (BTU)
Geist Elementary	VU-A1	1	1,260	140	540	660	3,860	3,860	(79,155,090)	(97,156,547)	$ 985	$ 890
Geist Elementary	VU-D1	1	1,260	140	540	660	4,105	4,105	(84,179,183)	(103,323,219)	$ 1,047	$ 946
Geist Elementary	VU-E1	1	1,260	140	540	660	3,550	3,550	(72,798,075)	(89,353,820)	$ 906	$ 818
Geist Elementary	VU-F1	1	1,260	140	540	660	9,000	9,000	(184,558,500)	(226,530,810)	$ 2,296	$ 2,075
Total for GES-2									**(420,690,848)**	**(516,364,396)**	**$ 5,233**	**$ 4,729**

Increased Heating and Cooling Costs Due to Increased Fresh Air Amounts

Building	Unit Type	Quantity Qty	Occupied Hours		Heating OA		Air-conditioned OA		Occupied Energy Change		Dollars Change	
			Winter (Hours)	Summer (Hours)	Current (CFM)	Future (CFM)	Current (CFM)	Future (CFM)	Heating (BTU)	Cooling (BTU)	Heating $	Cooling $
Geist Elementary	VU-D1	1	1,260	140	2,053	4,105	2,053	4,105	98,209,046	10,958,523	($1,222)	($100)
Geist Elementary	VU-E1	1	1,260	140	1,775	3,550	1,775	3,550	84,931,088	9,476,920	($1,056)	($87)
Subtotal					**3,828**	**7,655**	**3,828**	**7,655**	**183,140,134**	**20,435,444**	**($2,278)**	**($187)**

Notes:

1. Minimum OA is based upon an occupancy of 25 persons in each classroom.

Performance Services

Chiller Runtime Savings

System ID	Quantity	Efficiency (kW / Ton)	Tonage per unit	Total kW	Average Output	Average kW	Average Tonage	Saved Hours / Year	Usage (kWh/yr)	Rate ($/kWh)	Savings ($/yr)
GES-2 AHU VFD and CO_2 Sensor Installation and Control System Optimization											
VU-A1	1	1.41	30.50	42.94	50%	21.47	15.25	720	15,460	$ 0.109	$ 1,692
VU-D1	1	1.41	30.50	43.01	50%	21.50	15.25	720	15,482	$ 0.109	$ 1,694
VU-E1	1	1.41	26.70	37.59	50%	18.80	13.35	720	13,534	$ 0.109	$ 1,481
VU-F1	1	1.41	88.50	124.61	50%	62.30	44.25	720	44,859	$ 0.109	$ 4,909
Heat Pumps (75 Total)	75	0.85	3.40	216.75	40%	86.70	1.36	510	44,217	$ 0.109	$ 4,839
Office HP's (3 Total)	3	0.85	2.50	6.38	35%	2.23	0.88	319	711	$ 0.109	$ 78
Gym HP's (2 Total)	2	0.85	20.00	34.00	35%	11.90	7.00	510	6,069	$ 0.109	$ 664
Total Savings for GES-2									**140,331**		**$ 15,358**

Note:

1. Average Output is calculated based on existing tonnage installed and calculated load.
   AO = (calculated load / installed tons) * (60% average annual loading)

2. Efficiency based on part load operation of 19 year old equipment, used 1.28 kW/ton x 1.10 fouling factor.

AGENDA ITEM REQUEST FORM

Hays County Commissioners Court

Tuesdays at 9:00 AM

Request forms are due in Microsoft Word Format via email by 2:00 p.m. on Wednesday.

AGENDA ITEM

Discussion and possible action to approve a resolution Authorizing the Execution and Delivery of a Public Property Finance Contract with Respect to the Acquisition, Purchase, and Financing of a County Wide Energy Conservation Project; and authorize the County Judge to execute all required documents.

ITEM TYPE	MEETING DATE	AMOUNT REQUIRED
ACTION-MISCELLANEOUS	February 21, 2017	

LINE ITEM NUMBER

AUDITOR USE ONLY

AUDITOR COMMENTS:

PURCHASING GUIDELINES FOLLOWED: N/A **AUDITOR REVIEW:** N/A

REQUESTED BY	SPONSOR	CO-SPONSOR
Garza	COBB	N/A

SUMMARY

Resolution Attached.

RESOLUTION

A RESOLUTION OF THE COMMISSIONERS COURT OF HAYS COUNTY, TEXAS AUTHORIZING THE EXECUTION AND DELIVERY OF A PUBLIC PROPERTY FINANCE CONTRACT (TAX CREDIT QUALIFIED ENERGY CONSERVATION BONDS) WITH RESPECT TO THE ACQUISITION, PURCHASE, AND FINANCING OF A COUNTY WIDE ENERGY CONSERVATION PROJECT; AUTHORIZING THE EXECUTION AND DELIVERY OF DOCUMENTS REQUIRED IN CONNECTION THEREWITH; AND AUTHORIZING ALL OTHER ACTIONS NECESSARY TO THE CONSUMMATION OF THE TRANSACTIONS CONTEMPLATED BY THIS RESOLUTION.

WHEREAS, Hays County, Texas (the *"County"*), a duly created and existing county of the State of Texas operating under the Constitution and laws of the State of Texas, is authorized by the laws of the State of Texas to purchase, acquire and finance personal property for the benefit of the County and its inhabitants and to enter into contracts with respect thereto; and

WHEREAS, the Commissioners Court of the County (the "Governing Body") desires to purchase, acquire and finance certain personal property with a cost not to exceed $1,499,083, constituting personal property necessary for the County to perform essential governmental functions (the *"Property");* and

WHEREAS, the County proposes to enter into that certain Public Property Finance Contract qualifying as a taxable energy conservation bond (the *"Agreement" or the "Finance Contract")* [Note: or use either term consistently throughout] with Government Capital Corporation and its successors and assigns (the *"Lender"),* the form of which has been presented to the governing body of the County at this meeting; and

WHEREAS, the County is authorized under the provisions of the Public Property Finance Act, as amended, Chapter 271, Subchapter A, Texas Local Government Code (the "*Act*"), to execute and deliver the Finance Contract, which may be in the form of a tax-exempt or taxable obligation, or both, of the County for purposes of providing funds to finance the Property; and

WHEREAS, Sections 54A and 54D of the Internal Revenue Code of 1986, as amended (the "*Code*"), provides authority for the issuance of Qualified Energy Conservation Bonds ("*Qualified Energy Conservation Bonds*") that are taxable obligations allowing for either a tax credit to Lender or a direct subsidy payment to the County, and $1,499,083 of Qualified Energy Conservation Bonds allocation has been awarded to Hays County, Texas by the Texas Bond Review Board and the Governing Body designates the County to use the $1,499,083 of Qualified Energy Conservation Bonds, and the project is a qualified conservation purpose as further defined in Section 54D(f) of the Code; and

NOW, THEREFORE, BE IT AND IT IS HEREBY RESOLVED by the Commissioners Court of the County as follows:

Section 1. Authorization. The County is hereby authorized to execute and deliver the Agreement, as an obligation of the County, with principal installments of [rental payments][Debt Service Payments] in an aggregate amount not to exceed $1,499,083.

Section 2. Tax Certifications. Contingent upon approval of legal counsel, the County Judge is hereby individually authorized and directed to sign any and all documents required to enter into the Finance Contract, including any required certificates to ensure the Finance Contract does not constitute an issue of arbitrage bonds for purposes of Section 148 of the Code and, in the case of the Finance Contract, is executed and delivered as a Qualified Energy Conservation Bond for purposes of Sections 54A and 54D of the Code. The County Judge is also hereby individually authorized and directed to sign any tax certificates documenting the following requirements:

a. the proceeds will be spent on qualified conservation purposes as more particularly described in Section 54D(f) of the Code;
b. no more than two percent of the proceeds will be spent on costs of issuance;
c. all proceeds, including interest earnings, will be spent within three years of the date of the Finance Contract;
d. within six months of the date of the Finance Contract, the County will enter into binding contracts to spend at least 10% of the available project proceeds;
e. the County has required that the contractors on the project be paid in accordance with the Davis-Bacon Act; and
f. the County shall designate the Finance Contract as a Qualified Energy Conservation Bond and make such additional designations as may be required by Section 54A and 54D of the Code.

Section 3. Approval of Documents. The form, terms and provisions of the Agreement are hereby approved in substantially the forms presented at this meeting, with such insertions, omissions and changes as shall be approved by the County Judge or other members of the governing body of the County executing the same, the execution of such documents being conclusive evidence of such approval; and the County Judge is hereby authorized and directed to execute, and the County Clerk is hereby authorized and directed to attest and countersign, the Agreement and any related Exhibits attached thereto and to deliver the Agreement (including such Exhibits) to the respective parties thereto, and the County Clerk is hereby authorized to affix the seal of the Governing Body to such documents.

Section 4. Other Actions Authorized. The officers and employees of the County shall take all action necessary or reasonably required by the parties to the Agreement to carry out, give effect to and consummate the transactions contemplated thereby (including the execution and delivery of any tax certificate and agreement, as contemplated in the Agreement) and to take all action necessary in conformity therewith, including, without limitation, the execution and delivery of any closing and other documents required to be delivered in connection with the Agreement.

Section 5. No General Liability. Nothing contained in this Resolution, the Agreement nor any other instrument shall be construed with respect to the County as incurring a pecuniary liability or charge upon the general credit of the County or against its taxing power, nor shall the breach of any agreement contained in this Resolution, the Agreement or any other instrument or document executed in connection therewith impose any pecuniary liability upon the County or any charge upon its general credit or against its taxing power, except to the extent that the

[Rental Payments][Debt Service Payments] payable under the Agreement are special limited obligations of the County as provided in the Agreement.

Section 6. Appointment of Authorized County Representatives. The County Judge is hereby designated to act as authorized representatives of the County for purposes of the Agreement and the transactions contemplated by this Resolution until such time as the County shall designate any other or different authorized representative for purposes of the Agreement.

Section 7. Appointment of Special Counsel. The County hereby appoints Orrick, Herrington & Sutcliffe LLP to act as Special Counsel on this transaction.

Section 8. Severability. If any section, paragraph, clause or provision of this Resolution shall for any reason be held to be invalid or unenforceable, the invalidity or unenforceability of such section, paragraph, clause or provision shall not affect any of the remaining provisions of this Resolution.

Section 9. *Repealer.* All bylaws, orders and resolutions or parts thereof, inconsistent herewith, are hereby repealed to the extent only of such inconsistency. This repealer shall not be construed as reviving any bylaw, order, resolution or ordinance or part thereof.

Section 10. Effective Date. This Resolution shall be effective immediately upon its approval and adoption.

[REMAINDER OF PAGE INTENTIONALLY LEFT BLANK]

PASSED AND APPROVED this February 21, 2017.

_____
County Judge, Hays County, Texas

(SEAL OF COMMISSIONERS COURT)

ATTEST:

By: _____
County Clerk, Hays County, Texas

GENERAL CERTIFICATE

THE STATE OF TEXAS §
§
COUNTY OF HAYS §

I, the undersigned, County Judge of Hays County, Texas (the "*County*"), **DO HEREBY CERTIFY** as follows:

1. The County is a duly created and existing county of the State of Texas operating under the Constitution and laws of the State of Texas.

2. The duly qualified and acting officers of the County are as follows:

Bert Cobb, M.D.	County Judge
Debbie Ingalsbe	Commissioner, Precinct 1
Mark Jones	Commissioner, Precinct 2
Will Conley	Commissioner, Precinct 3
Ray Whisenant	Commissioner, Precinct 4

3. The Public Property Finance Contract dated March 2, 2017 by and between Government Capital Corporation and the County (the “Finance Contract”) has been duly and officially executed by the undersigned with their manual or facsimile signature in the same manner appearing hereon, and the undersigned hereby adopt and ratify their respective signatures in the manner appearing on the Finance Contract whether in manual or facsimile form, as the case may be, as their true, genuine and official signatures.

4. On the date of the execution of the Finance Contract and on the date hereof, we were and are the duly qualified and acting officials of the County indicated below.

5. The legally adopted proper and official corporate seal of the Commissioners Court of the County is impressed, imprinted or lithographed on the Finance Contract and impressed on this Certificate.

6. No litigation of any nature is now pending before any federal or state court, or administrative body, or to our knowledge threatened, to which the County is a party that seeks to restrain or enjoin the issuance or delivery of the Finance Contract or questioning the issuance or private placement of the Finance Contract, or the authority or action of the governing body of the County relating to the issuance or private placement of the Finance Contract, or the appropriation of lawfully available funds by the County or materially affecting the assessment or collection of ad valorem taxes by the County; and that neither the corporate existence or boundaries of the County nor the right to hold office of any member of the governing body of the County or any other elected or appointed official of the County is being contested or otherwise questioned.

7. No authority or proceeding for the issuance, sale or delivery of the Finance Contract, passed and adopted by the governing body of the County, has been amended, repealed,

revoked, rescinded or otherwise modified since the date of passage thereof, and all such proceedings and authority relating to the issuance and sale of the Finance Contract remain in full force and effect as of the date of this Certificate.

WITNESS OUR HANDS AND THE SEAL OF THE COUNTY, this the 2nd of March, 2017.

HAYS COUNTY, TEXAS

By:_____
County Judge

(SEAL OF COMMISSIONERS COURT)

ATTEST:

By: _____
County Clerk, Hays County, Texas

CERTIFICATE OF COUNTY CLERK

THE STATE OF TEXAS §
§
COUNTY OF HAYS §

We, the undersigned officers of Hays County, Texas (the "*County*"), **DO HEREBY CERTIFY** as follows:

1. The Commissioners Court of the County convened in a regular meeting on February 21, 2017, at the regular meeting place thereof, within the County, and the roll was called of the duly constituted officers and members of the Commissioners Court, to-wit:

Bert Cobb, M.D.	County Judge
Debbie Ingalsbe	Commissioner, Precinct 1
Mark Jones	Commissioner, Precinct 2
Will Conley	Commissioner, Precinct 3
Ray Whisenant	Commissioner, Precinct 4

all of said persons except _____, were present at said meeting, thus constituting a quorum. Among other business considered at said meeting, the attached resolution entitled:

> A RESOLUTION OF THE COMMISSIONERS COURT OF HAYS COUNTY, TEXAS AUTHORIZING THE EXECUTION AND DELIVERY OF A PUBLIC PROPERTY FINANCE CONTRACT (TAX CREDIT QUALIFIED ENERGY CONSERVATION BONDS) WITH RESPECT TO THE ACQUISITION, PURCHASE, AND FINANCING OF A COUNTY WIDE ENERGY CONSERVATION PROJECT; AUTHORIZING THE EXECUTION AND DELIVERY OF DOCUMENTS REQUIRED IN CONNECTION THEREWITH; AND AUTHORIZING ALL OTHER ACTIONS NECESSARY TO THE CONSUMMATION OF THE TRANSACTIONS CONTEMPLATED BY THIS RESOLUTION.

(the *"Resolution*") was duly introduced for the consideration of such Commissioners Court and those present have had an opportunity to read in full said Resolution. It was then duly moved and seconded that such order be adopted; and, after due discussion, such motion, carrying with it the adoption of such order, prevailed and carried by the following vote:

___ voted *"For"* ___ voted *"Against"* ___ abstained

all as shown in the official Minutes of the Commissioners Court for the meeting held on the aforesaid date.

2. That a true, full and correct copy of such Resolution adopted at the meeting described in the above and foregoing paragraph is attached to and follows this certificate; that

such Resolution has been duly recorded in the Commissioners Court minutes of such meeting; that the above and foregoing paragraph is a true, full and correct excerpt from such minutes of such meeting pertaining to the passage of such Resolution; that the persons named in the above and foregoing paragraph are the duly chosen, qualified and acting officers and members of the Commissioners Court as indicated therein; that each of the officers and members of the Commissioners Court was duly and sufficiently notified officially and personally, in advance of the time, place and purpose of such meeting, and that such Resolution would be introduced and considered for passage at such meeting, and each of such officers and members consented, in advance, to the holding of such meeting for such purpose; and that such meeting was open to the public, and public notice of the time, place and purpose of such meeting was given all as required by Chapter 551, Texas Government Code, as amended.

SIGNED AND SEALED this 21st day of February, 2017.

_____
County Judge, Hays County, Texas

(SEAL OF COMMISSIONERS COURT)

ATTEST:

By: _____
County Clerk, Hays County, Texas

AGENDA ITEM REQUEST FORM

Hays County Commissioners Court

Tuesdays at 9:00 AM

Request forms are due in Microsoft Word Format via email by 2:00 p.m. on Wednesday.

AGENDA ITEM

Discussion and possible action to approve a resolution Authorizing the Financing of a County Wide Energy Conservation Project; and authorize the County Judge to execute all required documents.

ITEM TYPE	MEETING DATE	AMOUNT REQUIRED
ACTION-MISCELLANEOUS	February 21, 2017	

LINE ITEM NUMBER

AUDITOR USE ONLY

AUDITOR COMMENTS:

PURCHASING GUIDELINES FOLLOWED: N/A **AUDITOR REVIEW:** N/A

REQUESTED BY	SPONSOR	CO-SPONSOR
Garza	COBB	N/A

SUMMARY

Resolution Attached.

HAYS COUNTY
San Marcos, Texas

SUMMARY OF TERMS
TAX-EXEMPT PUBLIC PROPERTY FINANCE ACT CONTRACT

PROJECT:	Performance Services, Inc. Energy Conservation Project
ISSUER:	Hays County, Texas
RATING:	N/R
STRUCTURE:	NBQ, Tax-Exempt Public Property Finance Act Contract pursuant to Chapter 271, Subchapter A, Texas Local Government Code

SOURCE/USE OF FUNDS:

Sources:		
PPFC Proceeds	$3,863,000	
TOTAL SOURCES		**$3,863,000**
Uses:		
Project Cost	$3,796,679	
Cost of Issuance	$ 66,321	
TOTAL USES		**$3,863,000**

SPECIAL COUNSEL:	Orrick, Herrington & Sutcliffe, LLP, Houston, TX *
OBLIGATION TERM:	15 Years, 10 months
TAX-EXEMPT INTEREST RATE:	2.57%
PAYMENT AMOUNT:	**See attached payment schedule**
ESTIMATED CLOSING DATE:	February 24, 2017
FIRST PAYMENT DATE:	December 15, 2017; annually thereafter. Callable subject to Make Whole provisions in loan document beginning 12/15/2024
ANNUAL PAYING AGENT FEE:	$300

* Issuance cost includes cost of special counsel.

Above terms are subject to change if Commissioners Court approval occurs after February 14, 2017 or funding occurs after February 28, 2017.

The transaction described herein is an arm's length, commercial transaction between you and Government Capital Corporation ("GCC"), in which GCC;(i)is acting solely for its own financial and other interest that may differ from yours;(ii)is not acting as your municipal advisor or financial advisor, and has no fiduciary duty to you with respect to this transaction; and (iii) is not recommending that you take action with respect to this transaction.

Public Property Finance Contract, Series 2017B

Funding Date 2/24/2017

Dates	Principal Amount	Interest Rate	Interest	Net Total Debt Service to Hays County	Net Fiscal Year Debt Service to Hays County
12/15/2017	$0.00	2.57	$80,250.61	$80,250.61	$80,250.61
12/15/2018	$305,219.00	2.57	$99,279.10	$404,498.10	$404,498.10
12/15/2019	$312,834.00	2.57	$91,434.97	$404,268.97	$404,268.97
12/15/2020	$320,498.00	2.57	$83,395.14	$403,893.14	$403,893.14
12/15/2021	$328,351.00	2.57	$75,158.34	$403,509.34	$403,509.34
12/15/2022	$208,496.00	2.57	$66,719.72	$275,215.72	$275,215.72
12/15/2023	$213,604.00	2.57	$61,361.37	$274,965.37	$274,965.37
12/15/2024	$218,837.00	2.57	$55,871.75	$274,708.75	$274,708.75
12/15/2025	$224,199.00	2.57	$50,247.64	$274,446.64	$274,446.64
12/15/2026	$229,691.00	2.57	$44,485.72	$274,176.72	$274,176.72
12/15/2027	$235,319.00	2.57	$38,582.66	$273,901.66	$273,901.66
12/15/2028	$241,084.00	2.57	$32,534.97	$273,618.97	$273,618.97
12/15/2029	$246,991.00	2.57	$26,339.11	$273,330.11	$273,330.11
12/15/2030	$253,042.00	2.57	$19,991.44	$273,033.44	$273,033.44
12/15/2031	$259,242.00	2.57	$13,488.26	$272,730.26	$272,730.26
12/15/2032	$265,593.00	2.57	$6,825.74	$272,418.74	$272,418.74
Total	**$3,863,000**		**$845,966.54**	**$4,708,966.54**	**$4,708,966.54**

Sources & Uses of Funds

Sources:	
Public Property Finance Contract	$3,863,000
Total Sources	$3,863,000
Uses:	
Deposit to Project Fund	$3,796,679
Costs of Issuance	$66,321
Total Uses	$3,863,000

Prepared by Government Capital Corporation, 1-26-17

RESOLUTION

AUTHORIZING THE FINANCING OF AN ENERGY EFFICIENCY PROJECT

WHEREAS, the Commissioners Court of Hays County, a political subdivision of the State of Texas (the "County"), has determined to implement strategies to improve the efficiency of its operations, including its facilities; and

WHEREAS, the County has determined it to be in the beneficial interest of the County to enter into a Financing Agreement ("Agreement") with Government Capital Corporation ("GCC") for the purpose of implementing an energy efficiency project; and

WHEREAS, financing agreements of this type are authorized under Texas Local Government Code Section 271.005; and

WHEREAS, it is necessary to approve entering into the Agreement and to authorize the County Judge to execute and make other determinations pertinent to the Agreement, subject to the review and approval of the County's General Counsel.

NOW, THEREFORE, BE IT RESOLVED THAT:

1. The County Judge is hereby authorized to execute the Agreement, together with such exhibits, attachments, and related documents; and
2. With input from General Counsel, the County Judge is authorized to execute any additions, changes, or modifications to the Agreement, as long as those amendments do not have a negative fiscal impact on current funds held by Hays County; and
3. Any and all proposed amendments that are expected to have a negative fiscal impact on current funds of the County shall be brought to the Hays County Commissioners Court for consideration.

The Resolution having come to a vote:

YEAS:
NAYS:
ABSTAIN:
ABSENT:

ADOPTED THIS THE ____ day of _____, 2017 at a Regular Meeting of the Hays County Commissioners Court.

AUTHORIZED SIGNATURE:

_____
Judge Bert Cobb, M.D.
Hays County Judge

ATTEST:

_____
Liz Q. Gonzalez
Hays County Clerk

PUBLIC PROPERTY FINANCE ACT CONTRACT

THIS Public Property Finance Act Contract **No.7669** (hereafter referred to as the "Finance Contract") is dated as of **February 24, 2017**, by and between **Government Capital Corporation**, a Texas corporation (herein referred to as "GCC"), and ~~the~~ **Hays County**, a political sub-division ~~or agency~~ of the State of Texas (hereinafter referred to as the "Issuer").

WITNESSETH: In furtherance of the providing by GCC of financing to the Issuer in connection with the Issuer's acquisition from Performance Services, Inc. that is more fully described on EXHIBIT A attached hereto (the "Property"), and in consideration of the mutual covenants and conditions hereinafter set forth, pursuant to the provisions of the Public Property Finance Act, Chapter 271, Subchapter A, Texas Local Government Code, as amended (the "Act"), the parties agree as follows:

1. Term and Payments. The Issuer hereby covenants and agrees to pay to the order of GCC and GCC's successors and assigns those principal and interest installment amounts in those sums set forth on EXHIBIT B attached hereto (the "Payments") on or before those dates per installment that are more fully set forth on EXHIBIT B (the "Payment Dates"). It is acknowledged and understood that GCC may assign its rights hereunder to a third party and that notice of said assignment shall be provided to the Issuer and that the Issuer, thereafter, shall look to and consider said assignee as the party to whom all of the Issuer's duties hereunder are owed. The obligation of the Issuer to make the Payments shall not be subject to set-off, counterclaim, or recoupment to the extent permitted by law. The interest is calculated on the basis of a 30/360-day year on the unpaid principal amounts from the Schedule Date of the EXHIBIT B.

2. Security, Levy of Taxes, Budgeting.

(a) During the term of this Finance Contract, the Issuer covenants that prior to adopting a budget for any ensuing fiscal year it shall place in its proposed budget for such ensuing fiscal year an amount necessary to pay the Finance Contract Payments for such ensuing fiscal year, and that the final budget for each fiscal year shall set aside and appropriate out of Ad Valorem Taxes and other revenues and funds lawfully available therefore an amount sufficient to pay the Finance Contract Payments. The Issuer hereby agrees to assess and collect, a continuing direct annual Ad Valorem Tax on all taxable property within the boundaries of the Issuer, within the limitations prescribed by law, at a rate from year to year sufficient, together with such other revenues and funds lawfully available to the Issuer for the payment of the Payments, to provide funds each year to pay the Payments, full allowance being made for delinquencies and costs of collection. Such taxes and such revenues and funds in an amount sufficient to make the Payments are pledged to GCC and GCC's successors and assigns for such purpose as the same shall become due and payable under this Finance Contract.

(b) The Issuer waives all rights of set-off, recoupment, counterclaim and abatement against GCC and GCC's successors and assigns with respect to the amounts due under this Finance Contract, and the Issuer's obligation to pay amounts due under this Finance Contract is absolute and unconditional and not subject to set-off, recoupment, counterclaim or abatement for any reason whatsoever.

3. SECTION DELETED.

4. Taxes. The Issuer agrees to directly pay all taxes, insurance and other costs of every nature associated with its ownership of the Property.

5. The Issuer's Covenants and Representations. The Issuer covenants and represents as follows:

(a) The Issuer has full power and authority to enter into this Finance Contract which has been duly authorized, executed, and delivered by the Issuer and is a valid and binding obligation enforceable in accordance with its terms, and all requirements for execution, delivery and performance of this Finance Contract have been, or will be, complied with in a timely manner;

(b) All Payments hereunder for the current fiscal period have been duly authorized and will be paid when due;

(c) There are no pending or threatened lawsuits or administrative or other proceedings contesting the authority for, authorization of performance of, or expenditure of funds pursuant to this Finance Contract. Prior to each payment due date, the Issuer shall transfer funds to _____, the paying agent, an amount equal to the payment then due. The Issuer shall pay to _____ an annual paying agent fee of $300.

(d) The information supplied and statements made by the Issuer in any financial statement or current budget prior to or contemporaneously with this Finance Contract are true and correct;

(e) The Issuer has complied or will comply with all bidding/proposal laws applicable to this transaction and the purchase of the Property.

(f) No contract, rental agreement, lease-purchase agreement, payment agreement or contract for purchase under the Act to which the Issuer has been a party at any time during the past ten (10) years has been terminated by the Issuer as a result of insufficient funds being appropriated in any Fiscal Year. No event has occurred which would constitute an event of default under any debt, revenue bond or obligation which the Issuer has issued during the past ten (10) years.

(g) The Issuer will pay the Contract Payment Due by check, wire transfer, or ACH only.

6. Use and Licenses. The Issuer shall pay and discharge all operating and other expenses of every nature associated with its use of the Property. The Issuer shall obtain, at its expense, all registrations, permits and licenses, if any, required by law for the installation and operation of the Property.

7. Maintenance. The Issuer agrees to be solely responsible for all maintenance and operating costs of every nature associated with its ownership of the Property and the Issuer acknowledges that GCC or GCC's successors or assigns shall have no responsibility for the payment of any such costs.

8. Damage to or Destruction of Property. The Issuer shall bear the entire risk of loss, damage, theft, or destruction of the Property from any and every cause whatsoever, and no loss, damage, destruction, or other event shall release the Issuer from the obligation to pay the full amount of the payments or from any other obligation under this Finance Contract.

9. No Warranty. EXCEPT FOR REPRESENTATIONS, WARRANTIES, AND SERVICE AGREEMENTS RELATING TO THE PROPERTY MADE OR ENTERED INTO BY THE MANUFACTURERS OR SUPPLIERS OF THE PROPERTY, IF ANY, ALL OF WHICH ARE HEREBY ASSIGNED TO THE ISSUER, GCC HAS MADE AND MAKES NO REPRESENTATION OR WARRANTY, EXPRESS OR IMPLIED, AND ASSUMES NO OBLIGATION WITH RESPECT TO THE TITLE, MERCHANTABILITY, CONDITION, QUALITY OR FITNESS OF THE PROPERTY DESCRIBED IN EXHIBIT A FOR ANY PARTICULAR PURPOSE OR THE CONFORMITY OF THE PROPERTY TO SPECIFICATION OR PURCHASE ORDER. All such risks shall be borne by the Issuer without in any way excusing it from its obligations under this Finance Contract, and GCC shall not be liable for any damages on account of such risks. All claims or actions on any warranty so assigned shall be made or prosecuted by the Issuer, at its sole expense, upon prior written notice to GCC. GCC or its assigns may, but shall have no obligation whatsoever to, participate in a claim on any warranty. Any recovery under such a warranty shall be made payable jointly to both parties.

10. Evidence of Indebtedness and Security Agreement.

(a) An executed copy of this Finance Contract shall evidence the indebtedness of the Issuer as provided herein and shall constitute a security agreement pursuant to applicable law, with GCC, its successors or assigns as the secured party. The grants, lien, pledge and security interest of GCC, its successors or assigns created herein shall become effective immediately upon and from the Delivery Date, and the same shall be continuously effective for so long as any Finance Contract Payments are outstanding.

(b) A fully executed copy of this Finance Contract and the proceedings authorizing same shall be kept at all times and shall be filed and recorded as a security agreement among the permanent records of the Issuer. Such records shall be open for inspection to any member of the general public and to any individual, firm, corporation, governmental entity or other person proposing to do or doing business with, or having or asserting claims against the Issuer, at all times during regular business hours.

(c) If, in the opinion of counsel to the Issuer or to GCC, its successors or assigns, applicable law ever requires filings additional to the filing pursuant to subsection (b) of this section in order to preserve and protect the priority of the grants, assignments, lien, pledge and security interest of GCC, its successors or assigns created herein as to all Payments, then the Issuer shall diligently and regularly make such filings to the extent required by law to accomplish such result.

11. Default and Remedies.

(a) Each of the following occurrences or events for the purpose of this Finance Contract is hereby declared to be an Event of Default:

(1) the failure to make payment of the Payment when the same becomes due and payable; or

(2) default in the performance or observance of any other covenant agreement or obligation of the Issuer, which default materially, adversely affects the rights of GCC or its successors or assigns, including, but not limited to, its prospect or ability to be repaid in accordance with this Finance Contract, and the continuation thereof for a period of 20 days after notice of such default is given by GCC or any successors or assigns of GCC to the Issuer.

(b) Remedies for Default.

(1) Upon the happening of any Event of Default, then and in every case GCC or its successors or assigns, or an authorized representative thereof, including, but not limited to, an attorney or trustee therefore, may proceed against the Issuer for the purpose of protecting and enforcing the rights of GCC or its successors or assigns under this Finance Contract, by mandamus or other suit, action or special proceeding in equity or at law, in any court of competent jurisdiction, for any relief permitted by law, including the specific performance of any covenant or agreement contained herein, or thereby to enjoin any act or thing that may be unlawful or in violation of any right of GCC or its successors or assigns or any combination of such remedies; provided that none of such parties shall have any right to declare the balance of the Finance Contract Payments to be immediately due and payable as a remedy because of the occurrence of an Event of Default.

(2) The exercise of any remedy herein conferred or reserved shall not be deemed a waiver of any other available remedy, and no delay or omission to exercise any right or power occurring upon any Event of Default shall impair any such right or power or be construed to be a waiver thereof and all such rights and powers may be exercised as often as may be deemed expedient.

(c) Remedies Not Exclusive.

(1) No remedy herein conferred or reserved is intended to be exclusive of any other available remedy or remedies, but each and every such remedy shall be cumulative and shall be in addition to every other remedy given hereunder or under this Finance Contract or now or hereafter existing at law or in equity; provided, however, that notwithstanding any other provision of this Finance Contract, the right to accelerate the debt evidenced by this Finance Contract shall not be available as a remedy because of the occurrence of an Event of Default.

12. Assignment. Without GCC's prior written consent, the Issuer will not either ***(a)*** assign, transfer, pledge, hypothecate, grant any security interest in or otherwise dispose of this Finance Contract or the Property or any interest in this Finance Contract or the Property; or ***(b)*** sublet or lend the Property or permit it to be used by anyone other than the Issuer or the Issuer's employees and other authorized users. GCC may assign its rights, title and interest in and to this Finance Contract, and any other documents executed with respect to this Finance Contract and/or grant or assign a security interest in this Finance Contract, in whole or in part. Such successors and assigns of GCC shall have the right to further grant or assign a security interest in this Finance Contract, as well as the rights to Payments hereunder, in whole or in part, to any third party. No assignment or reassignment of GCC's rights, title or interest in this Finance Contract shall be effective with regard to the Issuer unless and until the Issuer shall have received a copy of the document by which the assignment or reassignment is made, disclosing the name and address of such assignee. The Issuer shall maintain written records of any assignments of the Finance Contract.

13. Personal Property. The Property is and shall at all times be and remain personal property, and will not be considered a fixture to any real property.

14. GCC's Right to Perform for The Issuer. If the Issuer fails to make any payment or perform or comply with any of its covenants or obligations hereunder, GCC or GCC's successors or assigns may, but shall not be required to, make such payment or perform or comply with such covenants and obligations on behalf of the Issuer, and the amount of any such payment and the expenses (including but not limited to reasonable attorneys' fees) incurred by GCC or GCC's successors or assigns in performing or complying with such covenants and obligations, as the case may be, together with interest thereon at the highest lawful rate under the State of Texas law, shall be payable by the Issuer upon demand.

15. Interest on Default. If the Issuer fails to pay any Payment specified herein within twenty (20) days after the due date thereof, the Issuer shall pay to GCC or any successor or assigns of GCC, interest on such delinquent payment at the highest rate allowed by Texas law.

16. Notices. Any notices to be given or to be served upon any party hereto in connection with this Finance Contract must be in writing and may be given by certified or registered mail, and shall be deemed to have been given and received forty-eight (48) hours after mailing. Such notice shall be given to the parties at their respective addresses designated on the signature page of this Finance Contract or at such other address as either party may hereafter designate.

17. Prepayment. As condition precedent to the Issuer's right to make, and GCC or any successor or assigns of GCC's obligation to accept, any such prepayment, GCC or any successor or assigns of GCC shall have actually received notice at least thirty (30) days in advance of the Issuer's intent to exercise its option to prepay.

THE ISSUER HEREBY AGREES that all fees and other prepaid finance charges are earned fully as of the date of the Contract and will not be subject to refund upon early payment (whether voluntary or as a result of default), except as otherwise required by law.

IN THE EVENT of any Unscheduled Principal Reduction, the Issuer shall be obligated to pay to GCC or any successor or assigns of GCC, in addition to the principal, interest, premium and all other costs and fees to which GCC or any successor or assigns of GCC is otherwise entitled, a Yield Maintenance Fee as compensation for GCC or any successor or assigns of GCC having agreed to calculate the interest due on the Contract at a fixed rate. In this regard, the following definitions shall apply:

"Yield Maintenance Fee" means the sum of the present value (discounted at Remaining Term Swap Rate defined below) of (i) the remaining scheduled interest payments to be paid on the Unscheduled Principal Reduction through end of the Current Fixed Period, less (ii) the interest payments which would be collected on a new loan of the same amount as the Unscheduled Principal Reduction through the end of the Current Fixed Period at the New Fixed Rate.

"Current Fixed Period" means the period of time during which the Issuer and GCC or any successor or assigns of GCC have agreed to calculate the interest due on the Contract at a fixed rate as of the date of any Unscheduled Principal Reduction.

"Current Fixed Rate" means the fixed rate of interest upon which the Contract interest payments are calculated as of the Business Day preceding any Unscheduled Principal Reduction.

"Fixing Date" means February 24, 2017.

"New Fixed Rate" means the rate equal to the sum of (i) the Remaining Term Swap Rate, plus (ii) the Original Spread.

"Original Spread" means the resulting difference when (i) Original Term Swap Rate is subtracted from (ii) the Current Fixed Rate.

"Original Term Swap Rate" means the International Swaps and Derivatives Association ("ISDA") mid-market par swap rate (or interpolated rate) as of the Fixing Date with a term matching the original term of the Current Fixed Period.

"Remaining Term Swap Rate" means ISDA's mid-market par swap rate (or interpolated rate) for the term matching the time remaining to the end of the Current Fixed Period on the Business Day preceding the Unscheduled Principal Reduction.

"Scheduled Principal Balance" means for any period(s) the outstanding principal balance that may be determined using the description of the funding and payment obligations of the Issuer contained herein.

"Unscheduled Principal Reduction" means any reduction, for any reason at any time, in the Scheduled Principal Balance of the Contract.

18. Continuing Disclosure. Specifically and without limitation, the Issuer agrees to provide audited financial statements to GCC or any successor or assigns of GCC, prepared by a certified public accountant not later than six (6) months after and as of the end of each fiscal year. Periodic financial statements shall include a combined balance sheet as of the end of each such period, and a combined statement of revenues, expenditures and changes in fund balances, from the beginning of the then fiscal year to the end of such period. These reports must be certified as correct by one of the Issuer's authorized agents. If the Issuer has subsidiaries, the financial statements required will be provided on a consolidated and consolidation basis.

19. Tax Exemption.

(a) Issuer acknowledges and agrees that the Payments have been calculated by GCC assuming that the interest portion of each Payment is exempt from Federal Income Taxation. Issuer represents, warrants and covenants that it will do or refrain from doing all things necessary or appropriate to insure that the interest portion of the Payments is exempt from Federal Income Taxation, including, but not limited to, executing and filing all information statements required by Section 149(e) of the Internal Revenue Code of 1986, as amended, and timely paying, to the extent of available funds, amounts required to be rebated to the United States pursuant to Section 148(f) of the Internal Revenue Code of 1986, as amended.

(b) The Issuer hereby represents and covenants that the proceeds of this Finance Contract are needed at this time to provide funds for the Issuer's purchase of the property for which this Finance Contract was executed and delivered, as specified in this Finance Contract; that (i) final disbursement of the proceeds of this Finance Contract will occur within three years from the Delivery Date, (ii) substantial binding obligations to expend at least five (5) percent of the net proceeds will be incurred within six months after the Delivery Date and (iii) the acquisition of such property will proceed with due diligence to completion; and that, except for the Escrow Agreement, if applicable, and the Payment Fund, no other funds or accounts have been or will be established or pledged to the payment of this Finance Contract.

(c) The Issuer will not directly or indirectly take any action or omit to take any action, which action or omission would cause the Finance Contract to constitute a "*private activity bond*" within the meaning of Section 141(a) of the Code.

(d) The Issuer will not take any action or fail to take any action with respect to the investment of the proceeds of this Finance Contract or any other funds of the Issuer, including amounts received from the investment of any of the foregoing, that would cause this Finance Contract to be an "*arbitrage bond*" within the meaning of such section 148 of the Code.

(e) There are no other obligations of the Issuer which are sold at substantially the same time as the Finance Contract, sold pursuant to the same plan of financing with the Finance Contract and are reasonably expected to be paid from substantially the same source of funds as the Finance Contract.

(f) The Issuer will not take any action, or as the case may be, knowingly omit to take any action within its control that, if taken or omitted, as the case may be, would cause the Finance Contract to be treated as "*federally guaranteed*" obligations for purposes of Section 149(b) of the Code.

(g) The Issuer will take all necessary steps to comply with the requirement that certain amounts earned by the Issuer on the investment of the "*gross proceeds*" of the Finance Contract (within the meaning of Section 148(f)(6)(B) of the Code), if any, be rebated to the federal government. Specifically, the Issuer will (i) maintain records regarding the investment of the gross proceeds of the Finance Contract as may be required to calculate and substantiate the amount earned on the investment of the gross proceeds of the Finance Contract and retain such records for at least six years after the day on which the last outstanding Finance Contract is discharged, (ii) account for all gross proceeds under a reasonable, consistently applied method of accounting, including any specified method of accounting required by applicable regulations to be used for all or a portion of the gross proceeds,

(iii) calculate, at such times as are required by applicable regulations, the amount earned from the investment of the gross proceeds of the Finance Contract and (iv) timely pay all amounts required to be rebated to the federal government. In addition, the Issuer will correct any errors within a reasonable amount of time thereafter, including payment to the federal government of any delinquent amounts owed to it, including interest thereon and penalty, if any, as may be necessary or appropriate to assure that interest on the Finance Contract is not includable in the gross income for federal income tax purposes.

(h) The Issuer will timely file with the Secretary of the Treasury of the United States the information required by Section 149(e) of the Code with respect to the Finance Contract on such form and in such place as the Secretary may prescribe. Notwithstanding any other provision of this Finance Contract, the Issuer's obligation under the covenants and provisions of this Section 19 shall survive the defeasance and discharge of this Finance Contract.

20. Miscellaneous.

(a) Time is of the essence. No covenant or obligations hereunder to be performed by the Issuer are waived, except by the written consent of GCC or its successors or assigns. GCC's or its successors or assigns' rights hereunder are cumulative and not alternative.

(b) This Finance Contract shall be construed in accordance with, and governed by the state of Texas laws.

(c) This Finance Contract constitutes the entire agreement between the parties and shall not be modified, waived, discharged, terminated, amended, altered or changed in any respect except by a written document signed by both GCC and the Issuer.

(d) Any term or provision of this Finance Contract found to be prohibited by law or unenforceable shall not affect the legality the remainder of this Finance Contract.

(e) Use of the neuter gender herein is for purposes of convenience only and shall be deemed to mean and include the masculine or feminine gender whenever appropriate.

(f) The captions set forth herein are for convenience of reference only, and shall not define or limit any of the terms or provisions hereof.

(g) Issuer agrees to equitably adjust the payments payable under this Finance Contract if there is a determination by the IRS that the interest payable pursuant to this Finance Contract (as incorporated within the schedule of payments) is not excludable from income in accordance with the Internal Revenue Code of 1986, as amended, such as to make GCC and its assigns whole.

(h) Except as otherwise provided, this Finance Contract shall be binding upon and inure to the benefit of the Parties hereto and their respective heirs, executors, administrators, legal representatives, successors and assigns, where permitted by this Finance Contract.

(i) THIS CONTRACT IS EVIDENCE OF A PRIVATELY PLACED BANK LOAN, IS NOT IN REGISTERED FORM, AND MAY NOT BE TRANSFERRED TO BEARER. TRANSFERS OF THIS CONTRACT ARE NOT REGISTERED ON BOOKS MAINTAINED FOR THAT PURPOSE BY THE ISSUER.

[Signature page follows]

IN WITNESS WHEREOF, the parties have executed this Finance Contract as of the 24th day of February, in the year 2017.

Government Capital Corporation

_____
Authorized Signature
345 Miron Dr.
Southlake, TX 76092

Witness Signature_____

Print Name _____

Print Title _____

The Issuer: Hays County

_____
County Judge
111 E. San Antonio St.
San Marcos, TX 78666

_____
County Clerk

EXHIBIT A

Public Property Finance Act Contract No.7669 (THE "FINANCE CONTRACT")
By And Between
Government Capital Corporation and ***the Issuer,*** Hays County
Dated as of February 24, 2017

DESCRIPTION

Personal Property	Property Cost: $3,796,679.00	Payback Period: Sixteen (16) Annual Payments

Personal Property for a County-wide Energy Efficiency Project, to include:

- **Led Lighting and Controls**
- **Power Conditioning**
- **Solar Photovoltaics**
- **Retro-Commissioning and Building Automation Systems**
- **Water Controls**

PROPERTY LOCATION:
County-wide
Hays County, TX

EXHIBIT B

>> SCHEDULE OF PAYMENTS & EARLY REDEMPTION VALUE <<

PUBLIC PROPERTY FINANCE ACT CONTRACT NO.7669 (THE "FINANCE CONTRACT")

BY AND BETWEEN

Government Capital Corporation and the **Issuer,** Hays County

Schedule Dated as of February 24, 2017

Dates	Principal Amount	Interest	Net Total Debt Service	Net Fiscal Year Debt Service
12/15/2017	$0.00	$80,250.61	$80,250.61	$80,250.61
12/15/2018	$305,219.00	$99,279.10	$404,498.10	$404,498.10
12/15/2019	$312,834.00	$91,434.97	$404,268.97	$404,268.97
12/15/2020	$320,498.00	$83,395.14	$403,893.14	$403,893.14
12/15/2021	$328,351.00	$75,158.34	$403,509.34	$403,509.34
12/15/2022	$208,496.00	$66,719.72	$275,215.72	$275,215.72
12/15/2023	$213,604.00	$61,361.37	$274,965.37	$274,965.37
12/15/2024	$218,837.00	$55,871.75	$274,708.75	$274,708.75
12/15/2025	$224,199.00	$50,247.64	$274,446.64	$274,446.64
12/15/2026	$229,691.00	$44,485.72	$274,176.72	$274,176.72
12/15/2027	$235,319.00	$38,582.66	$273,901.66	$273,901.66
12/15/2028	$241,084.00	$32,534.97	$273,618.97	$273,618.97
12/15/2029	$246,991.00	$26,339.11	$273,330.11	$273,330.11
12/15/2030	$253,042.00	$19,991.44	$273,033.44	$273,033.44
12/15/2031	$259,242.00	$13,488.26	$272,730.26	$272,730.26
12/15/2032	$265,593.00	$6,825.74	$272,418.74	$272,418.74
Total	**$3,863,000.00**	**$845,966.54**	**$4,708,966.54**	**$4,708,966.54**

Interest Rate: 2.57%

INCUMBENCY CERTIFICATE

Public Property Finance Act Contract No.7669 (THE "FINANCE CONTRACT")
By And Between
Government Capital Corporation and ***the Issuer,*** Hays County
Dated as of February 24, 2017

I, Liz Gonzales, do hereby certify that I am the duly elected or appointed and acting County Clerk, of Hays County, Issuer, a political subdivision or agency of the State of Texas, duly organized and existing under the laws of the State of Texas, that I or my designee have custody of the records of such entity, and that, as of the date hereof, the individual(s) named below are the duly elected or appointed officer(s) of such entity holding the office(s) set forth opposite their respective name(s). I further certify that (i) the signature(s) set opposite their respective name(s) and title(s) are their true and authentic signature(s), and (ii) such officers have the authority on behalf of such entity to enter into that certain Public Property Finance Act Contract No.7669, between Hays County (the "Issuer") and Government Capital Corporation ("GCC").

Name	Title	Signature
Bert Cobb, M.D.	County Judge	_____

IN WITNESS WHEREOF, I have duly executed this certificate hereto this _____ day of _____, 2017.

By: _____
Liz Gonzales, County Clerk

TAX AND ARBITRAGE CERTIFICATE

Public Property Finance Act Contract No.7669 (THE "FINANCE CONTRACT")
BY AND BETWEEN
Government Capital Corporation and **Issuer,** Hays County
Dated as of February 24, 2017

This **Tax and Arbitrage Certificate** is executed on this ____ day of _____, 2017 by the undersigned ("Issuer") and pertains to that financing agreement dated February 24, 2017, as is more fully described above (the "Financing Contract"). This Certificate is being issued pursuant to Section 148 of the Internal Revenue Code of 1986, as amended (the "Code") and Treasury Regulation Sections 1.141-1 through 1.141-15, 1.148-0 through 1.148-11, 1.149(d), 1.149(g)-1, 1.150-1 and 1.150-2 (the "Regulations"). The Issuer hereby agrees that: (a) proceeds derived from the issuance of the Finance Contract shall only be used to acquire property that has a governmental purpose and will not be used to acquire property that will benefit any private business activity; (b) proceeds derived from the issuance of the Finance Contract shall never be invested in instruments yielding an interest rate return in excess of the rate of interest set forth in the Finance Contract; (c) proceeds derived from the issuance of the Finance Contract shall be fully and completely expended for their anticipated purpose within at least one year from the date of the Finance Contract; (d) proceeds derived from the issuance of the Finance Contract shall not be used to finance any acquisition other than the purchase of that property identified in the Finance Contract along with related costs and costs of issuance; (e) the repayment of the Finance Contract is not guaranteed directly or indirectly by the federal government; (f) Issuer shall execute a Form 8038-G and allow for such to be filed of record with the Internal Revenue Service; (g) the Finance Contract is in registered form and that the Issuer shall maintain a record regarding the ownership of the Finance Contract and the payment of all sums payable under the Finance Contract; (h) the proceeds derived from the issuance of the Finance Contract are not in excess of the sums required in order to acquire the property that is the subject of the Finance Contract and to fund the costs associated with the issuance of the Finance Contract; (i) Issuer does not currently contemplate the sale or disposition of the property that is the subject of the Finance Contract prior to the expiration of the Finance Contract's payment terms; and (j) the Issuer shall otherwise abide by all applicable rules and regulations related to the issuance of the Finance Contract.

To the best of the knowledge and belief of the undersigned, the expectations as set forth above, are reasonable; and there are no present facts, estimates, and circumstances which would change the foregoing expectations. The Issuer has not been notified of the listing, or proposed listing of it, by the Internal Revenue Service as an Issuer whose arbitrage certificates may not be relied upon.

Executed on the date first referenced above.

Issuer: Hays County

_____
County Judge
111 E. San Antonio St.
San Marcos, TX 78666

345 MIRON DRIVE SOUTHLAKE, TEXAS 76092 817 421 5400
WWW.GOVCAP.COM

As you may be aware, during the 84th Regular Legislative Session, the Texas Legislature passed House Bill 1295 ("HB1295") which creates a new reporting process effective for governmental contracts executed on and after January 1, 2017. Pursuant to the rules promulgated by the Texas Ethics Commission ("TEC"), GCC is required to submit the enclosed "Certificate of Interest Parties" form (Form 1295). This form has been signed and notarized by GCC and as required under the rules, has also been filed electronically with the TEC.

Under the TEC's rules, you are required to acknowledge receipt of this Form 1295 on the TEC's website (https://www.ethics.state.tx.us/whatsnew/elf_info_form1295.htm). At this web site, you will find further background on HB1295 and your reporting responsibilities, including instructions on how to log in to the TEC's web portal, frequently asked questions and on-line tutorials. We encourage you to log on and acknowledge receipt of the attached form at your earliest convenience. Pursuant to the TEC's rules, you are required to file the electronic acknowledgment within 30 days after the date of the financing contract.

Should you have further questions about HB1295, we encourage you to contact a representative at GCC or your legal counsel.

GENERAL CERTIFICATE

THE STATE OF TEXAS §
§
COUNTY OF HAYS §

I, the undersigned, County Judge of Hays County, Texas (the "*County*"), **DO HEREBY CERTIFY** as follows:

1. The County is a duly created and existing county of the State of Texas operating under the Constitution and laws of the State of Texas.

2. The duly qualified and acting officers of the County are as follows:

Bert Cobb, M.D.	County Judge
Debbie Ingalsbe	Commissioner, Precinct 1
Mark Jones	Commissioner, Precinct 2
Will Conley	Commissioner, Precinct 3
Ray Whisenant	Commissioner, Precinct 4

3. The Finance Contract has been duly and officially executed by the undersigned with their manual or facsimile signature in the same manner appearing hereon, and the undersigned hereby adopt and ratify their respective signatures in the manner appearing on the Finance Contract whether in manual or facsimile form, as the case may be, as their true, genuine and official signatures.

4. On the date of the execution of the Finance Contract and on the date hereof, we were and are the duly qualified and acting officials of the County indicated below.

5. The legally adopted proper and official corporate seal of the County is impressed, imprinted or lithographed on the Finance Contract and impressed on this Certificate.

6. No litigation of any nature is now pending before any federal or state court, or administrative body, or to our knowledge threatened, to which the County is a party that seeks to restrain or enjoin the issuance or delivery of the Finance Contract or questioning the issuance or private placement of the Finance Contract, or the authority or action of the governing body of the County relating to the issuance or private placement of the Finance Contract, or the levy of ad valorem taxes by the County or materially affecting the assessment or collection of ad valorem taxes by the County; and that neither the corporate existence or boundaries of the County nor the right to hold office of any member of the governing body of the County or any other elected or appointed official of the County is being contested or otherwise questioned.

7. No authority or proceeding for the issuance, sale or delivery of the Finance Contract, passed and adopted by the governing body of the County, has been amended, repealed, revoked, rescinded or otherwise modified since the date of passage thereof, and all such proceedings and authority relating to the issuance and sale of the Finance Contract remain in full force and effect as of the date of this Certificate.

WITNESS OUR HANDS AND THE SEAL OF THE COUNTY, this the __th of February, 2017.

HAYS COUNTY, TEXAS

By:_____
County Judge

(COUNTY SEAL)

ATTEST:

By: _____
County Clerk, Hays County, Texas

AGENDA ITEM REQUEST FORM

Hays County Commissioners Court

Tuesdays at 9:00 AM

Request forms are due in Microsoft Word Format via email by 2:00 p.m. on Wednesday.

AGENDA ITEM

Discussion and possible action to approve payment without issuance of a purchase order for supplies purchased for the County Clerk's office.

ITEM TYPE	MEETING DATE	AMOUNT REQUIRED
ACTION-MISCELLANEOUS	February 21, 2017	$551.59

LINE ITEM NUMBER

001-617-00.5211 OFFICE SUPPLIES

AUDITOR USE ONLY

AUDITOR COMMENTS:

PURCHASING GUIDELINES FOLLOWED: NO **AUDITOR REVIEW:** MARISOL VILLARREAL-ALONZO

REQUESTED BY	SPONSOR	CO-SPONSOR
Gonzalez	COBB	N/A

SUMMARY

The County's Purchasing Policy states that a single invoice totaling $500 or more requires a purchase order and must be issued prior to making the purchase or securing the services. In order to process the invoice for payment, Commissioners' Court approval must be obtained.
The County Clerk's office has a new person that is handling all purchases and wasn't aware of the County Purchasing Policy. County Clerk respectfully asks for the Court's consideration.

ENGINEERING™
innovation

3601 Sagamore Pkwy N • Suite Eii
Lafayette • IN • 47904
Accounting 765-250-4109

Invoice

Sales Order No.	Account ID	Date	Invoice #
00096548	2878	1/16/2017	13554

Bill To

Hays County
712 S Stagecoach Tr Ste 2008
San Marcos, TX 78666

Ship To

Hays County
712 S Stagecoach Tr Ste 2008
San Marcos, TX 78666

Customer Contact	Liz Gonzalez

P.O. Number	Due Date	Terms	Ship	Via	Tracking #	F.O.B.
Linda Duran CDI Online Pu	2/15/2017	Net 30	1/16/2017	UPS Ground	1ZX3745W0345924166	EII

Item Code	Quantity	U/M	Description	Price Each	Amount
1008568-01	5	ea	ParcelPak Bundle (Box of 100) - 9 x 12 Plus Transactions	105.00	525.00
1002141-01	1	ea	Shipping and Handling	26.59	26.59

Total	$551.59
Payments/Credits	$0.00
Balance Due	**$551.59**

For credit card payments, there is a 3% convenience fee.

Finance charge of 1.5% per month will be charged on past due accounts.

AGENDA ITEM REQUEST FORM

Hays County Commissioners Court

Tuesdays at 9:00 AM

Request forms are due in Microsoft Word Format via email by 2:00 p.m. on Wednesday.

AGENDA ITEM

Hold a public hearing to discuss and finalize changes to the Hays County Development Regulations; discussion with staff regarding proposed changes to the Hays County Development Regulations. Possible action may follow in court.

ITEM TYPE	MEETING DATE	AMOUNT REQUIRED
ACTION-MISCELLANEOUS	February 21, 2017	

LINE ITEM NUMBER

AUDITOR USE ONLY

AUDITOR COMMENTS:

PURCHASING GUIDELINES FOLLOWED: N/A **AUDITOR REVIEW:** N/A

REQUESTED BY	SPONSOR	CO-SPONSOR
Caitlyn Hairell	COBB	N/A

SUMMARY

Amendments to the Hays County Development Regulations are being proposed. Documentation and justification for the proposed changes are provided in backup.

If additional changes to the regulations are requested, they will be heard and codified at the public hearing.

~~(E)~~(F) Condominium Development - a form of real property with portions of the real property designated for separate ownership or occupancy, and the remainder of the real property designated for common ownership or occupancy solely by the owners of those portions. For the purposes of these regulations a Condominium shall be all developments created under Chapter 82 of the Texas Property Code aka the Uniform Condominium Act.

Comment [RM1]: New definition clarifies what constitutes a condominium development.

~~(F)~~(G) Conservation Easement – an easement on real property for the purpose of limiting or restricting development activities on the property subject to said easement. To qualify as a Conservation Easement under this Chapter, the easement shall be granted to the public and shall be held by the County or other non-profit legal entity recognized by the County as custodian for the County. A Conservation Easement shall be in such form and under such conditions as are acceptable to the County.

~~(G)~~(H) Contiguous Property(ies) - land parcels, tracts or lots of real property that are immediately adjacent, connected to one another or share a common boundary, but may also includes land separated only by a roadway, utility corridor or aquatic feature. Properties that are separated by a roadway, utility corridor or aquatic feature within two hundred feet are considered Contiguous Properties.

~~(H)~~(I) Contributing Zone of the Edwards Aquifer - The area or watershed where runoff from precipitation flows downgradient to the recharge zone of the Edwards Aquifer and is generally located upstream (upgradient) and north to northwest of the recharge zone, as identified by the Texas Commission on Environmental Quality (TCEQ) under the Edwards Aquifer Rules. It is the intent of the County that this definition conform to the corresponding definition included in the TCEQ Edwards Aquifer Program regulations, as subsequently amended. In the event an Applicant cannot determine with specificity the location of the boundary of the Contributing Zone of the Edwards Aquifer, the Applicant may submit appropriate maps and other evidence as may be requested by the Department for assistance in such determination from the Department.

~~(I)~~(J) County - Hays County, Texas. Where referenced herein, the County may include either the Commissioners Court or personnel, departments or agencies of the County acting under authority delegated to such personnel, departments or agencies by the Commissioners Court.

~~(J)~~(K) County Clerk - The County Clerk of Hays County.

~~(K)~~(L) Department – Either the Hays County Transportation Department or Hays County Development Services Department, as applicable.

~~(L)~~(M) Development - All land modification activity, including the construction of buildings, roadways, paved storage areas, parking lots, storm water management facilities and other impervious structures or surfaces.

~~(M)~~(N) Development Agreement – A written agreement entered into between the County, the Permittee and/or the Owner(s) of the Subject Property that stipulates the conditions under which development activities on the Subject Property will be conducted. Development Agreements must have the approval of the Hays County Commissioners Court.

~~(N)~~(O) Development Authorization – The approval by the Hays County Commissioners Court or by departments, agents, or personnel delegated such approval authority by the Commissioners Court of one or more Applications for development activities governed

DRAFT

(2) New roadways dedicated to the public through any action of the County;

(3) New roadways dedicated to the public to be maintained by the County including roadways constructed as a part of a subdivision, Manufactured Home Rental Community or other type of Development Authorization approved under these Regulations; and,

(4) Existing ~~P~~private roadways ~~, shared access easements, and shared access driveways~~ not dedicated to the public and not maintained by the County, but used for emergency services access ~~or~~ and general egress/ingress by the public as a part of any Development Authorization issued under these Regulations.

Comment [RM2]: Language modified to clarify the definition of an existing private roadway

~~(OO)~~(PP) Regulations - The Hays County Development Regulations, inclusive of Chapters 701 through 799.

~~(PP)~~(QQ) Reviewing Authority – An authorized municipality, Hays County, or a joint office established by one or more authorized municipalities and Hays County for the purpose of conducting reviews and issuing approvals for development activities.

(RR) ~~-~~Shared Access Driveway – point of access for new subdivision resulting in no more than 5 lots, typically an easement, not dedicated to the public and not maintained by the County, but used for emergency services access and general egress/ingress by the public as a part of any Development Authorization issued under these Regulations.

Comment [RM3]: Defines the parameters of a shared access driveway, as described in Chapter 721.

~~(QQ)~~(SS) Single Family Residence - Any habitable structure constructed on, or brought to, its site and occupied by members of a family, including but not limited to manufactured homes situated on leased space.

~~(RR)~~(TT) Subdivision - The division of a tract of land situated within Hays County and outside the corporate limits of any municipality into two or more lots to lay out or identify: (i) a subdivision of the tract, including an addition; (ii) lots; (iii) roadways, alleys, squares, parks, or other parts of the tract intended to be dedicated to public use or for the use of purchasers or owners of lots fronting on or adjacent to the roadways, alleys, squares, parks, or other parts; or (iv) division of the property for the purposes of establishing a security interest or a financial severance. It is the intent of the Commissioners Court of Hays County that the term "subdivision" be interpreted to include all divisions of the land to the fullest extent permitted under the laws of the State of Texas.

(1) A division of a tract under this subsection includes a division regardless of whether it is made by using a metes and bounds description in a deed of conveyance, in a contract for deed or other executory contract to convey, in a lease (other than agricultural and hunting leases), or by using any other method of a conveyance of an interest in land.

(2) A division of land shall be considered as relating to the laying out of streets, whether public or private, if:

The division occurs prior to the later to occur of: two (2) years from the date of the completion of construction of any roadway onto which the Lot has frontage or, in the case of public roadways, the expiration of the performance or maintenance bond for any such roadway;

The division of land creates one or more Lots without practical, physical vehicular access onto a Regulated Roadway or with less than fifty feet (50') of direct

DRAFT

(9) Transfers of existing Development Authorizations that fall into one of the following categories:

(a) Transfers involving only the elimination of one or more of multiple original Permittees, provided at least one of the original Permittees continues to holds the transferred Development Authorization.

(b) Transfers of existing Development Authorizations to legal successors recognized under law in the event of death, incapacitation, or insolvency of an original Permittee, provided that the Applicant for the transfer submits appropriate documentation that is reviewed and determined to be valid by the Hays County Criminal District Attorney's office, or such other authorized legal representative as may designated by the Commissioners Court. Transfers resulting from a sale do not qualify for consideration as an administrative authorization, even if preceded by an otherwise qualifying event.

(B) The Department shall provide notice to the County Commissioners of all administrative approvals granted:

(1) The Department shall notify the Commissioner(s) in whose precinct(s) the Subject Property is located of the issuance of an administrative Development Authorization by forwarding a copy of the Development Authorization to the Commissioner(s) at the same time it is forwarded to the Applicant.

~~(2) The Department shall forward a written report to Commissioners Court identifying all administrative approvals issued during a particular calendar month. This report shall be forwarded for inclusion on the Commissioners Court agenda not later than the tenth working day following the end of the subject month.~~

Comment [CH4]: Deleted

§8.02. Criteria for Variance

The Commissioners Court shall have the authority to grant variances from these Regulations when the public interest or the requirements of justice demands relaxation of the strict requirements of the Rules, or to avoid a regulatory taking. Factors to be considered in evaluating a request for variance shall include:

(A) The actual situation of the property in question in relation to neighboring or similar properties, such that no special privilege not enjoyed by other similarly situated properties may be granted;

(B) Whether strict enforcement of the Regulations would deny the Applicant the privileges or safety of similarly situated property with similarly timed development;

(C) That the granting of the variance will not be detrimental to the public health, safety and welfare, or injurious to other property or will not prevent the orderly development of the land in the area in accordance with these Regulations;

(D) Whether there are special circumstances or conditions affecting the land or proposed development involved such that strict application of the provisions of these Regulations would deprive the applicant the reasonable use of his land and that failure to approve the variance would result in undue hardship to the applicant and/or a regulatory taking; and,

(E) Pecuniary hardship standing alone shall not be deemed to constitute undue hardship.

DRAFT

(7) Scenic and historic preservation buffer sizing requirements may be reduced by up to 40% and/or the maximum percentage of conservation space that may be comprised of scenic and historic preservation may be increased to a maximum of ten percent (10%) of the conservation space requirement; or,

(8) The Department may accept a conservation space as having met the requirement for preservation of significant and/or meaningful features or areas identified in the ecological assessment if it finds it is in substantial compliance with the requirement and it fulfills the purpose and intent of this ordinance.

(F) Variances for minimum lot size, when there is no net increase of density, as follows:

(1) Consolidation of lots ; or,
(2) Relocation of lot lines

Comment [CH5]: Language added to improve administrative variance approval. It will allow Development Services to approve amended plats that do not meet minimum lot size requirements, but do not increase density.

§8.06. Criteria for Administrative Variances

In addition to the criteria identified in §701.08.02, the Department shall make the following determination prior to granting any administrative variance authorized under §701.08.05:

(A) The variance will improve the functionality of the development on the property;

(B) The variance will improve the viability or sustainability of the conservation space for the purposes for which it is set aside; or,

(C) The variance will resolve a conflict between the provisions of this ordinance and other governmental requirements.

§8.07. Referral of Administrative Variances to Commissioners Court

The Department may, upon determining that a proposed administrative variance does not or may not meet the criteria identified in §701.08.06, defer the approval of such proposed administrative variance to the Commissioners Court.

§8.08. Appeal of Variance Decision by the Department

Any Applicant for a variance who disagrees with a decision of the Department regarding the variance may appeal the decision to the Commissioners Court. Any such appeal shall be filed with the County Clerk and with the office of the County Judge within ten days from the date a written decision is issued by the Department on the variance request.

Sub-Chapter 9 - General Public Notice Requirements

§9.01. Communication with Precinct Commissioner

Where individual Chapters of these Regulations require communication or contact with the Precinct Commissioner, the Applicant or the Applicant's authorized agent is required to contact the Commissioner(s) in whose precinct(s) the proposed development is located prior to the submission of the Application. This contact or communication shall consist of either written communication or a personal visit by the Applicant or the Applicant's authorized agent. The Commissioner shall establish and make available to the public a copy of contact procedures for this purpose. Commissioners may delegate contact and communication responsibilities to one or more members of their staff. If the Commissioner requests a personal visit in response to receiving written communication, the Applicant or the Applicant's authorized agent shall arrange

DRAFT

CHAPTER 705 - SUBDIVISION AND PLATTING OF PROPERTY

Sub-Chapter 1 - Applicability

§1.01. General Requirements

This Chapter shall govern activities associated with the subdivision of property within the County, including construction of infrastructure and utilities, the construction and dedication of features to the County for maintenance and operation, and documenting and recording the requirements for these activities based on the approval of the County.

§1.02. Legal Authority

Legal Authority for adopting and enforcing the regulations in this Chapter is granted to the County under Texas Local Government Code (TLGC) in Chapters 232, 233, 234, 242 and 352 and under the Texas Water Code in Chapters 26 and 35.

§1.03. Approval Required Prior to Construction

Approval of the Commissioners Court is required prior to the construction and development of a subdivision, unless excluded or exempted under State law or as exempted below.

§1.04. Approval Required Prior to Furnishing Utility Service

A utility may not provide utility services, including water, sewer, gas, and electric services to a subdivision development until the Final Plat has been approved by the Commissioners Court. Prior to furnishing utility service, the prospective utility provider shall apply for a certification from the Department stating that the Final Plat has been reviewed and approved by the Commissioners Court.

Sub-Chapter 2 - General Subdivision Requirements

§2.01. General Requirements

Any person who subdivides a tract of land or creates a condominium style development shall:

(A) Comply in all respects with these Regulations; and,

(B) Prepare and submit to the Commissioners Court an Application for approval or registration of the proposed Subdivision in accordance with the terms and procedures set forth in this Chapter.

~~(B)~~(C) Comply in all respects with Hays County's Specifications for Roadway Design, Paving, and Drainage Improvements.

Comment [CH6]: Language added to clarify that condominium style developments ("Condo Regimes") require platting.

Comment [CH7]: Ensures that divisions of land meet roadway standards.

§2.02. Subdivision Approval Process

No Subdivision shall be approved until the Applicant has satisfied each of the following steps in the order indicated:

(A) Approval of Preliminary Plan by the Commissioners Court;

(B) Approval of Final Plat by the Commissioners Court; and,

(C) Filing of Record Plat with the County Clerk, to be recorded with the County Clerk in the Official County Records.

DRAFT

Sub-Chapter 3 - Exemptions

§3.01. Exempted Subdivisions

The following subdivisions of property are exempted from the subdivision and platting requirements, except for the requirement to register the subdivision, as outlined below:

(A) Exemptions allowed as defined by Texas Local Government Code §232.0015.

(B) Subdivisions made for the purpose of financial severance to establish a security interest in any portion less than the entirety of the property, which, if the security interest were exercised would sever the property into separate ownership.

~~(B)~~(C) Subdivisions resulting in three or fewer parcels utilizing a single access easement, where all resulting parcels utilizing an access easement are 10.00 acres or larger. No more than three parcels without direct frontage to a regulated roadway may be exempted from a single parent tract. Single access easement for exempt subdivision shall be required to be at least sixty (60) feet wide. Flag lots may not be utilized to create access.

Exempted subdivisions registered with the County must provide direct access to a regulated roadway, effective DATE. This requirement to provide direct access shall not be construed to require formal subdivision where TLGC §232.0015 does not require formal subdivision. Further subdivisions of platted lots do not qualify for exemptions under this sub-chapter.

§3.02. Registration

(A) All exempt subdivisions shall register the division with the County Clerk and submit the following to the Department:

(1) A duplicate copy of the recorded conveyance instrument, with legible metes and bounds description attached thereto;

(2) An executed registration Application in the form promulgated by the Department which shall require the Owner to acknowledge that all Lots remain subject to the other development regulations of the County; and,

(3) An affidavit stating that the owner/subdivider of the land acknowledges that any change in the exemption status will require the property to be formally subdivided under this Chapter.

(B) In addition to the items required by (A), above, a person whose subdivision is exempt from the subdivision and platting requirements of these Regulations under the Texas Local Government Code §232.0015 shall comply with the following additional requirements:

(1) The person shall file with the County Clerk and submit to the Department a survey or sketch (which may be on tax parcel maps or other form approved by the Department) showing the boundaries of the Lots, adjacent roads and adjacent property owners; and,

(2) The person shall submit to the Department an affidavit stating that the person will provide a copy of the affidavit required under 705.3.02(A)(3) to all persons to whom they transfer a subsequent interest in any portion of the subdivided property, whether through gift, sale or other means of transfer.

Comment [RM8]: Currently, there are no written guidelines for subdividing property off of an easement. This addition will provide a greater level of clarity both for staff as well as property owners and will not leave the issue up to interpretation.

Comment [CH9]: This language is added so, should the current or future property owner decide to develop the property further, they will have enough ROW to develop.

Comment [CH10]: Modified due to the fact that the definition of a regulated roadway is proposed to be changed in this revision.

DRAFT

(C) The size and location of the Original Tract or, if a reference identifier has previously been assigned, the reference identifier of the Subdivision application;

(D) A detailed description of the specific activities proposed for the Subject Property; and,

(E) Any technical representatives or consultants responsible for preparation of the Application or Supplemental Information (e.g. professional engineers, professional geoscientists, professional land surveyors, registered sanitarians, attorneys, accountants, etc.).

~~(E)~~(F) A PDF, to scale, of the initial plat submittal.

Comment [CH11]: A PDF of the plat will be required at the time of application. This will help the Department go paperless.

§4.04. Communication with Precinct Commissioner

The Applicant or the Applicant's authorized agent may be required to contact the Commissioner(s) in whose precinct(s) the proposed Subdivision is located prior to the submission of the Application.

§4.05. Supplemental Information

In addition to the items required to be submitted with the Application in accordance with Chapter 701 and Section §705.4.03, each Application for a Preliminary Plan or a Final Plat shall include the following:

(A) A copy of the deed or deeds documenting current ownership of the Subject Property;

(B) Engineering, Surveying and other drawings and documents containing the specific information required for either a Preliminary Plan or a Final Plat which can be found in sub-chapters 6, 7 and 8 of this chapter;

(C) All other documents or reports required pursuant to these Regulations and any associated bonds or letters of credit; and,

(D) Any Subdivision proposal that is not exempt according to Chapter 705, Subchapter 3 shall be required to submit digital files for all drawings and graphics of the Subdivision, as required under Chapter 701, Subchapter 7.

§4.06. Application Review Periods

The Department review period for an application for a Preliminary Plan or Final Plat shall begin on the first working day after a completed Application is submitted and shall end on the first Wednesday following the expiration of fifteen (15) working days thereafter.

(A) An application for a Preliminary Plan or Final Plat shall be deemed to be administratively complete for purposes of this Chapter when all of the materials required by these Regulations are delivered to the Department together with:

(1) For Preliminary Plans, those items required in Subchapters 5 and 6 of this Chapter, and;

(2) For Final Plats, those items required in Subchapters 5 and 8 of this Chapter.

(B) Final action, including resolution of all appeals, of either a Preliminary Plan or Final Plat shall be no later than sixty (60) calendar days from the date of the administratively complete application submittal, subject to extensions as allowed by TLGC §232.0025(f).

DRAFT

clearly state the number of acres within the Lot that lies within each Political Subdivision.

(N) Roadway geometric design parameters depicted on plats shall comply with the standards set forth in Table 721.02

~~(M)~~(O) Roadway and drainage improvements shall comply in all respects with Hays County's Specifictions for Roadway Design, Paving, and Drainage Improvements

Comment [CH12]: This will enable developers to find Roadway geometric design parameters with greater ease. They will be able to find the referenced item faster.

Comment [CH13]: This will require that developers will follow standards that we have set forth as a County.

§5.02. Water, Wastewater and Utilities Information

A proposed Subdivision shall satisfy the requirements of Chapter 715 of these Regulations and shall make provision for serving the Subdivision with other utilities:

(A) Designation of the entity supplying electric, telephone and natural gas utilities to the development, or a statement that such utility is not available;

(B) The location of all proposed utility easements and/or infrastructure, including water well sanitary easements, if applicable;

(C) A Water and Wastewater Service Plan, if required by Chapter 715;

(D) Certification that all Lots have been designed in compliance with the Hays County On-Site Sewage Facilities rules, together with all planning and evaluation materials required to determine Lot sizing under the Hays County On-Site Sewage Facilities rules and any request for a variance under the Hays County On-Site Sewage Facilities rules; and,

(E) Any applicable separation distances from identified streams or other applicable off-site receptors in accordance with the Hays County On-Site Sewage Facilities rules.

~~(E)~~(F) Unless specifically allowed in a Development Agreement, all utilities shall be located outside of County Right-of-Way.

Comment [CH14]: Unless specifically allowed in a Development Agreement, all utilities shall be located outside of County Right-of-Way.

§5.03. Roadway and Right-of-Way Information

A proposed subdivision shall satisfy the requirements of Chapter 721 relating to design of roadways, secondary access, and transportation planning and shall contain a written certification from a Texas licensed Professional Engineer that the location and dimensions of roadways as set forth are in accordance with these Regulations. This information is not the sealed Construction of Roadways and Storm Water Management plans that are required after approval of Preliminary Plan. The information included with the Application shall illustrate:

Comment [CH15]: Clarifies new requirements added to Chapter 721.

(A) Location, length and right-of-way widths of all proposed roadways and a depiction of how all proposed roadways shall connect with previously dedicated, platted or planned roadways within the vicinity of the Subdivision;

(B) Proposed names or designations for all roadways, public access easements, and shared access driveways, and a statement indicating that the Applicant has coordinated all such names or designations with the County "911" coordinator;

(C) Location, size and proposed use of all proposed access easements, or Shared Access Driveways, if any;

(D) A statement indicating whether the Applicant shall seek public dedication of the roadways or designation of roadways as private roadways;

DRAFT

(E) The number of feet of frontage of each Lot onto a regulated roadway;

(F) A roadway design report prepared in accordance with Chapter 721, unless exempted pursuant to Chapter 721, Subchapter 5;

(G) A designation of the classification of each roadway to be constructed or existing roadways abutting any Lot as determined in accordance with Chapter 721 below; and,

(H) Proposed location of all depth gauges, at all road crossings where the 100 year frequency flow or lesser frequency storm event is anticipated to flow over the roadway surface and any proposed gates or warning devices. The Department shall evaluate and recommend to the Commissioners Court whether or not to require additional gates or warning devices at such locations.

(I) Traffic Impact Analysis, per Chapter 721.6.03

~~(H)~~(J) Certification that each lot shown on the plat has adequate frontage to allow for compliance with driveway spacing requirements.

Comment [CH16]: Language added for Turn Lanes and Traffic Impact Analysis, as added to Chapter 721.

Comment [CH17]: This will make sure that lots will be able to meet basic driveway spacing criteria.

§5.04. Flood Plain and Storm Water Management Information

A proposed Subdivision shall satisfy the requirements of Chapter 725 of these Regulations relating to Storm Water Management Standards and shall contain a written certification from a Texas licensed Professional Engineer stating that the location and approximate sizes of the storm water management structure set forth are in accordance with the Department's Storm Water Management Standards. Proposed subdivisions with five (5) or fewer lots meeting the minimum Lot size requirements are exempt from (E), (F), and (G) of this ~~subchapter~~section.

Comment [CH18]: This will keep this section from conflicting with Chapters 725 and 735.

The information included with the Application shall illustrate:

(A) Elevation contours at no greater than two-foot (2') intervals, based on the North American Vertical Datum (NAVD) of 1988 [NAVD 88];

(B) All Special Flood Hazard Areas identified by the Federal Emergency Management Agency as identified in Chapter 735, Subchapter 3;

(C) For each Lot containing a Special Flood Hazard Area, sufficient additional contours to identify and delineate the Special Flood Hazard Area (including the 100-year floodplain and regulatory floodway, if any) and the lowest allowable finished floor elevation. If base flood elevations and lowest allowable finished floor elevations have not already been established, they shall be established by a method satisfactory to the Director;

(D) For each subdivision containing a Special Flood Hazard Area, at least one benchmark showing the NAVD 88 elevation, as well as Geographic Coordinates, shall be established using the procedures presented in the Texas Department of Transportation (TXDOT) Survey Manual, latest edition;

(E) A storm water management plan depicting the anticipated flow of all storm water onto and from the Subdivision and showing all major topographic features on or adjacent to the property including all water courses, special flood hazard areas, ravines, bridges and culverts;

(F) The location and size of all proposed storm water management structures and easements, including on-site retention or detention ponds and easements and the impact of lot and roadway layouts on drainage;

DRAFT

§5.07. Dedication of Additional Parkland and Open Space

The establishment of Parkland and/or open space in amounts exceeding the minimum requirements of this Subchapter shall be eligible for any economic incentives authorized under these Regulations.

5.08. Sidewalks

Sidewalks shall be required on at least one side of all streets in all newly platted subdivisions resulting in ~~25~~100 lots or more with an average lot size of one acre or less. All appropriate ADA requirements shall be met with detailed attention being given to street crossing and curb-cut standards. Sidewalks constructed inside proposed County ROW shall be maintained by the ~~HOA or~~ development's utility district or as specified in any associated Development Agreement. Sidewalks shall be constructed flush with the back of curb where curbing is provided. Sidewalks shall only be required for new roads within Hays County. Sidewalks will be constructed and maintained to such a standard as set forth in the "Hays County Standards Specifications: Sidewalks".

Comment [CH19]: Sidewalk language added, per Transportation Department to help set standard for sidewalk requirements.

Comment [HC220]: Newly platted subdivisions with 25 lots or more qualifier added so Hays County will not have to require sidewalks for old subdivisions or small rural subdivisions.

Sub-Chapter 6 - Preliminary Plan

§6.01. General Information

A proposed Preliminary Plan shall include all of the information required by Subchapter 5 of this Chapter.

§6.02. Number of Copies

The Applicant shall submit with the Application four (4) eighteen inch (18") by twenty four inch (24") copies of the Preliminary Plan and one digital data file of the signed/sealed final drawings in accordance with the Hays County Digital Data Submittal Standards. The Department may require up to eight (8) additional hard copies of the Preliminary Plan.

Sub-Chapter 7 - Approval of Preliminary Plan

§7.01. Criteria for Approval of Preliminary Plan

The Commissioners Court shall approve a Preliminary Plan if it satisfies each of the requirements for a Preliminary Plan set forth in these Regulations.

§7.02. Construction Activities

Approval of a Preliminary Plan does not authorize any construction or Development activities, except as permitted in Chapter 731, but merely authorizes the Applicant to proceed with the preparation of a Final Plat.

§7.03. No Conveyance of Lots

Conveyance of Lots depicted on a Preliminary Plan shall not be permitted until the Final Plat has been approved and the record plat filed with the County Clerk.

§7.04. Expiration

In accordance with Section 245.005 of the Local Government Code, approval of a Preliminary Plan shall expire and be of no further force and effect in the event a Final Plat for a portion of the

DRAFT

(I) Any impervious cover calculations required to document compliance with a development agreement or any other applicable federal, state or local regulation.

§8.02. Flood Plain and Drainage Information

(A) For Subdivisions containing Special Flood Hazard Areas, multiple benchmarks shall be provided and recommended finished floor elevations established for each Lot in accordance with Chapter 735.

(B) For each Subdivision containing a Special Flood Hazard Area, at least one monument containing latitude and longitude and NAVD 88 datum elevation.

§8.03. Roadway and Right-of-Way Information

(A) Total length of all roadways, to the nearest one-tenth (0.1) mile, and a declaration as to which category of roadway will be constructed, as described in Chapter 721.

(B) Total area of all rights-of-way proposed for dedication.

(C) The approved names or designations for all roadways, public access easements, and shared access driveways.

(D) Construction plans, specifications and cost estimates, prepared by a Texas licensed professional engineer, and financial assurance documentation, if required, in accordance with Chapter 721.

(E) A set of Geographic Coordinates for each intersection, change in direction, or point of curve for the centerline of all regulated roadways and shared access driveways for the purpose of establishing "911" Street addresses within the Subdivision.

(F) The following statement shall appear prominently on the Final Plat: "No driveway constructed on any Lot within this subdivision shall be permitted access onto a public or private roadway unless:

(1) a Permit for use of the County Roadway Right-Of-Way has been issued under Chapter 751; and,

(2) the driveway satisfies the minimum spacing requirement for driveways set forth in Chapter 721."

(G) Where driveway culverts are required, the minimum driveway culvert size for each driveway shall be shown. In all cases, no driveway culvert smaller than a Design 2 will be allowed.

~~(G)~~ (H) Where reservation of Right-Of-Way per Section 721.6.01 is required, the following statement shall appear prominently on the Final Plat: "The area identified as 'Reserved for Future Right-Of-Way' is located within a proposed future roadway per the Transportation Plan of Hays County. Additional information regarding this area may be obtained from the Hays County Transportation Department.

Comment [CH21]: Language added to require driveway permits along all roads within Hays County.

Comment [CH22]: Adding Design 2 will allow us to keep everything up to the correct specifications. Design 2 specifications can be found in Hays County Driveway Specifications

Comment [RM23]: Language added to ensure that prospective property owners understand the potential for future development of public roadways.

§8.04. Water, Wastewater and Utilities Information

(A) The following statement shall appear prominently on the Final Plat: "No structure in this subdivision shall be occupied until connected to an individual water supply or state-approved community water system. Due to declining water supply, prospective property

DRAFT

§9.03. Expiration

(A) Approval of a Final Plat shall expire and be of no further force and effect in the event that:

(1) A Record Plat, as required by these Regulations, is not actually filed with the County Judge's office for signature within twelve (12) months of the approval of the Final Plat; or,

(2) No progress has been made towards completion of the project within the project activity period. For purposes of this section, the term "project activity period" means the later of:

(a) Two (2) years from the date of approval of the Final Plat; or,

(b) Five (5) years from the date the first permit application was filed for the project; or,

(3) No portion of the land subdivided under a plat approved under this Chapter is sold or transferred before January 1 of the 51st year after the year in which the plat was approved.

(B) The intent of establishing an expiration period for a Final Plat under this Section is to allow the County to enforce future minimum size, configuration and arrangement standards on lots within the expired Subdivision and is not intended to deprive the public of any use of dedicated public features within the expired Subdivision. Publicly dedicated features included in any Final Plat that expires under this Section shall remain subject to control by the County, including the ability to require a configuration on any subsequent plat for the affected property that accommodates at least the footprint of the public features included in the expired plat.

Sub-Chapter 10 - Record Plat

§10.01. Submission of Record Plat to the Department

Following approval of the Final Plat, the Applicant shall present a Record Plat to the Department for final approval and delivery to the County Judge for execution, in accordance with Chapter 701, Subchapter 12. The Record Plat shall contain, or be submitted with, the following:

(A) All items required in Subchapters 5 and 8 above; and,

(B) Original signatures and original seals for licensed or registered professionals.

§10.02. Filing with the County Clerk

Final Plats that have been executed by the County Judge or the County Judge's designated representative may be presented to the County Clerk for filing in the County plat records, in accordance with Chapter 701, Subchapter 12.

§10.03. Record Plat

One (1) eighteen inch by twenty four inch (18" x 24") signed paper plat shall be presented to the County Clerk for recording as the Record Plat. All writing and drawings on the Record Plat must be large enough to be easily legible following recording.

10.04. Record Plat Expiration

Comment [CH24]: Language added to set deadline to record plat after final approval.

DRAFT

Record plats will not be accepted by the County Clerk for recording if presented twelve (12) months after final approval. If twelve (12) months have passed before final plat has been recorded, the developer will be required to go before Commissioners Court seek permission to have record plat reapproved.

10.05 Record Plat Affidavit

-Record plats which indicate a total acreage that does not match the corresponding Tax Certificate will require an affidavit to be filed with the plat. The affidavit shall certify that the tax certificate describes all of the property within the subdivision.

Comment [HC225]: Changed to the language to show our process for recordation. Preliminary plans do not normally get recorded with the County Clerk, so seeking approval for a reapproved final plat is the only item that would need to be discussed in court.

Comment [CH26]: New requirement requested by County Clerk to limit liability when there are discrepancies between the acreage depicted on the plat and the acreage shown on the corresponding tax certificate.

Sub-Chapter 11 - Plat Revisions

This sub-chapter outlines the requirements and processes for plat cancellations, plat vacations, replats, and amended plats as authorized under Texas Local Government Code Sections 232.008, 232.009, and 232.0095.

§11.01. Cancellation

Any Application to cancel an existing plat or any portion of an existing plat of a subdivision located outside of the extra-territorial jurisdiction of any municipality shall be submitted and considered in accordance with Texas Local Government Code Section §232.008, which establishes, among other things:

(A) The Application shall be granted if it is shown that the cancellation of all or a part of the subdivision does not interfere with the established rights of any purchaser who owns any part of the subdivision, or it is shown that the purchaser agrees to the cancellation;

(B) Notice of the Application must be published in English in the County for at least three weeks before action is taken on the application;

(C) Upon Application of the owners of 75 percent of the property included in the subdivision, phase or identifiable part, the Commissioners Court shall authorize the cancellation upon notice and hearing as required under Texas Local Government Code Section §232.008, provided that if the owners of at least 10 percent of the property affected file written objections with the Commissioners Court, the grant of an order of cancellation is at the discretion of the Commissioners Court; and,

(D) Establishing a certain private action for damages against the Applicant for persons who protest unsuccessfully against a cancellation application. In the event of any conflict or inconsistency between the summary set forth above and the actual terms of Texas Local Government Code §232.008, as amended, the terms of the Texas Local Government Code shall control in all respects.

§11.02. Plat Vacation

Any application to vacate an existing plat or any portion of an existing plat of a subdivision located within the extra-territorial jurisdiction of any municipality shall be submitted and considered in accordance with Texas Local Government Code Section 212.013.

DRAFT

§2.04. Urbanized Local Roadway

An Urbanized Local Roadway shall be a two lane paved roadway, with improved shoulders or curb and gutter, and considered a Special Purpose Road with a design capacity of up to 1,000 ADT in accordance with AASHTO design standards and third-class roadways in accordance with TTC Chapter 251.

§2.05. Minor Collector

A Minor Collector shall be a two lane paved roadway, with improved shoulders or curb and gutter, and considered a Rural Collector with a design capacity of 1,001 to 2,500 ADT in accordance with AASHTO design standards, and may be either second-class or third-class roadways in accordance with TTC Chapter 251.

§2.06. Major Collector

A Major Collector shall be a two lane or larger paved roadway, with improved shoulders or curb and gutter, and considered a Rural Collector with a design capacity of 2,501 to 5,000 ADT in accordance with AASHTO design standards, and may be either first-class or second-class roadways in accordance with TTC Chapter 251.

§2.07. Minor Arterial

A Minor Arterial shall be a two lane or larger paved roadway, with improved shoulders or curb and gutter, and considered a Rural Arterial with a design capacity of 5,001 to 15,000 ADT in accordance with AASHTO design standards, and may be either second-class or third-class roadways in accordance with TTC Chapter 251.

§2.08. Major Arterial

A Major Arterial shall be a two lane or larger paved roadway, with improved shoulders or curb and gutter, and considered a Rural Arterial with a design capacity of greater than 15,000 ADT in accordance with AASHTO design standards, and may be either first-class or second-class roadways in accordance with TTC Chapter 251.

Sub-Chapter 3 - Public Roadways

§3.01. Dedication to Public

Any dedication of a roadway to the County for public use shall be accomplished using one of the methods allowed under Chapter 701, Subchapter 11. No dedication shall be effective until the record document is recorded. In no event shall any private lot extend into a dedicated public roadway.

§3.02. Publicly Maintained and Dedicated Roadways

Roadways dedicated to the public (Public Roadways) shall be required in all developments approved under these Regulations~~, except those satisfying the criteria for private roadways,~~ as set forth below. All such Public Roadways shall be paved and shall be Regulated Roadways designed and constructed in accordance with the specifications set forth in Chapter 721, Subchapter 5. The boundary lines of all subdivision Lots fronting onto a publicly dedicated right-of-way shall be contiguous with the boundary of the right-of-way.

Comment [CH27]: Section 4.01 will cover this statement.

DRAFT

§3.03. Construction of Public Roadways

Public Roadways shall be considered public infrastructure, subject to the requirements of Chapter 731. Unless interim authorization for construction is obtained under Chapter 731, construction of public roadways shall not commence until such time as a Development Authorization has been issued by the County on an Application filed under these Regulations.

§3.04. Connections to Public Roadways under the Jurisdiction of Other Entities

Certain Regulated Roadways and appurtenances governed by these Regulations may require connection to or construction on or within the right-of-way of public roadways under the jurisdiction of other public entities, including the Texas Department of Transportation (TXDOT), or any other authorized state or federal government entity. All construction and access to these roadways conducted in conjunction with a development authorized under these Regulations shall comply with the requirements of the entity having jurisdiction over the affected public roadway.

Sub-Chapter 4 - Private Roadways

§4.01. General Requirements for Private Roadways

All private roadways qualifying as Regulated Roadways (Regulated Private Roadways) shall be designed and constructed in accordance with the standards in Chapter 721, Subchapter 5 for Public Roadways. All Regulated Private Roadways shall have a surface suitable for all-weather access to all portions of the proposed development served by such Regulated Private Roadway. All Regulated Private Roadways shall meet the requirements of Chapter 731 with the exception of Sub-Chapter 3 in regard to Acceptance of Public Infrastructure for Maintenance.

Regulated Private Roadway construction shall be tested and inspected as deemed necessary by the Director of Transportation and as described in Specifications for Paving and Drainage Improvements.

Comment [CH28]: Regulations added so private roads can be verified by the Transportation Department as being constructed to county standards.

§4.02. Criteria for Determining Private Roadway Status

Regulated Private Roadways shall be permitted only in conjunction with a development approved under these Regulations if they satisfy each of the following criteria:

(A) The person(s) responsible for the operation and maintenance of the Regulated Private Roadway has executed an agreement with the Commissioners Court acknowledging responsibility for such operation and maintenance;

(B) The executed agreement includes financial assurance, as required by the Commissioners Court; and,

(C) Lots within the development served by the Regulated Private Roadway shall have an average size greater than five (5) acres; or,

(D) The Commissioners Court has entered into an approved Development Agreement with the Owner or Permittee regarding the development of a master-planned community of no fewer than fifty (50) residential Lots.

§4.03. General Requirements for Maintenance of Private Roadways

Development Authorizations that include the use of Regulated Private Roadways shall be subject to a maintenance agreement with the County. The person(s) responsible for maintenance under

DRAFT

storm water management facilities or other facilities within the right-of-way of a Regulated Roadway.

§5.02. Design Requirements

All Regulated Roadways and related improvements shall be designed and installed so as to provide, to the maximum extent feasible, a logical system of utilities, drainage and roadways and to permit continuity of improvements to adjacent properties. A Roadway Design Report, prepared by a Texas licensed professional engineer, certifying compliance with these Regulations and other applicable standards shall be prepared and submitted with the Application. All Regulated Roadway construction shall be inspected by Hays County Transportation Department and be compliant with current ADA standards.

Comment [CH29]: Language added so all new roads within Hays County shall be inspected by Transportation to ensure proper quality.

§5.03. Minimum Rights of Way and Building Setbacks

All Regulated Roadways shall comply with the established minimum right-of-way widths and building setback lines based on the roadway classification. Above-grade construction is prohibited within the established building setback lines. Building setback lines apply on each side of a Regulated Roadway. The established minimum right-of-way widths and building setback lines are presented in Table 721.02, below. Building setbacks as shown in Table 721.02 shall be measured from the established ROW line.

Comment [RM30]: New language clarifies existing requirement.

§5.04. Design and Construction Standards

(A) The classification and construction standards for all Regulated Roadways shall be determined according to the Average Daily Traffic anticipated for the roadways. The Roadway Design Report shall include estimates of the Average Daily Traffic (ADT) before and after the proposed development. The methodology for estimating ADT shall be based on recognized industry standards, including those utilized by the Texas Department of Transportation (TXDOT) and AASHTO. The post-development ADT shall be based on the maximum number of Lots that would be permitted in the approved development plan.

(B) The geometric requirements for Regulated Roadways shall be identified in the Roadway Design Report and shall be designed to accommodate the design ADT of the roadway. The minimum geometric standards for Regulated Roadways are summarized in Table 721.02.

(C) The design and construction of all Regulated Roadways shall conform to the Hays County Specifications for Paving and Drainage Improvements, as adopted by the Department, and shall include all necessary improvements, including necessary signage and traffic control devices. All signage and traffic control devices shall conform to the "Texas Manual of Uniform Traffic Control Devices," latest edition, as adopted by TXDOT. Speed bumps are not authorized as traffic control devices on Public Roadways. Pedestrian elements (e.g. sidewalks, crosswalks, access ramps, etc.) for projects in Public Roadways shall comply with the accessibility requirements of the Texas Department of Licensing and Regulation (TDLR), and if required, shall be submitted to TDLR for review and approval.

(D) There is an incentive for Lots Larger than Five Acres. As an incentive to developers to create lots larger than five acres and to reduce their associated development costs,

DRAFT

Country Lane roadways may be constructed, without calculation of the Average Daily Traffic, if all Lots with frontage or access onto the roadway are (i) larger than five acres in size, (ii) restricted by a note on the Record Document limiting development to one single family dwelling unit per Lot and prohibiting TCEQ Regulated Development, and (iii) the application is approved by the Department.

(E) There are incentives for Bicycle Paths and Lanes. If portions of a Local Roadway or Minor Collector are set aside and appropriately designated for the use of bicycles (or a separate bike path is constructed parallel to the roadway), then the amount of right-of-way dedicated to such bicycle use shall be credited against the width of required shoulders and the Department may reduce the estimated Average Daily Traffic per Lot in determining the design criteria for the roadway served by the bicycle path/lane, in an amount determined appropriate by the Department.

(F) Clearance of Right-of-Way: upon request by the Owner, the Department shall, to the extent it is safe and prudent to do so, permit preservation of trees of greater than ten inches (10") in diameter, measured one foot from the ground (or the replanting of trees by the Owner), within rights of way of roadways classified as Country Lanes, Local Roadways and Minor Collectors, with greater preservation of trees permitted along roadways with the lower design speed. The Owner shall be responsible for affixing reflectors or other safety devices to any trees preserved within the right-of-way.

§5.05. Access to Regulated Roadways

Except with respect to Lots served by Shared Access Driveways, each Lot shall have the minimum direct frontage onto a Regulated Roadway set forth below and Driveways shall be spaced no closer than the minimum space intervals set forth below, depending on the classification of road onto which the Lot has frontage and the driveway has access. All such driveways shall conform to the Hays County Driveway Specifications, as adopted by the Department.

(A) Incentive for Qualifying Lots. Qualifying Lots will be exempt from the minimum lot frontage and driveway spacing requirements specified above if approved by the Department and Commissioners Court with due regard to safety concerns. A Qualifying Lot is any Lot that (i) is restricted by plat note to development of a single family residence, (ii) has direct access onto a Regulated Roadway and (iii) satisfies the minimum Lot size requirements set forth in these Regulations either through actual lot size or lot size averaging.

(B) Flag Lots. Flag lots shall ~~generally~~ not be permitted, except if approved by the Commissioners Court as consistent with the intent and spirit of these Regulations. The Department shall advise the Commissioners Court if a proposed Lot constitutes a "flag lot" and the Commissioners Court shall, in reviewing all the circumstances, make the final determination.

Comment [CH31]: Language changed to help strengthen Hays County regulations on Flag Lots.

~~(B)~~ (C) Residential driveways shall comply with the driveway spacing requirements shown in Table 721.02. Additionally, all driveways shall comply with the design standards contained in Specifications for Paving and Drainage Improvements, including installation of safety end treatments and paved (HMAC or PCC) surfacing. Construction and maintenance of driveways, including those portions contained inside County ROW, is the responsibility of the property

DRAFT

owner. Residential driveway requirements apply equally to driveways in private subdivisions that access regulated private roadways.

Comment [CH32]: Driveway specifications added to clearly define what we are requiring of residential driveways being constructed on public as well as private roads.

§5.06. Commercial Driveways

Driveways serving commercial development shall be spaced at the minimum intervals of one hundred fifty feet (150'). Joint-use driveways may be utilized in situations that limit the number of driveway access permits that are issued by either the State of Texas or Hays County to a public roadway, or where safety concerns provide a satisfactory explanation for its use.

§5.07. Shared Access Driveways

Up to one (1) Lot without independent access to a Regulated Roadway may obtain access to a Regulated Roadway by means of a Shared Access Driveway if approved by the Commissioners Court. An additional two (2) Lots having independent access to a Regulated Roadway may also share the use of the Shared Access Driveway. Shared Access Driveways are intended as a means to provide flexibility in the development process, preserve the rural character of the land and avoid excessive infrastructure costs when such costs would provide little or no social benefit. Shared Access Driveways are not intended to serve as a substitute for interior roads. Excessive use of Shared Access Driveways will not be permitted. Any application proposing shared access driveways shall also satisfy the following requirements:

(A) A plat note must be conspicuously displayed on the plat stating:

(1) All lots served by a Shared Access Driveway are restricted to one single family residence per lot and if any other Development of a Dwelling Unit occurs on any of the Lots obtaining access through the Shared Access Driveway, then such new Dwelling Unit must be constructed on a separately platted lot with direct frontage onto and physical access to a Regulated Roadway prior to construction of the Dwelling Unit. A duplex will not be considered a single family residence for purposes of this subparagraph.

(2) The owners of the Single Family Residences obtaining access through the Shared Access Driveway shall be solely responsible for all maintenance of the driveway, including maintaining any drainage structures associated with the driveway. The driveway must be maintained at all times in a condition that will permit unencumbered vehicular access by emergency vehicles.

(B) Each of the Lots sharing the use of the Shared Access Driveway shall hold equal, indivisible and unrestricted rights in the Shared Access Driveway, which rights shall be established by recorded easement and the easement shall run with the land of each of the benefited Lots. The easement instrument shall clearly state each Lot's pro rata responsibility with respect to future maintenance or repairs of the Shared Access Driveway.

(C) The Shared Access Driveway shall be no longer than one quarter mile in length and must have a minimum distance of (a) ~~200~~ 120 feet from any other driveway entering onto the Regulated Roadway and (b) 500 feet from any other Shared Access Driveway.

Comment [CH33]: The previous 200’ separation distance was too restrictive.

(D) The Shared Access Driveway shall have a name or designation approved by the County “911” Coordinator and a separate “911” address shall be established as for each Lot which relies on a Shared Access Driveway for access.

DRAFT

(E) Up to three (3) Lots ~~not having~~ without independent access to a Regulated Roadway may share a Shared Access Driveway with up to two (2) Lots having independent access to a Regulated Roadway if all other requirements of ~~this~~ these Regulations are met and all Lots using or adjacent to the Shared Access Driveway are larger than five acres in size and restricted by Plat note limiting development to one single family residence per Lot and prohibiting TCEQ Regulated Development.

(F) Shared Access Driveways providing access to any lot greater than 5 acres in size shall have a minimum width of 60 feet~~.~~ unless the lots are prohibited from further subdivision.

~~(E)~~ Lots smaller than 5 acres which are served by a Shared Access Driveway will be prohibited from further subdivision unless additional improved access is provided.

~~§5.08.~~ Coordination with "911" Addressing System

If not previously established, all Applications for Development Authorization submitted to the County that include a new or altered Regulated Roadway, shared access easement, or a shared access driveway shall obtain approval for the names and/or designations for such roadways, easements or driveways from the County "911" Coordinator, in accordance with Chapter 701, Subchapter 16. The Applicant shall also establish a "911" address for all lots or components of the development served by a Regulated Roadway, shared access easement or shared access driveway associated with that development, in accordance with Chapter 701, Subchapter 16.

§5.09. Speed Limits for Regulated Roadways

(A) If not previously established, all Applications for Development Authorization submitted to the County that include a new or altered Regulated Roadway, shared access easement, or a shared access driveway shall establish an appropriate maximum speed limit for such roadways, easements or driveways. Such established maximum speed limits shall not be greater than the maximum speed limits authorized under TTC Chapter 545.352 but shall not be less than the lower maximum speed limits authorized under TTC Chapter 545.355 for the specific type of roadway under consideration. For roadways with speed limits that are established at less than the maximum speed limits authorized under TTC Chapter 545.352, the Roadway Design Report shall include an explanation of the reasons for the reduced maximum speed limits.

(B) Speed limits shall not take effect until such time as the County approves and issues the Development Authorization under which those speed limits were established and signage indicating the established speed limit(s) is actually posted along the roadway.

§5.10. Construction Quality Assurance for Regulated Roadways.

The Permittee shall submit document all required inspections and tests at the completion of each phase of construction of the roadway. Construction Quality Assurance testing shall comply with the following:

(A) Tests on all components of the pavement system, including plasticity index, ~~tests for~~ compacted density, depth of base, distribution of asphalt, plastic limit, liquid limit, soil classification and other quality assurance tests required by the County's adopted roadway construction specifications.

Comment [RM34]: Language added to provide greater flexibility for lots which could be further subdivided at a later date.

Comment [CH35]: Additional component tests that are necessary for review added.

DRAFT

(B) It is the responsibility of the Permittee to coordinate all inspections and laboratory tests with the Department. ~~and not to proceed with construction~~ Construction ~~will~~may not proceed until proper inspections and tests have been ~~obtained~~conducted and witnessed by the Transportation Department and deficiencies corrected.

(C) ~~Any~~ All laboratory tests ~~and test holes~~ shall be at the expense of the Permittee and submitted to the Hays County Transportation Department.

(D) In no event will any subsequent component be placed on the roadway until the underlying components have been approved in writing by the Department.\

~~(D)~~(E) All Quality Assurance Testing shall be witnessed by a Hays County representative. Hays County Representative shall be notified of scheduled testing prior to 48 hours of testing. All second re-tests will be charged through invoicing to the permittee at the current county rate.

Comment [CH36]: Language clarified.

Comment [CH37]: Language added so all inspections are received by the Transportation Department.

Comment [CH38]: Language added to ensure Hays County has ample time to respond to scheduled Quality Assurance Tests.

DRAFT

Table 721.02 – Design Requirements Based on Roadway Classification

Functional Classification	Country Lane	Local Roadway	Urbanized Local Roadway	Minor Collector	Major Collector	Minor Arterial	Major Arterial
AASHTO Classification	Special Purpose	Local Rural	Special Purpose	Rural Collector	Rural Collector	Rural Arterial	Rural/Urban Arterial
Average Daily Traffic (ADT - one way trips*)	Not more than 100	101-1000	Not more than 1000	1001-2500	2501-5000	5001-15000	More than 15,000
Design Speed (mph)	25 mph	25 mph	25 mph	35 mph	45 mph	55mph	**
No. of Travel Lanes	2	2	2	2	2	4	**
Turn Lanes	No	No	No	~~No~~**	**	**	**
Min. ROW Width (ft)	50	60	40	60	80	100	**
Building Setback (ft)	25	25	25	25	50	50	*50*
Width of Travelway (ft)	18	20	18	22	24	48	**
Width of Shoulders (ft)	2	4	2	5	6	8	**
Minimum Centerline Radius (ft)	200	300	200	375	675	975	**
Min. Tangent Length between Reverse or Compound Curves (ft)	50	100	50	150	300	500	**
Min. Radius for Edge of Pavement at Intersections (ft)	25	25	25	25	25	25	**
Intersection Street Angle Range (degrees)	80-100	80-100	80-100	80-100	80-100	80-100	**
Max. Grade (%):	11	11	10	10	9	8	**
Min. Street Centerline offset at Adjacent Intersections (ft)	110	125	110	125	125	125	**
Min. Stopping Sight Distance (ft)	175	175	175	250	350	550	**
Min. Intersection Sight Distance (ft)	250	250	250	350	450	550	**
Ditch Foreslope Grade	4:01	4:01	4:01	5:01	5:01	6:01	**
Ditch Backslope Grade	3:01	3:01	3:01	4:01	4:01	4:01	**
Min. Cul-de-sac ROW/ Pavement Radius (ft)	70/45	70/45	70/45	70/45	N/A	N/A	N/A
Min. "T" End ROW/ Pavement Length (ft)	80/65	80/65	80/65	N/A	N/A	N/A	N/A
Min. "T" End ROW/ Pavement Width & Radius (ft)***	40/20	40/20	40/20	N/A	N/A	N/A	N/A
Min. Lot Frontage (ft)	30	50	30	100	150	150	150
Min. Drive Spacing (ft)	50	50	50	75	120	120	120

Notes:
All residential driveways shall be constructed a minimum of 5' from edge of property lines or easement line.
All commercial driveways shall be constructed a minimum of 15' from edge of property lines or easement line.

* ADT shall be based on an average of 10 one-way trips per dwelling unit per day for residential lots. ADT calculations for commercial or other lots shall approved by the Department on a case-by-case basis.
** Noted elements shall be approved by the County Engineer on a case-by-case basis.
*** "T" End Designs must conform to minimum AASHTO Standards
AASHTO – American Association of State Highway and Transportation Officials
Building Setback – Minimum building setback, in feet, applicable to each side of the roadway

Comment [CH39]: Changed from "No" to ** due to Traffic Impact Analysis language that was added.

Comment [CH40]: Language added to clarify how far from property line a driveway needs to be constructed.

DRAFT

Sub-Chapter 6 - Transportation Planning

§6.01. Right-of-Way Dedication

An applicant for a Development Authorization under these regulations, including subdivision plats and manufactured home rental communities, may be required to dedicate right of way in accordance with the currently adopted Hays County and Capital Area Metropolitan Planning Organization Transportation Plans.

Comment [CH41]: "Shall" was changed to "may"
This will allow Hays County to either require dedication or just request the developer/property owner to reserve the right-of-way for future transportation plans.

§6.02. Mail Kiosks

All mail kiosks located within dedicated public or private right of way shall be located adjacent to and off the right shoulder of typical neighborhood streets, not on collectors, and be at least 100 feet from the nearest intersection, unless located in a parking lot. A stacking space for a minimum of 2 cars shall be provided. A signed, pedestrian walkway shall be provided between the exit lane parking and the kiosk. ADA requirements will apply to all kiosk locations. Kiosk locations shall be approved by local Post Masters..

Comment [CH42]: Mail Kiosks language added. Language added for Transportation to have written kiosk standards for developers.

§6.03. Traffic Impact Analysis

Comment [CH43]: Traffic Impact Analysis language added. Language added to set standard for all new developments coming into Hays County that will generate significant traffic pattern changes.

An applicant for a Development Authorization under these regulations, including subdivision plats and manufactured homes community, may be required to include turn lanes in their construction plans, specifications, and cost estimates, prepared by a Texas licensed professional engineer, and financial assurance documentation, if required, in accordance with Chapter 721.

(A) A Traffic Impact Analysis (TIA) is required for assessing the need for turn lanes in new or expanded developments. Cost of the TIA will be borne by the developer.

(1) Applicability. A traffic impact analysis shall be required for all developments that are projected to generate 100 or more peak hour vehicle trips per day.

(2) Preapplication meeting: When a traffic impact study is required, the type and scope of the study shall be determined during a preapplication meeting with the Director of Development Services and the Transportation Director. Other representatives from other agencies and departments may attend. The elements to be determined during the meeting shall include the following:

(a)Type of study: The possible types of reports include: a letter report, full traffic impact analysis report or special report (e.g., sight distance survey).

(b) Definition of impact area: The impact area shall be identified by the Director of Transportation at the preapplication meeting.

(c) Period of analysis: Periods of analysis may include: Daily traffic, a.m., p.m., or weekend peak hour.

(d) Analysis scenarios: Scenarios for analysis include: Existing conditions, opening year conditions with and without development, and ten years after opening with and without development.

(e) Process: Process for determining trip generation and distribution including trip generation category, diversion assumptions and distribution assumptions.

(f) Growth rate assumption: The rate of growth assumed in background traffic assumptions.

DRAFT

(g) Mitigation plan: Where the analysis indicates that the project will create deficiencies in the impact area, improvements shall be implemented at no cost to Hays County. The design of improvements shall be in accordance with Hays County specifications and, where appropriate, the Texas Department of Transportation.

(3) Traffic study elements: A letter report or special report shall only include those elements agreed upon in the preapplication meeting.

(4) Required Improvements: Where the TIA findings suggest improvement to regulated roadways, construction of these improvements shall be the responsibility of the developer.

6.04 ~~Secondary~~~~Emergency~~ Access for Certain New Subdivisions

Comment [CH44]: Secondary Access requirement added for new subdivisions. This is to help protect residents from flood, fire, and traffic issues.

A proposed subdivision may be required to provide more than a single point of access, prior to plat approval.

(A) All new subdivisions will be required to have ~~secondary~~emergency access within the proposed development if they meet the following criteria:

(1) The subdivision proposes more than ~~500~~1500 Trips Per Day to be on the proposed roadway system ;or

(2) The length of the entrance street within the subdivision exceeds one (1) mile in length.

Comment [CG45]: Added entrance.

(B) All new subdivisions will be required to have secondary access within the proposed development if they meet the following criteria:

(1) The subdivision proposes more than 7500 residential trips per day to be on the proposed roadway system.

New subdivisions that require ~~secondary~~emergency access shall have two points of ingress/egress that will connect to different external streets. External streets are required to be outside of the proposed subdivision.

A proposed subdivision may have one access ~~street~~point if the Commissioners Court decides that providing more than one access street is unnecessary, detrimental to development, or impractical after considering:

(A) Traffic control;
(B) Traffic Safety;
(C) Fire & Flood Safety;
(D) Topography;
(E) The density of the subdivision and surrounding development;
(F) Proposed future development of contiguous property is anticipating to provide additional access to subdivision, or;
(G) Adverse environmental effect that additional roads may have.

DRAFT

§2.03. Construction of Public Storm Water Management Facilities

Public storm water management facilities shall be considered public infrastructure, subject to the requirements of Chapter 731. Unless interim authorization for construction is obtained under Chapter 731, construction of public storm water management facilities shall not commence until such time as a Development Authorization has been issued by the County on an Application filed under these Regulations.

Sub-Chapter 3 - Design Criteria

§3.01. Design of Storm Water Management Facilities

All storm water management facilities and related improvements shall be designed and installed so as to provide, to the maximum extent feasible, a logical system of storm water management and to permit continuity of storm water management facilities to adjacent properties. All storm water management facilities shall be designed and/or evaluated by a Texas licensed professional engineer. Documentation evidencing compliance with these Regulations shall be submitted to the Department with the Application. Drainage, flood control and storm water management design methodologies shall be based upon the methods used by the Texas Department of Transportation, the "Hays County Standard Specifications: Drainage" or other commonly accepted engineering practices used within the area. All design and/or evaluation computations for flood plains and storm water management facilities shall be based on fully developed upstream conditions. For upstream areas that extend off the Subject Property, the Applicant may estimate the fully developed conditions based on information available from the Department based on regional planning efforts or other criteria adopted by the County.

Comment [CH46]: Added to refer to the outside document that will house all criteria for Drainage requirements

§3.02. Control of Runoff Rate and Volume

Storm water runoff from any proposed development that is discharged from the Subject Property onto adjacent property owners or into any other county storm water management facility or any such storm water management facility associated with an existing roadway, whether public or private, must be released at a controlled rate. For storm events including the two (2), five (5), ten (10), twenty-five (25), and one hundred (100) year frequency, storm water runoff may be discharged under the post-development conditions at a rate no greater than the pre-development condition. Post-development storm water management calculations shall be based on fully developed conditions. The Department shall require the submission of materials documenting that the proposed development will be in compliance with this Section.

§3.03. Sizing of Storm Water Management Facilities

All storm water management facilities, including ditches, drainage pipes, roadway curbs, gutter inlets, driveway or roadway culverts, and storm sewers shall be designed to intercept and transport storm water runoff to a public storm water management facility or a defined watercourse.

(A) Storm water management facilities shall be sized to prevent inundation during the 25-year frequency design storm event for all portions of lots not within a building setback line.

(B) Storm water management facilities crossing Regulated Roadways shall be sized to accommodate runoff from the following frequency design storm events without inundating the roadway, based upon the classification of Roadway, as set forth below.

DRAFT

Table 731.03 – Design Storm Frequency Based on Roadway Classification

Roadway Classification	Storm Frequency
Country Lane	5 year
Local Roadway	10 year
Urbanized Local Roadway	10 year
Minor Collector	15 year
Major Collector	25 year
Minor Arterial	25 year
Major Arterial	25 year

(C) Unless a larger minimum size is specified by the design engineer, all driveway culverts shall be ~~at least eighteen (18) inches in diameter~~current standard size.

§3.04. Conveyance of 100-Year Storm Frequency Flows

In addition to the minimum design criteria included in this Subchapter, the storm water management system shall be designed to convey all channelized or concentrated flows from a 100 year frequency storm within defined right-of-way or easements.

§3.05. Maximum Headwater Elevation for Roadway Crossings

(A) All roadways, culverts underneath roadways, and bridges shall be designed so that storm water runoff from the frequency storm event designated below crossing such roadway or bridge shall not produce a headwater elevation at the roadway greater than six (6) inches above the roadway crown elevation, nor shall it produce a design flow over the roadway at a velocity greater than ten (10) feet per second, based upon the classification of the roadway affected by the storm water management structure:

Table 731.04 – Design Storm Frequency Based on Roadway Classification

Roadway Classification	Storm Frequency
Country Lane	25 year
Local Roadway	25 year
Urbanized Local Roadway	25 year
Minor Collector	25 year
Major Collector	100 year
Minor Arterial	100 year
Major Arterial	100 year

(B) A permanent depth gauge shall be placed at all roadway crossings where the 100 year frequency flow or lesser frequency is anticipated to flow over the roadway surface. The Commissioners Court may require installation of gates or warning devices at all or some of such locations.

(C) All roadway storm water facility crossings shall be designed and constructed to withstand the impact of water being impounded adjacent to the storm water management facility up to and including the 100 year frequency.

DRAFT

CHAPTER 731 - CONSTRUCTION AND ACCEPTANCE OF MAINTENANCE FOR PUBLIC INFRASTRUCTURE

Sub-Chapter 1 - Applicability

§1.01. General Requirements

This Chapter shall govern the construction process for public infrastructure and the procedures and conditions for the County to accept maintenance responsibility for any public infrastructure. Public infrastructure shall include:

(A) Public roadways;

(B) Public storm water management facilities and features;

(C) Public utilities, including water and wastewater utilities; and,

(D) Public safety and emergency access features.

§1.02. Legal Authority

Legal Authority for adopting and enforcing the regulations in this Chapter is granted to the County under TLGC in Chapters 232 and562.

§1.03. Approval Required

Unless interim authorization for construction is obtained under this Chapter, construction of public infrastructure shall not commence until such time as a Development Authorization has been issued by the County on an Application filed under these Regulations. Approval of the Commissioners Court is required prior to the County's acceptance of maintenance responsibility for public infrastructure.

§1.04. Submittal Requirements for Public Infrastructure

Concurrently with the filing of an Application for a Development Authorization under these Regulations, an Applicant seeking approval to construct public infrastructure and related improvements that will be operated and maintained by the County, shall submit the following:

(A) Construction Plans for the improvements, including a certification by a Texas licensed Professional Engineer that the Construction Plans and design of the improvements are in compliance with these Regulations. One (1) set of full size and to scale construction plans in PDF shall be required at time of submittal; and,

(B) The anticipated unit cost of each type of improvement, schedule of materials that will be used, and the total estimated construction cost of all improvements proposed to be constructed in conjunction with the development, prepared by a Texas licensed Professional Engineer.

Sub-Chapter 2 - Construction

§2.01. Approval Required Prior to Construction

(A) Unless interim authorization for construction is obtained under this Subchapter, construction of public infrastructure shall not commence until such a time that a Development Authorization has been issued by the County on an Application filed under these Regulations.

Comment [CH47]: Language added to help streamline the review process.

DRAFT

(B) In the case of a subdivision for which the County has issued an approval of the Preliminary Plan, and for which the Department has issued an approval of the construction plans and cost estimates, the Applicant or Permittee may commence construction of public infrastructure and related improvements upon the posting of an acceptable Performance Assurance with no further approvals required.

(C) An Applicant or Permittee shall post with the Department an acceptable Performance Assurance equal to the full value (100%) of the estimated construction costs for the public infrastructure and related improvements.

(D) In the event the construction of the public infrastructure is completed prior to the County's issuance of the Development Authorization, the Applicant or Permittee may request release of the Performance Assurance.

§2.03. Construction Occurring After Issuance of Development Authorization

The following requirements shall govern the construction of public infrastructure and related improvements that occurs following the County's issuance of a Development Authorization:

(A) Prior to the Department's issuance of a Development Authorization for which the construction of the public infrastructure and related improvements has not yet been completed, the Applicant or the Permittee shall post with the Department an acceptable Performance Assurance. The value of the Performance Assurance shall be equal to the full value (100%) of the estimated construction costs for the public infrastructure and related improvements.

(B) If a Development Authorization is issued prior to completion of construction of all related public infrastructure, an acknowledgment that no Development Authorization will be issued for any Lot until completion of sub-grade of the Permitted Street serving the Lot and, if applicable, installation of all underground utilities.

§2.04. Installation of Public Infrastructure Under Public Roadways

All utility lines, storm water management facilities, and other public infrastructure planned to be constructed under a new paved roadway shall be installed before the roadway is paved. All utility lines, storm water management facilities, and other public infrastructure installed under an existing paved roadway shall be bored and sleeved to a point at least four (4) feet beyond the edge of the pavement and must be approved in advance by the Department, unless otherwise approved by the Commissioners Court.

Comment [CH48]: Transportation requested language addition.

§2.05. Temporary Construction Erosion Controls

All construction of roadways, whether public or private, shall comply with the Hays County Erosion and Sedimentation Control Manual adopted by the Department, as well as the applicable requirements of other jurisdictions regarding temporary erosion control measures. Hays County may require that the erosion control plan be submitted to the Transportation Department and should be available upon request.

§2.06. Development Authorizations within approved Subdivisions

No Development Authorization for a Lot within a subdivision for which the County has issued a Development Authorization shall be issued until the subgrade of the Regulated Roadway serving

DRAFT

the Lot has been completed and, if applicable, the installation of all underground public infrastructure.

§2.07. Construction Changes

Changes in the construction of public infrastructure and related improvements shall require the approval of the Department. Minor changes that do not conflict with the terms of the Development Authorization may be verbally authorized by the field inspector, with those changes subsequently documented in a field change form. For other changes, the Applicant or Permittee shall provide a written request for approval of the change to the Department. The request for the change shall be accompanied by sufficient additional information to identify the changes requested and to allow the changes to be evaluated by the Department for compliance with these Regulations. Where determined to be necessary by the Department, the changes shall be accompanied by new or revised construction plans, specifications and cost estimates prepared by a Texas licensed professional engineer. If the Department determines that the proposed construction changes result in substantive changes to the estimated construction costs, the provision of additional Performance Assurance may be required.

§2.08. Interim Inspections

The Applicant or Permittee shall provide written notice to the Department of the start of construction of public infrastructure and related improvements and shall designate in such notice a contact person to coordinate construction inspections with the Department. The Department shall conduct such interim inspections as it deems necessary. Interim inspections may be conducted without notice. Where the Applicant, Permittee or their contractors require or request inspection by the Department, a minimum of ~~one (1) full working day's notice~~48 hours is required. The Department may issue verbal or written inspection reports. The Applicant or Permittee is responsible for correcting any deficiencies noted during interim inspections.

Comment [CH49]: Additional time ensures that the Department has adequate time to schedule inspections.

§2.09. Final Inspection

Once construction of public infrastructure and related improvements is substantially complete, the Applicant or Permittee shall submit a written request to the Department to conduct a final inspection. This inspection shall be conducted by the Department to determine if all the public infrastructure and related improvements reflected on the construction plans have been constructed in accordance with the Regulations and the construction plans. The Applicant or Permittee is responsible for correcting any deficiencies noted during final inspections. Upon satisfactory completion of a final inspection, the Department shall issue to the Applicant and/or Permittee a written final inspection report, including any minor deficiencies or "punch list" items to be corrected prior to release of Performance Assurance and preparation of the as-built submittals. If permanent vegetation has not been established, the Applicant or Permittee must provide financial assurance to the County that would provide sufficient funds to complete revegetation.

§2.10. As-built Submittals

Following completion of the construction of public infrastructure and related improvements and a final inspection by the Department, the Applicant or Permittee shall submit to the Department:

(A) A written certification stating that the construction is "substantially complete, complies with the construction standards as established by the Hays County Development

DRAFT

Regulations, and was completed in conformance with the approved construction plans and any approved changes," signed by a Texas licensed professional engineer; and,

(B) A complete set of as-built ~~plans~~ records drawings incorporating all changes made during construction, signed and sealed by a Texas licensed professional engineer. As-Built records drawings shall be submitted as PDF on 360 dpi.

Comment [CH50]: Language changed to current vernacular

Comment [CH51]: Language added for more efficient review process.

§2.11. Release of Performance Assurance

Following completion of the construction of public infrastructure and related improvements, and a final inspection by the Department, the Applicant or Permittee may submit to the Department a written request for release of the Performance Assurance. Before release of the performance assurance, the Department shall inspect the public infrastructure and related improvements and the Applicant or Permittee shall remedy all deficiencies prior to release of the performance assurance. If the deficiencies are not properly remedied, the County shall draw on the performance assurance as necessary to remedy the deficiencies. The Performance Assurance is not considered released until the County has issued a written release of such Performance Assurance. Release of the Performance Assurance shall be conditioned upon:

(A) Substantial completion of the construction;

(B) Receipt by the Department of a certificate of substantial completion and compliance, and a set of as-built plans incorporating all changes made during construction, prepared by a Texas licensed professional engineer;

(C) Satisfactory completion of all interim and the final inspections by the Department;

(D) Permanent vegetation must be established or financial assurance must be provided to permanently stabilize any remaining areas disturbed during construction;

(E) The Department submittal to the Commissioners Court of an Inspection Report stating that:

(1) the public infrastructure, in its current condition and with no repairs, upgrades or improvements, is in compliance with the Regulations, other applicable requirements, and with the construction plans and approved changes, and,

(2) the Department recommends release of the Performance Assurance by the Commissioners Court; and,

(F) Approval of release of the Performance Assurance by the Commissioners Court.

Sub-Chapter 3 - Acceptance of Public Infrastructure for Maintenance

§3.01. Owner's Maintenance Responsibility

The Applicant or Permittee shall remain responsible for all maintenance and repair of planned public infrastructure and related improvements associated with a development until the County formally accepts the obligation to maintain such public infrastructure. The County's issuance of a Development Authorization or the acceptance of a Final Plat or dedication of the right-of-way for a public roadway shall not be deemed to constitute acceptance of the public infrastructure for maintenance.

DRAFT

(45) Map – means the Flood Hazard Boundary Map (FHBM) or the Flood Insurance Rate Map (FIRM) for a community issued by FEMA.

(46) Mean Sea Level - means, for purposes of the National Flood Insurance Program, the North American Vertical Datum (NAVD) of 1988 or other datum, to which base flood elevations shown on a community's Flood Insurance Rate Map are referenced.

(47) New Construction - means, for the purpose of determining insurance rates, structures for which the "start of construction" commenced on or after the effective date of an initial FIRM or after December 31, 1974, whichever is later, and includes any subsequent improvements to such structures. For floodplain management purposes, "new construction" means structures for which the "start of construction" commenced on or after the effective date of a floodplain management regulation adopted by a community and includes any subsequent improvements to such structures.

(48) New Manufactured Home ~~Park~~ Rental Community or Subdivision - means a manufactured home park or subdivision for which the construction of facilities for servicing the lots on which the manufactured homes are to be affixed (including at a minimum, the installation of utilities, the construction of streets, and either final site grading or the pouring of concrete pads) is completed on or after the effective date of floodplain management regulations adopted by a community.

(49) Non-habitable Structure - means a structure that is not suitable or intended for human habitation.

(50) Participating Community – means a community in which FEMA has authorized the sale of flood insurance. Also known as an eligible community.

(51) Principally Above Ground – mean that at least 51 percent of the actual cash value of the structure is above ground.

(52) Recreational Vehicle - means a vehicle which is:

(1) built on a single chassis;

(2) 400 square feet or less when measured at the largest horizontal projections;

(3) designed to be self-propelled or permanently towable by a light duty truck; and,

(4) designed primarily not for use as a permanent dwelling but as temporary living quarters for recreational, camping, travel, or seasonal use.

(5) Does not exceed the legal size or weight limits required for an oversize/overweight(OS/OW) permit and route from the TxDMV to travel on Texas roads.

Comment [CH52]: This addition removes very large "Tiny Houses" from the overall category of "recreational vehicles". Exceedingly large "Tiny Houses" are not able to be moved by a light duty truck.

(53) Reasonably safe from flooding – means base flood waters will not inundate the land or damage structures to be removed from the SFHA and that any subsurface waters related to the base flood will not damage existing or proposed buildings.

(54) Repetitive Loss – means flood-related damages sustained by a structure on two separate occasions during a 10-year period ending on the date of the event for which the second claim is made, for which the cost of repairs at the time of each such flood event, on the

DRAFT

average, equaled or exceeded 25% of the market value of the structure before the damages occurred.

(55) Regulatory Floodway - means the channel of a river or other watercourse and the adjacent land areas that must be reserved in order to discharge the base flood without cumulatively increasing the water surface elevation more than a designated height.

(56) Riverine – means relating to, formed by, or resembling a river (including tributaries), stream, brook, etc.

(57) Special Flood Hazard Area – see "Area of Special Flood Hazard" – means an area having special flood hazard and shown on an FHBM or FIRM as Zone A, AO, A1-30, AE, AH, A99, or AR,.

(58) Start of Construction - (for other than new construction or substantial improvements under the Coastal Barrier Resources Act (Pub. L. 97-348)), includes substantial improvement and means the date the building permit was issued, provided the actual start of construction, repair, reconstruction, rehabilitation, addition placement, or other improvement was within 180 days of the permit date. The actual start means either the first placement of permanent construction of a structure on a site, such as the pouring of slab or footings, the installation of piles, the construction of columns, or any work beyond the stage of excavation; or the placement of a manufactured home on a foundation. Permanent construction does not include land preparation, such as clearing, grading, and filling; nor does it include the installation of streets and/or walkways; nor does it include excavation for basement, footings, piers, or foundations or the erection of temporary forms; nor does it include the installation on the property of accessory buildings, such as garages or sheds not occupied as dwelling units or not part of the main structure. For a substantial improvement, the actual start of construction means the first alteration of any wall, ceiling, floor, or other structural part of a building, whether or not that alteration affects the external dimensions of the building.

(59) Structure – means, for floodplain management purposes, a walled and roofed building, including a gas or liquid storage tank, that is principally above ground, as well as a manufactured home.

(60) Substantial Damage - means damage of any origin sustained by a structure whereby the cost of restoring the structure to its before damaged condition would equal or exceed 50 percent of the market value of the structure before the damage occurred.

(61) Substantial Improvement - means any reconstruction, rehabilitation, addition, or other improvement of a structure, the cost of which equals or exceeds 50 percent of the market value of the structure before "start of construction" of the improvement. This term includes structures which have incurred ~~"repetitive loss" or~~ "substantial damage," regardless of the actual repair work performed. The term does not, however, include either: (1) any project for improvement of a structure to correct existing violations of state or local health, sanitary, or safety code specifications which have been identified by the local code enforcement official and which are the minimum necessary to assure safe living conditions, or (2) any alteration of a "historic structure," provided that the alteration will not preclude the structure's continued designation as a "historic structure."

Comment [CH53]: This would let homeowners decide if they want to continue living in a house that has been flooded more than once. It is a very subjective decision for us to declare 25% damage on a structure twice in a 10 year period. From the 2015 floods we have seen repair estimates to houses that are right next to each other vary by 50%.

DRAFT

requirement must either be certified by a Texas registered professional engineer or Texas licensed architect or meet or exceed the following minimum criteria:

(1) A minimum of two openings on separate walls having a total net area of not less than 1 square inch for every square foot of enclosed area subject to flooding shall be provided.

(2) The bottom of all openings shall be no higher than 1 foot above the floor or bottom of the interior of the enclosed structure

(3) Openings may be equipped with screens, louvers, valves, or other coverings or devices provided that they permit the automatic entry and exit of floodwaters.

(D) Manufactured Homes -

(1) Require that all manufactured homes to be placed within Zone A on a community's FHBM or FIRM shall be installed using methods and practices which minimize flood damage. For the purposes of this requirement, manufactured homes must be elevated such that the lowest floor of the manufactured home is elevated to at least one (1) foot above the base flood elevation and anchored to resist flotation, collapse, or lateral movement. Methods of anchoring may include, but are not limited to, use of over-the-top or frame ties to ground anchors. This requirement is in addition to applicable State and local anchoring requirements for resisting wind forces.

Comment [CH54]: Additional language clarifies that manufactured homes be elevated above the BFE, not simply elevated above ground level.

(2) Require that manufactured homes that are placed or substantially improved within Zones A1-30, AH, and AE on the community's FIRM, be elevated on a permanent foundation such that the lowest floor of the manufactured home is elevated to at least one (1) foot above the base flood elevation, and be securely anchored to an adequately anchored foundation system to resist flotation, collapse, and lateral movement, ~~on all sites~~:

~~(a) Outside of a manufactured home park or subdivision;~~

~~(b) In a new manufactured home park or subdivision;~~

~~(c) In an expansion to an existing manufactured home park or subdivision; or,~~

~~(dIn an existing manufactured home park or subdivision on which a manufactured home has incurred "substantial damage" as a result of a flood.~~

~~(3) Require that manufactured homes be placed or substantially improved on sites in an existing manufactured home park or subdivision with Zones A1-30, AH, and AE on the community's FIRM that are not subject to the provisions of Section §735.5.02(D)(2) be elevated so that either:~~

~~(a) The lowest floor of the manufactured home is at or above the base flood elevation; or,~~

~~(b) The manufactured home chassis is supported by reinforced piers or other foundation elements of at least equivalent strength that are no less than 36 inches in height above grade and be securely anchored to an adequately anchored foundation system to resist flotation, collapse, and lateral movement.~~

Comment [CH55]: This will ensure that all new manufactured homes in the 100 year floodplain are elevated, regardless of whether or not they're located within a subdivision or MH rental community.

DRAFT

(E) Recreational Vehicles - Require that recreational vehicles placed on sites within Zones A, A1-30, AH, and AE on the community's FIRM either (i) be on the site for fewer than 180 consecutive days, or (ii) be fully licensed and ready for highway use, or (iii) meet the permit requirements of Section §735.4.03, and the elevation and anchoring requirements for "manufactured homes" in Section §735.5.02(D)(2). A recreational vehicle is ready for highway use if it is on its wheels or jacking system, is attached to the site only by quick disconnect type utilities and security devices, and has no permanently attached additions.

Comment [CH56]: This Zone needs to be added, since it is 100 year floodplain.

(F) Fences in Special Flood Hazard Area

(1) Exempted Fencing -- –No Flood Hazard Area Permit is required for open pipe, rail, or wire fencing that is 90% "open" and that have posts less than 14" diameter placed no closer than 8-feet apart.

(2) Non Exempt Fencing-- any proposed fence in a 100-year floodplain that is not an exempt fence is considered to be development and requires issuance of a Flood Hazard Area Permit.

(3) Any fencing that crosses a stream channel must be designed and constructed so that it will break away or collapse to allow discharge of flood waters.

(4) On a navigable stream or river a property owner must comply with the Texas Parks and Wildlife Code so that public recreational use is not limited, obstructed, restricted, or interfered with.

§5.03. Standards for Subdivision Proposals

(A) All subdivision proposals including the placement of manufactured home parks and subdivisions shall be consistent with this Chapter and shall be approved by the County Floodplain Administrator prior to issuance of the Development Authorization by the County. Plat specifications and details for submission will be governed by Chapter 705 and other applicable provisions of these Regulations.

(B) All proposals for the development of subdivisions including the placement of manufactured home parks and subdivisions shall meet the requirements this Chapter.

(C) Base flood elevation data shall be generated for subdivision proposals and other proposed development including the placement of manufactured home parks and subdivisions which ~~is~~ are greater than 50 lots or 5 acres, whichever is lesser, if not otherwise provided pursuant to this Chapter.

(D) All subdivision plats shall have the Floodplain and Floodway clearly delineated on the plat and, where appropriate, shall have the lowest floor elevations for all lots located within Flood Hazard Areas. Finish floor elevations and floodway will not be required if Floodplain is contained within a drainage easement prohibiting development.

(E) All subdivision Applications including the placement of manufactured home parks and subdivisions shall include provisions for adequate drainage as required under Chapter 725, to reduce exposure to flood hazards.

(F) All subdivision Applications including the placement of manufactured home parks and subdivisions shall have public utilities and facilities such as sewer, gas, electrical and water systems located and constructed to minimize or eliminate flood damage.

DRAFT

Sub-Chapter 4 - Minimum Standards

§4.01. Internal Roadways and Storm Water Management Facilities

All internal roadways and associated storm water management facilities shall be designed and constructed to ~~minimum~~ such a standard~~s~~ that are reasonably necessary to permit ingress and egress access by fire and emergency vehicles as designed by a Texas licensed professional engineer. The drainage facilities shall not be required to exceed the standards and specifications for subdivisions, as set forth in Chapter 750 of these Regulations.

Comment [CH57]: Language added to display Hays County wants more than just the minimum.

§4.02. Communities Served by On-Site Sewage Facilities

All developments to be served by On-Site Sewage Facilities shall comply with the TCEQ Regulations (specifically 30 TAC §285.4, "Facility Planning," and 30 TAC §285.5, "Submittal Requirements for Planning Materials") and the Hays County On-Site Sewage Facilities rules.

Sub-Chapter 5 - Requirements Prior to Occupancy

The Department shall inspect all roadways and associated storm water management structures for compliance with these minimum standards. Tenants may not occupy rental spaces until all construction requirements of the infrastructure plan have been approved and completed.

Sub-Chapter 6 - Public Notice

§6.01. Notice Required

All Applications seeking approval from the County for a Manufactured Home Rental Community shall be required to notify the public using posted notice, written notice, and published notice.

§6.02. Posted Notice

The Applicant shall be required to notify the public upon submission of an Application under this Chapter in accordance with the requirements for Posted Notice in §701.9.04. The signs shall contain the following header text:

NOTICE OF APPLICATION FOR MFG. HOME RENTAL COMMUNITY

The signs shall contain the following notice text:

> An application has been filed with HAYS COUNTY to develop a manufactured home rental community on this property. Information regarding the application may be obtained from:

This text shall be followed with the name and contact information of the Department and the tracking number assigned by the Department to the Application.

§6.03. Written Notice

The Applicant shall be required to notify affected political subdivisions and property owners in the proximity of the Subject Property upon submission of an application under this Chapter in accordance with the requirements for Written Notice in §701.9.05. In addition to the items required under §701.9.05, the notice must include, at the minimum, the following information:

(A) The maximum number of rental units to be located at the subject property;

DRAFT

AGENDA ITEM REQUEST FORM

Hays County Commissioners Court

Tuesdays at 9:00 AM

Request forms are due in Microsoft Word Format via email by 2:00 p.m. on Wednesday.

AGENDA ITEM

Discussion and possible resolution of the Hays County Commissioners Court regarding the creation of one additional Judicial District Court and one additional County Court-at-Law for Hays County in the upcoming 85th legislative session.

ITEM TYPE	MEETING DATE	AMOUNT REQUIRED
ACTION-MISCELLANEOUS	February 21, 2017	TBD

LINE ITEM NUMBER

AUDITOR USE ONLY

AUDITOR COMMENTS:

PURCHASING GUIDELINES FOLLOWED: N/A **AUDITOR REVIEW:** N/A

REQUESTED BY	SPONSOR	CO-SPONSOR
	COBB	CONLEY

SUMMARY

See the attached, proposed resolution, as well as letters of support from stakeholders in the community.

Resolution of the Hays County Commissioners Court
Regarding Creation of Courts within Hays County

WHEREAS, Hays County last saw the creation of a County Court-at-Law during the 70th Legislative Session in 1987 with the creation of the Hays County Court-at-Law No. 2, and Hays County last saw the creation of a District Court within its jurisdiction during the 79th Legislative Session in 2005 with the creation of the 428th Judicial District Court of Hays County; and

WHEREAS, over the last decade the Hays County Commissioners Court and the Judges of Courts within Hays County have collaborated to identify and implement efficiencies within the Courts system as a whole; and

WHEREAS, despite the implementation of efficiencies, Hays County continues to experience steady population growth and burdens on both criminal and civil case loads; and

WHEREAS, the current District Judges and County Court-at-Law Judges have voiced support for the creation of Courts to assist in relieving the burdens on caseloads; and

WHEREAS, members of the Hays County Bar Association have also voiced support for the creation of an additional County Court-at-Law; and

WHEREAS, the Hays County Commissioners Court finds it in the best interest of the citizens of Hays County to create one additional County Court-at-Law and one additional Judicial District within Hays County;

NOW, THEREFORE, BE IT RESOLVED that the Hays County Commissioners Court;

1. Supports and requests the creation of a new County Court-at-Law for Hays County during the upcoming 85th Legislative Session, in accordance with the attached draft legislation;
2. Supports and requests the creation of a new Judicial District Court for Hays County during the upcoming 85th Legislative Session, in accordance with the attached draft legislation;

ADOPTED THIS THE 21st DAY OF FEBRUARY, 2017.

_____
Judge Bert Cobb, M.D.
Hays County Judge

_____
Debbie Ingalsbe
Commissioner, Precinct 1

_____
Mark Jones
Commissioner, Precinct 2

_____
Will Conley
Commissioner, Precinct 3

_____
Ray Whisenant
Commissioner, Precinct 4

Attest:

_____
Liz Q. Gonzalez, County Clerk

County Court-at-Law

Section 25.1071, Government Code, is amended to read as follows:

Sec. 25.1071. HAYS COUNTY. Hays County has the following statutory county courts:

(1) the County Court at Law No. 1 of Hays County; ~~and~~

(2) the County Court at Law No. 2 of Hays County~~.~~; and

(3) the County Court at Law No. 3 of Hays County.

District Court

Subchapter C, Chapter 24, Government Code, is amended by adding Section 24.597 to read as follows:

Sec. 24.597. 453RD JUDICIAL DISTRICT (HAYS COUNTY). The 453rd Judicial District is composed of Hays County.

February 17th, 2017

Judge Bert Cobb, M.D.
111 E. San Antonio Street, Suite 300
San Marcos, Texas 78666

Dear Judge Cobb,

We want to thank you for meeting with us last month regarding the current status of District Court dockets within Hays County. We are writing this letter on behalf of all District Judges and County Court-at-Law Judges within Hays County, to voice unanimous support for the creation of one additional County Court-at-Law and one additional Judicial District Court during the upcoming legislative cycle.

You have our assurance that we are doing everything we can to accommodate Hays County's growth, and we believe we have managed it well up to now. This growth, however, does not appear to be slowing in the least. We will see an increased demand on our Courts. That much is inevitable. Creation of two additional Courts would provide the room we need in our dockets to be even more responsive to our increased caseloads.

On behalf of the 274th, 22nd, 207th, and 428th Judicial District Courts, and on behalf of County Courts-at-Law No.1 and No.2, please accept our unanimous support for the creation of one additional County Court-at-Law and one additional Judicial District Court during the upcoming legislative cycle.

Sincerely,

Judge Gary Steel
274th Judicial District Court

Judge Bill Henry
428th District Court

Judge Jack Robison
207th District Court

Judge Robert Updegrove
County Court at Law #1

Judge R. Bruce Boyer
22nd District Court

Judge David Glicker
County Court at Law #2

February 17, 2017

Judge Bert Cobb, M.D.
111 E. San Antonio Street, Suite 300
San Marcos, Texas 78666

Dear Judge Cobb:

I write today to express my support for recommendation to the Legislature to create two additional courts for Hays County, one County Court-at-law and one District Court. I am aware that the district court and county court-at-law judges for Hays County have unanimously urged their support for the proposed new court, as has the Hays County Bar Association, and I would add my endorsement.

As your Honor and the other members of the Commissioners Court know, Hays County has been growing at an unprecedented rate for several years, increasing the need for government services across the board. Hays County's court officials have been working hard to accommodate the resultant pressures on our judicial resources. I agree with the current courts that additional courts are necessary to prepare for the foreseeable rise in caseloads over the next few years.

Please accept my endorsement of the proposed expansion of the Hays County judicial system through the creation of one additional Hays County district court and one additional county court-at-law.

Sincerely,

Wes Mau
Hays County Criminal District Attorney
wes.mau@co.hays.tx.us

October 19, 2016

The Honorable Will Conley
Hays County Commissioner, Precinct 3
P.O. Box 2085
14306 R.R. 12, Suite 11
Wimberley, Texas 78676

Via First Class Mail

Re: Hays County Bar Association Resolution Supporting Creation of Additional Hays County Court at Law.

Dear Commissioner Conley:

On September 6, 2016, the Hays County Bar Association passed a resolution supporting the creation of a third County Court at Law in Hays County. The Bar Association will develop data, through a special committee, to assist and research the need for a new court.

It is with urgency that the Association asks for your support in our effort to better the services provided to citizens of our community.

Respectfully,

Charmaine Wilde
President, Hays County Bar Association
133 W. San Antonio St, Ste. 400
San Marcos, Texas 78666
Phone: 512.618.8778
Email: hayscobar@gmail.com

Enclosure *Hays County Bar Association Resolution, Adopted September 6, 2016*

cc: Senator Donna Campbell, M.D.
The Hon. Jason Isaac, State Representative
The Hon. Bert Cobb, M.D., Hays County Judge
The Hon. Debbie Gonzales Ingalsbe, Hays County Commissioner, Precinct 1
The Hon. Mark Jones, Hays County Commissioner, Precinct 2
The Hon. Ray Whisenant, Hays County Commissioner, Precinct 4

HAYS COUNTY BAR ASSOCIATION

RESOLUTION
(September 6, 2016)

RESOLVED, That the Hays County Bar Association urges all State, County, and local officials to support the creation of a third county court at law in Hays County, Texas.

February 10, 2017

Commissioner Conley-

We understand that the Hays County Bar Association is supporting the creation of an additional district court and county court for Hays County. We would like to wholeheartedly agree with this action. We ask you and the other Commissioners of Hays County to support this effort.

We have seen a large amount of growth in the city of San Marcos and in Hays County in the recent years. This growth has translated into backlogs in the criminal justice system and in the existing courts in our county. Felony and misdemeanor cases are not going to trial in a timely fashion and are often reset numerous times. In a recent instance, a sexual assault case took almost two years to go to trial. This slow process does not serve the victims who are awaiting justice, the offender who wants his day in court or the community efficiently. In addition, law enforcement officers are called repeatedly for trials that do not ever seem to get past the docket.

The creation of additional district and county courts in Hays County would serve to alleviate much of this inefficiency. The time has come in our criminal justice system to expand. Thank you for your consideration.

Respectfully,

Daniel E. Arredondo

San Marcos Police Officer's Association

AGENDA ITEM REQUEST FORM

Hays County Commissioners Court

Tuesdays at 9:00 AM

Request forms are due in Microsoft Word Format via email by 2:00 p.m. on Wednesday.

AGENDA ITEM

Discussion and possible action to authorize the Sheriff's Office to accept the Scope of Work (SOW) from Dynamic Systems, Inc. for a Hot Water Storage Tank replacement at the Jail Facility and amend the budget accordingly.

ITEM TYPE	MEETING DATE	AMOUNT REQUIRED
ACTION-MISCELLANEOUS	February 21, 2017	$13,331

LINE ITEM NUMBER

001-618-03.5719_700

AUDITOR USE ONLY

AUDITOR COMMENTS:

PURCHASING GUIDELINES FOLLOWED: N/A **AUDITOR REVIEW:** MARISOL VILLARREAL-ALONZO

REQUESTED BY	SPONSOR	CO-SPONSOR
Sheriff Gary Cutler	COBB	N/A

SUMMARY

The Sheriff's Jail Division needs to replace the 200 gallon Hot water Storage tank supplying hot water for sinks and showers for the inmates in Quad-C. The current Storage tank is approximately 20+ years old and has a water leak. The Maintenance Director obtained three quotes, with Dynamic Systems coming in with the lowest bid. Also, included in the quote is for the vendor to configure a manual by-pass to isolate the tank for future service.

Attachment: Dynamic Systems, Inc. SOW/Quote

Funds were budgeted during the FY 2017 budget process in County Wide for miscellaneous capital improvements for the Jail as needed.

Budget Amendment:
Decrease Co Wide Misc Capital Improvements - 001-645-00.5741
Increase Jail Misc Equipment - 001-618-03.5719_700

DYNAMIC SYSTEMS, INC.
MECHANICAL CONTRACTORS

January 18, 2017

Hays County Sheriff's Office
1307 Uhland Road
San Marcos, Texas 78666

Attention: Mr. Tom Hackney

Reference: Hays County Sheriff's Office Hot Water Storage Tank

Dear Mr. Hackney,

We are pleased to provide you with our proposal for the HVAC and Plumbing scopes of work for the above referenced project.

Our proposal is based upon information provided on our walk on 1-12-2017.

We have **included** in our proposal:

1. Removal of the old 200 gallon hot water storage tank.
2. (1) New 200 gallon hot water storage tank and associated piping.

We have **assumed** in our proposal:

1. Work indicated on drawings other than mechanical drawings or plumbing drawings is to be by others.
2. Free and beneficial use of project provided cranes and material / man hoists during normal working hours.
3. We are able to enter into a mutually agreeable contract.
4. We have input to the schedule and sequence of the work.
5. We can use permanent pumps for flushing and cleaning operations.

We have **excluded** from our proposal:

1. Sales tax.
2. Bond.
3. Permits and Fees.
4. Overtime Labor.
5. Removal and Replacement of Ceilings.
6. Any Electrical Work.
7. Areaways and grating.
8. Area drainage and containment.
9. Double wall duct.
10. Low voltage wiring.
11. The cost of removing, handling or abating hazardous material.
12. Fire Protection.
13. Concrete/Asphalt replacement and repair.

14. Setting of VFD's (turn over to electrical subcontractor).
15. Disconnects at fire smoke dampers and smoke dampers.
16. Louvers furnished or installed.
17. Duct testing above specified fabrication pressures.
18. Painting of mechanical and/or plumbing systems.
19. Concrete work, including housekeeping pads, grout, fill for inertia bases and curbs around plenums behind louvers.
20. Dewatering.
21. Locating of Existing Utilities.
22. Repair/Replacement of existing services.
23. Haul spoils off site.
24. T-rated fire stopping for mechanical & plumbing systems.
25. Acoustical caulking at wall penetrations.

Material Escalation

If, during the time for performance of the contract, including any extensions, the price of steel, copper or other commodity increases and, as a result, the price of any material, item or component to be installed or necessary for the fabrication and/or installation of any other item, component or portion of the work increases by an amount of up to and including ten percent of the price at the time the contract was entered into, Dynamic Systems, Inc. will absorb and pay the additional cost. If, during the time for performance of the contract, including any extensions, the increase in price of any material, item, or component to be installed or necessary for the fabrication and/or installation of any other item, component or portion of work exceeds ten percent, the Owner agrees to absorb and pay for that portion of the escalation in price which exceeds ten percent of the price at the time the contract was entered into. Notwithstanding any other provision of this contract, the General Contractor or Construction Manager agrees to absorb and pay all material escalation costs during periods of delay to Dynamic Systems, Inc. performance resulting from the General Contractor or Construction Manager fault or negligence.

Our total price for the above scope of work is outlined in the following table:

Base Price	**$12,048**
Add for Insulation of New Pipes	**$1,283**

Our price is valid for 30 days.

Should you have any questions regarding our proposal, please contact me as soon as possible.

Sincerely,

DYNAMIC SYSTEMS, INC.

Christopher Puig
San Antonio - Project Manager

AGENDA ITEM REQUEST FORM

Hays County Commissioners Court

Tuesdays at 9:00 AM

Request forms are due in Microsoft Word Format via email by 2:00 p.m. on Wednesday.

AGENDA ITEM

Discussion and Possible action to authorize the Personal Health Department to offer a salary exception for the Epidemiologist, slot 1142-002 position at the 14th percentile (grade 113) effective March 1, 2017.

ITEM TYPE	MEETING DATE	AMOUNT REQUIRED
ACTION-MISCELLANEOUS	February 21, 2017	$1,874

LINE ITEM NUMBER

120-675-99-094]

AUDITOR USE ONLY

AUDITOR COMMENTS:

PURCHASING GUIDELINES FOLLOWED: N/A **AUDITOR REVIEW:** N/A

REQUESTED BY	SPONSOR	CO-SPONSOR
Garza	INGALSBE	N/A

SUMMARY

The DC&S Director has received an application from a current county employee for the vacant Epidemiologist position and requests the Court's consideration to offer the position at an annualized salary of $48,500, approximately the 14th percentile of the range. Current county policy indicates that an individual within the organization would be moved to the minimum of the new salary or a 6% pay increase for promotions, whichever is greater. The candidate has a degree in microbiology and has all the qualifications to perform the necessary duties as well as enhancing the programs scope. He has been a loyal county employee and would be an asset to this division.

This fiscal impact is $1,874 ($3,748 annualized) including base salary and fringe benefits. Salary savings with the grant funds are available for this request.

AGENDA ITEM REQUEST FORM

Hays County Commissioners Court

Tuesdays at 9:00 AM

Request forms are due in Microsoft Word Format via email by 2:00 p.m. on Wednesday.

AGENDA ITEM

Executive Session pursuant to Sections 551.071 and 551.072 of the Texas Government Code: consultation with counsel and deliberation regarding the purchase, exchange or value of Right of Way along proposed FM110 in Pct. 1. Possible action to follow in open court.

ITEM TYPE	MEETING DATE	AMOUNT REQUIRED
EXECUTIVE SESSION	February 21, 2017	

LINE ITEM NUMBER

AUDITOR USE ONLY

AUDITOR COMMENTS:

PURCHASING GUIDELINES FOLLOWED: N/A **AUDITOR REVIEW:** N/A

REQUESTED BY	SPONSOR	CO-SPONSOR
Kennedy	INGALSBE	N/A

SUMMARY

Summary to be provided in Executive Session.

AGENDA ITEM REQUEST FORM

Hays County Commissioners Court

Tuesdays at 9:00 AM

Request forms are due in Microsoft Word Format via email by 2:00 p.m. on Wednesday.

AGENDA ITEM

Executive Session pursuant to Sections 551.071 and 551.074 of the Texas Government Code: consultation with counsel and deliberation regarding all individual positions within the County Court-at-Law. Possible action may follow.

ITEM TYPE	MEETING DATE	AMOUNT REQUIRED
EXECUTIVE SESSION	February 21, 2017	N/A

LINE ITEM NUMBER

N/A

AUDITOR USE ONLY

AUDITOR COMMENTS:

PURCHASING GUIDELINES FOLLOWED: N/A **AUDITOR REVIEW:** N/A

REQUESTED BY	SPONSOR	CO-SPONSOR
	CONLEY	N/A

SUMMARY

SUMMARY TO BE PROVIDED IN EXECUTIVE SESSION

AGENDA ITEM REQUEST FORM

Hays County Commissioners Court

Tuesdays at 9:00 AM

Request forms are due in Microsoft Word Format via email by 2:00 p.m. on Wednesday.

AGENDA ITEM

Executive Session pursuant to Sections 551.071 and 551.072 of the Texas Government Code: consultation with counsel and deliberation regarding the purchase, exchange, lease or value of real property owned by Hays County. Possible action to follow in open court.

ITEM TYPE	MEETING DATE	AMOUNT REQUIRED
EXECUTIVE SESSION	February 21, 2017	

LINE ITEM NUMBER

AUDITOR USE ONLY

AUDITOR COMMENTS:

PURCHASING GUIDELINES FOLLOWED: N/A **AUDITOR REVIEW:** N/A

REQUESTED BY	SPONSOR	CO-SPONSOR
Cobb	COBB	N/A

SUMMARY

Summary to be provided in Executive Session.